RTS INTERCOM SYSTEMS

PRODUCT CATALOG

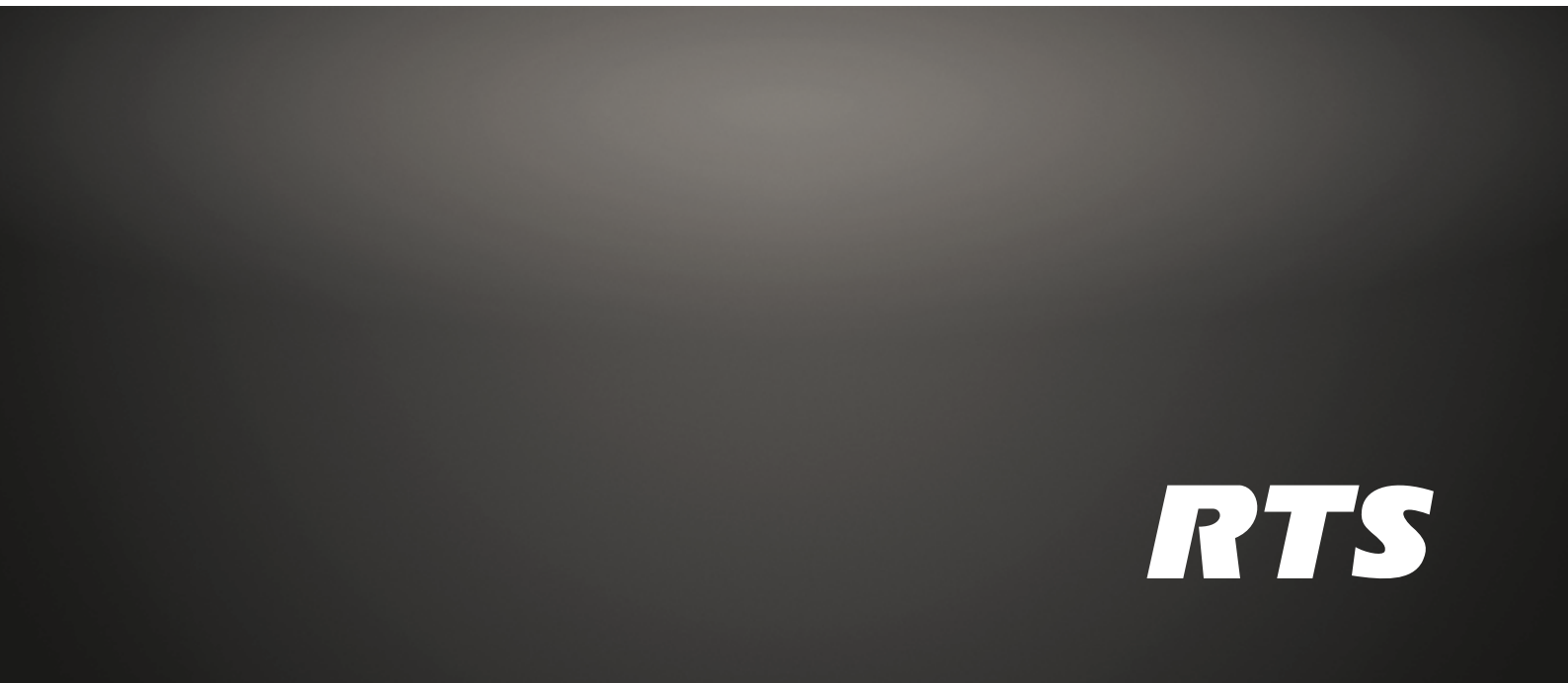

TABLE OF CONTENTS

Preface 3
RTS Core Technologies 4

DIGITAL MATRIX 8–41
- Intercom Matrices 10
- OMNEO 13
- OEI-2 & ARNI 14
- Interface & Controller Cards 15
- RVON VoIP Devices & Breakout Panels 17
- Card Comparison 18
- KP-Series Keypanels 20
- Color Series Keypanels 30
- Premiere Control & Monitoring Partners 33
- Software 34
- System Peripherals 35
- FMI-4 & FMI-8 Multiplexers 37
- RTS VLink 38
- Trunking 39
- Trunkmaster 40
- Tri-Bus Multi-Frame Topology 40

WIRELESS INTERCOM 42–47
- ROAMEO Cellular DECT-Based Wireless Intercom System 43

WIRELESS PARTYLINE 48–61
- BTR-700 49
- BTR-800 51
- BTR-80N 53
- UHF Accessorie 55
- Combiner/Splitter 56
- UHF Frequency Band Chart 58
- BTR-240 59
- TT-16 & TR-16 60

WIRED PARTYLINE 62–72
- Power Supply 63
- Master Station 64
- User Stations 65
- Universal Beltpacks 67
- Beltpacks 68
- IFB System Peripherals 69
- Accessories 70
- AudioCom 72

HEADSETS 73–82
- Lightweight 74
- Premium Lightweight 76
- Medium Weight 77
- Monitor Headphones 79
- Under Helmet 79
- Accessories 80
- Earsets 81

Applications 83–87
Product Specifications 88

PREFACE

“IT HAS ALWAYS BEEN AN UNBEARABLE THOUGHT TO ME THAT SOMEONE COULD INSPECT ONE OF MY PRODUCTS AND FIND IT INFERIOR IN ANY WAY. FOR THAT REASON I HAVE CONSTANTLY STRIVEN TO PRODUCE PRODUCTS WHICH WITHSTAND THE CLOSEST SCRUTINY – PRODUCTS WHICH PROVE THEMSELVES SUPERIOR IN EVERY RESPECT.”

Robert Bosch, 1918

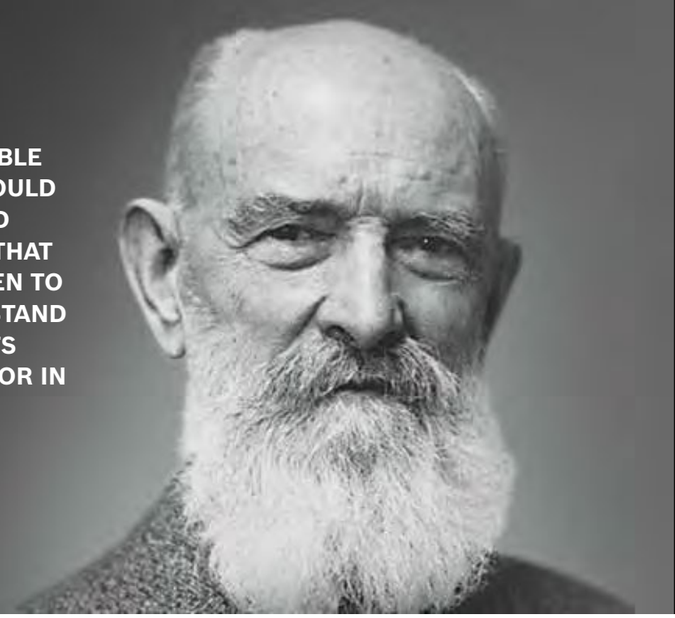

RTS is an industry leader in the design and manufacture of intercom solutions, with over 40 years’ experience in the market. From the Advanced Digital Audio Matrix (ADAM) systems used to coordinate major network broadcasts of the world’s largest events to small-format systems used for in-house productions, RTS is dedicated to innovating the future of global communications.

With its acquisition in 2006, RTS became part of the Business Unit Communications Systems of Bosch Security Systems, a leading global supplier of security, safety and communications products.

Our customer focus and industry expertise is reinforced on a global scale as part of the Bosch Group, which counted 375,000 associates and 276 manufacturing sites in 2015, ensuring continuity, innovation and the highest quality standards.

BOSCH

RTS CORE TECHNOLOGIES

OMNEO, RVON, TRUNKING, AIO AUDIO, KEYPANEL, WIRELESS INTERCOM

OMNEO IP technology

OMNEO is an architectural approach to connecting devices that need to exchange information such as audio content or device control. Built upon multiple technologies, including IP and open public standards, OMNEO supports the technologies of today - such as Audinate's Dante - while adopting the standards of tomorrow. OMNEO offers a professional-grade media networking solution that provides interoperability, unique features for easier installation, better performance, and greater scalability than any other IP offering on the market. RTS products that use OMNEO support Dante media networking and the AES67 standard for IP audio transport. Another important standard within OMNEO is AES70, also known as Open Control Architecture (OCA) which is a communications protocol architecture for control, monitoring and connection management for media networks. ADAM Series matrices can be easily retrofitted with the OMNEO Matrix Interface (OMI) card. OMNEO is supported by the ROAMEO wireless matrix system, as well as all KP-Series keypanels, with the exception of the analog KP-3016A keypanel.

RVON (RTS Voice Over Network)

RVON is a solution for establishing intercom audio over long distance. One of four user-selectable voice encoders – codecs – is used to compress digital audio to a low bitrate suitable for transmission over internet. Bitrates range from 5.3 kbit/s all the way up to 64 kbit/s. The high compression audio codec is intended for long-distance satellite transmissions, whereas the low compression codec is commonly used when high internet bandwidth is given. With RVON, a matrix can communicate with another RVON-enabled matrix or keypanel anywhere in the world. RVON is available for the ADAM Series matrix as well as for Cronus matrices, and compatible with the KP-Series keypanels. The firmware to run RVON on a KP-Series keypanel is available at the RTS website as free download.

Trunking

Trunking allows networked matrices to be tied together seamlessly. A central node, the Trunkmaster, finds the best possible path for each audio connection, from the originating matrix to its destination, and possibly traversing another matrix on the way. This increases the network availability and allows for more efficient use of transmission resources. The largest trunked network in the world – a major US broadcaster – has been using RTS Trunking for two decades. A trunked network can be expanded virtually without limits: Trunking can grow up to 225,000 ports and is supported by all RTS matrices.

AIO Audio

An analog Input Output (AIO) card establishes a bidirectional link to send and receive analog audio between matrix and keypanels. Each audio connection uses a twisted pair of wires, and the electrical signal is electronically balanced. This allows analog audio to be sent over long distance without noise or other audio artifacts. AIO is supported by all RTS keypanels, including legacy panels. AIO can use an RJ12 or an RJ45 connector.

Keypanel Legacy Support

Keypanels often represent a big investment in an intercom system. Our legacy keypanels work on our new matrix products, this remains the guiding principle for our product development. AIO is the enabling audio and control signal format.

Keypanels Ergonomics and Features

A wired intercom system allows communication by using keypanels. Keypanels comprise a front microphone, a loudspeaker, and either lever keys or buttons for talk/listen control. RTS has developed and sold keypanels since more than 40 years – and we learned what ergonomics mean for professional intercom users. The latest generation of keypanels, the KP-Series, has set a new industry standard for design and usability. KP-Series comes with more features and selectable options than any other keypanel on the market. There is also optional software available for users in need of enhanced functions. An audio software package provides five advanced functions for users who wish to customize their audio. A control software package includes five additional features for enhanced control, including the Supervisor Mode (also known as Keypanel Mirroring).

Wireless Intercom

The VHF and UHF frequencies are used for full duplex wireless partyline communications. Two digital standards, WiFi and DECT, are also available. The new DECT-based system ROAMEO connects to the matrix using the OMNEO Matrix Interface, OMI, which is the same card used for all other OMNEO and third-party Dante-compatible devices. RTS also has a long tradition of industry-standard solutions for high-quality audio using analog technology. Systems typically consist of a base station and four beltpacks. Each system has two channels. The base station has two AIO connectors which are used to communicate to the matrix. Current products include the BTR-800, BTR-80N, and BTR-700. RTS closely monitors FCC frequency changes to make sure our BTR products can be used in the future. For older products, a rebanding program is available to give customers peace of mind.

DIGITAL MATRIX

INTERCOM MATRICES, INTERFACE CARDS, KEYPANELS, SOFTWARE & PERIPHERALS

INTERCOM MATRICES

The RTS family of digital intercom matrices is the most extensive, widely used line of intercoms in the world. From the top-of-the-line ADAM matrix, available in sizes from 16 to more than 880 users, to the Zeus III LE 16-port matrix, RTS matrices are the standard for reliable, mission-critical communications in broadcast, military, industrial and entertainment applications.

Intercom matrices at a glance

Attribute	ADAM	ADAM-M	Cronus	Zeus III	Zeus III LE+
Port Capacity: Single Frame More with 64-Channel MADI and OMNEO card(s)	272 Full OMNEO 880 channels	128 Full OMNEO 512 channels	32	32	16
Rack Units	7	3	2	1	1
Redundant Power Supplies	Yes	Yes	Yes	Yes	Yes*
Redundant Controllers	Yes	Yes	No	No	No
Bus Expansion	Yes	Yes	Yes, 4x Cronus, linking license required	No	No
Link Method	Single Mode Fiber or Multi Mode Fiber	Single Mode Fiber or Multi Mode Fiber	Coax/Fiber between Cronus Frames	N/A	N/A
Cable Length	TBX fiber single mode 40 km Multi mode 550 m	TBX fiber single mode 40 km Multi mode 550 m	Coax: 90 m Fiber : 15 km Single mode	N/A	N/A
Audio Bits	24	24	24	24	24
VOX on Input	Yes	Yes	Yes	Yes	Yes
OMNEO Audio	Yes	Yes	No	No	No
Trunking Support	Yes	Yes	Yes	Yes	Yes
Matrix PC Connection	Ethernet, Serial	Ethernet, Serial	Ethernet, Serial, USB	Ethernet, Serial, USB	Ethernet, Serial, USB
Non-Destructive Download	Yes	Yes	Yes	Yes	Yes
Integrated Partyline Interface	No	No	No	Yes (2)	Yes (2)
Remote Configuration	Yes	Yes	Yes	Yes	Yes
Relays	External GPIO-16	External GPIO-16	4	2	2

* Also available with non-redundant power supplies (Zeus III LE)

ADAM

7RU Advanced Digital Audio Matrix

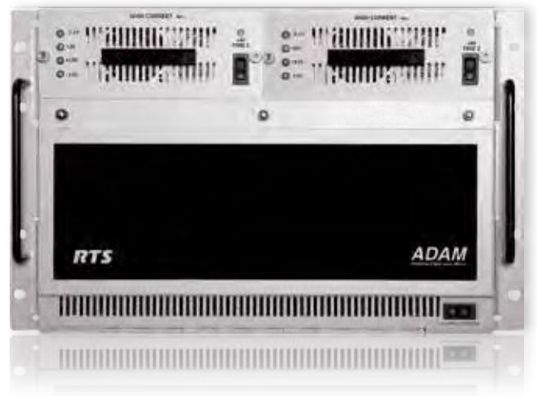

Using a Time Division Multiplex (TDM) technique, ADAM grows linearly as users are added; the system comes standard with newly redesigned, redundant high-current power supplies. The Ethernet master controller, MCII-E, allows for automatic changeover in the event of failure. With the added convenience of Ethernet connectivity between the ADAM intercom and a PC running AZedit matrix control software, it can support 32 simultaneous AZedit sessions via Ethernet and three sessions via serial.

ADAM-M

3RU Advanced Digital Audio Matrix

The 3RU matrix frame supports eight interface cards, in addition to redundant master controller cards. In keeping with the RTS principle of backward compatibility, forward thinking, the ADAM-M is fully compatible with all current ADAM cards, including the MADI-2 and OMNEO 16 interface. Users now have the option of configuring a very compact frame with RVON, MADI, OMNEO and analog with full redundancy.

Cronus

DSP Matrix Intercom

RTS Cronus intercom is a modular, 32-port digital matrix intercom in 2RU that can hold up to four AIO analog or RVON-C VoIP cards with eight ports each, based on advanced DSP architecture. Cronus intercom has the ability to link up to four units into a single 128-port matrix. The Cronus can be preconfigured for fiber with a connection up to 9.3 mi (15 km) or coax for a connection up to 300' (90 m). When connected as a single matrix, individual Cronus intercom controls remain autonomous and independent at each matrix for the highest reliability. Cronus is available with an analog card or the RVON-C VoIP card.

Zeus III

Digital Intercom Matrix

Zeus III is the next generation of compact intercom system units, giving compact systems more options for their intercom configurations. Zeus III has 32 channels in/out and two additional configurable partyline interface channels. Its compact size is perfect for environments with limited space. With integrated Ethernet, Zeus III can be configured from virtually anywhere on the network using AZedit software. Alternatively, Zeus III can be directly connected to AZedit via a USB connector on the front panel. The system has 32 standard RJ45 connectors, making it easier to connect the intercom system with audio lines and keypanels by keeping the RTS wiring scheme.

Zeus III LE and Zeus III LE+

Digital Intercom Matrix

Zeus III LE is a compact intercom matrix providing a wide range of configuration options. Zeus III LE has 16 channels in/out and two additional configurable partyline interface channels. Its compact size is perfect for environments with limited space. With integrated Ethernet, Zeus III LE can be configured from virtually anywhere on the network using AZedit software. Alternatively, Zeus III LE can be directly connected to AZedit via a USB connector on the front panel. The system has 16 standard RJ45 connectors, making it easier to connect the intercom system with audio lines and keypanels by keeping the RTS wiring scheme. The Zeus III LE+ contains all of the same features as the Zeus III LE with the ability to provide the user with redundant AC power supplies for an added level of reliability.

OMNEO

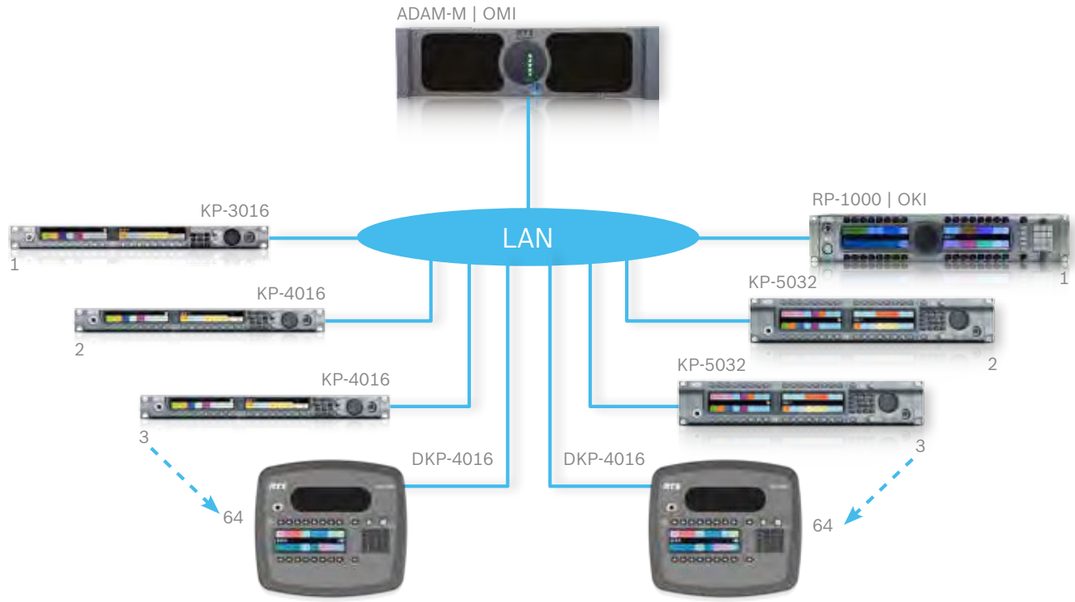

...WITH PURE IP CONNECTIVITY, ULTRA-LOW LATENCY AND FULL HD AUDIO

The OMNEO media networking architecture allows the transport and easy control of media, control, and other data over IP networks. OMNEO provides the highest levels of audio quality as well as synchronization whilst ensuring lowest levels of latency in a highly reliable and secure set up at competitively low system cost due to the use of standard IT components and lower installation as well as maintenance cost.

OMNEO is based on two key components – media transport and control data. Technologies such as Dante from Audinate Pty for transport and AES70, also known as OCA (Open Control Architecture), for control are fully supported within OMNEO.

Products with OMNEO onboard are enhanced by Bosch specific features. OMNEO provides extensive interoperability, flexibility, reliability and future-proof technology by utilizing an open public standards. These technologies provide a number of options for the interconnection of equipment from different manufacturers to exchange control and media content. Additionally, OMNEO provides numerous advanced features and tools to support mission-critical system applications. Systems using the OMNEO media networking architecture can be scaled to include up to 10,000 nodes and can interoperate across multiple IP subnets and long distance for complex network designs and applications.

For those asking if RTS supports TCP/IP, the quick answer is yes. We began our TCP/IP support with our RVON (RTS Voice Over Network) product starting in 2002. With our introduction of OMNEO we have added to our portfolio of IP products and embracing additional industry standard IP based products. RTS Intercoms uses Audinate's DANTE IP based product as the basis for OMNEO.

OMNEO	• Special control for BOSCH products • OMNEO supports DANTE using industry standard routers and switches
Audinate's DANTE	• Runs on top of TCP/IP using industry standard routers and switches
TCP/IP	• Uses industry standard routers and switches

OEI-2 & ARNI

OEI-2

OMNEO External Interface – 2

The OEI-2 enables connectivity between analog audio sources or legacy RTS keypanels and an OMNEO network. OMNEO sets the standard for the future of audio communications by offering high quality IP compatible audio, ultra low latency, and supports DHCP and Bonjour protocols. OEI-2 supports all RTS analog keypanels.

- Provides an interface between legacy RTS keypanels and the OMI OMNEO interface cards for ADAM and ADAM-M units.
- Provides less than 2 ms of audio latency in typical network installations.
- Provides a frequency response of 20Hz to 20KHz to the keypanel
- Supports DHCP and device discovery for easy set up and network management.
- Supports a fiber connection to the keypanel (multi-mode or single-mode optional).
- Supports CAT-5/5e and CAT-6 with dual Ethernet connectors for device looping.
- Supports compatibility with third-party Dante products.

ARNI G2

Audio Routed Network Interface

ARNI significantly extends the reach of an OMNEO-based RTS intercom network to function seamlessly across subnets. ARNI enhances the flexibility of system deployments by providing network services and network-wide synchronization for OMNEO traffic. ARNI may also be configured for fully redundant operation to ensure network reliability and stability. ARNI allows the creation of media networks that are able to support up to 10,000 devices across 40 subnets.

Two models are available: the ARNI-S and the ARNI-E. Depending on the size and configuration of the network, multiple ARNI devices can be deployed to achieve the desired network layout and functionality.

- ARNI S is used when more than 128 OMNEO/DANTE devices are being used in a single subnet. It increases this subnet to up to 450 devices.
- If multiple (up to 40) subnets are used across a large campus or different location, ARNI E will support OMNEO over multiple subnets. It allows synchronization across these subnets.
- ARNI E and ARNI S are required when multiple subnets will support more than 450 and up to 10,000 OMNEO/DANTE devices.

INTERFACE & CONTROLLER CARDS

RTS interface cards are the core of the modular digital matrix intercom concept. An array of features and connectivity options allow users to customize their ADAM matrix to integrate seamlessly into a cohesive communication network. Each new generation provides expanded possibilities for existing ADAM frames, solidifying its investment value for years to come. With features such as hot swap and user allocated ports, the ADAM subassemblies ensure that users can scale their intercom systems to fit their growing needs with peace of mind.

ADAM

AIO-16A

16-Port Analog I/O
for ADAM Series

The AIO-16A card provides 16 ports of bi-directional analog audio plus RS-485 control data. Each AIO-16A is composed of a front card and a back card. Two back cards are available, MDR and SCSI. The AIO-16A uses the latest FPGA technology, which utilizes about half of the power of the older AIO-16 card. This is advantageous in applications where cooling is a consideration.

MADI-2

Multichannel Audio
Digital Interface Card

The MADI-2 card expands the ADAM system configuration capabilities by utilizing MADI (Multichannel Audio Digital Interface) technology to connect any AES-10 compliant devices over coaxial or fiber connections at sampling rates of 44.1 kHz and 48 kHz. Unlike the RVON devices, the MADI-2 has a point-to-point configuration, which provides for little or no delay in the transmission of audio across lines. The MADI card now has cross point volumne control and reduced power consumption.

Cronus-AIO

8-Port AIO card for Cronus

The Cronus-AIO card supports eight ports of bi-directional analog audio. Includes one front card and one RJ-12 or MDR rear card. The MDR rear card allows relocation of the DB9 or RJ12 breakout panels for easier cable management. The Cronus matrix can accept up to four Cronus-AIO cards, for a total of 32 ports. Up to four Cronus matrices can be linked, for a total of 128 ports. A copy of the linking software is required for each Cronus matrix frame in the system.

RVON-C

8-Port VoIP card for Cronus

This card provides eight individually addressable analog bidirectional audio channels converted to TCP/IP based VoIP to distribute matrix audio over long distance and across subnets. RVON provides excellent audio. Users may select the bitrate. Four bitrates are available (in kbit/s) : 5.3, 6.3, 8, and 64. The two lower rates may be used for RVON over satellite connections. With the RVON-C card, the Cronus matrix can communicate to another RVON-enabled keypanel or matrix, anywhere in the world.

MCII-E

Ethernet Master Controller Card Kit for ADAM

The Ethernet connectivity of the MCII-E enables multiple AZedit sessions and remote peripherals, such as the GPIO-16 (see page 22). Adding Ethernet connectivity between the ADAM intercom and a PC running AZedit matrix control software, the new controller can support up to 35 simultaneous AZedit sessions. Using a pair of MCII-E controller cards provides full redundancy with seamless automatic changeover upon failure. The MCII-E also supports SNMP, the IETF standard protocol for monitoring network-attached devices.

TBX-2

Triple-Bus Expander for ADAM Series

The Triple-Bus Expander allows up to four ADAM Series matrices to be interconnected in a ring or mesh topology, using high-speed optical fiber. An interconnected system behaves as a single matrix with up to 880 ports. The TBX-2 is fully backward compatible with all existing AES, AIO, and RVON cards in the ADAM intercom product line. Each TBX-2 card has three fiber links, capable of supporting a maximum of 256 bi-directional audio channels per link. The interconnected system will reconfigure itself in the event of a frame failure. If the master frame fails, another ADAM frame within the system takes over and becomes the master frame. This fail-safe mechanism monitors audio, control and messaging to prevent any corrupt behavior in the system.

OMI

ADAM Matrix Card

This card fits into the standard slots of the RTS ADAM or ADAM-M frames and provides a gateway to the world of OMNEO IP-compatible networking. The card consists of the traditional ADAM front and back card components and enhances ADAM systems with the following features:

- The OMI card is available in configurations up to 64 bidirectional ports upgradable in increments of 16 ports on a single card.
- In addition to the standard RJ45 Ethernet connection, fiber connectivity is also supported with the addition of optional single mode or multimode modules.
- A fully configured single compact ADAM-M frame can support up to 512 (8x OMI 64) OMNEO ports, providing a highly compact single frame solution for many system installs.
- The ADAM frame supports an astounding 880 OMNEO ports, making it ideal for larger systems without the need for frame-to-frame linking.

RVON-16

16-Port VoIP card for ADAM Series

RVON, or RTS Voice Over Network, provides the ADAM Series with a solution for distributing bi-directional audio over long distances and across subnets. In a typical application, the RVON-16 card would connect to a switch, which in turn connects to the customer's TCP/IP based network. After the IP-addresses have been configured, ADAM can communicate to another RVON-enabled keypanel or matrix, anywhere in the world, with excellent audio quality. RVON has user-selectable codecs, with the following four bitrates available (in kbit/s) : 5.3, 6.3, 8, 64. The two lower bitrates allow RVON over satellite connections. It provides a single RJ-45 Ethernet connection for use with a 10 BASE-T or 100 BASE-TX network. It also has two DB-9 serial connections for RS-232 or RS-485 pass-thru port connections. The RVON-16 supports use with RTS Intelligent Trunking.

RVON VOIP DEVICES & BREAKOUT PANELS

RVON VoIP Devices

The RTS Voice Over Network (RVON) series allows the full integration of our intercom system into your existing data network. It also allows you to create an independent network for your RVON equipment. Our devices are fully IP-compliant with current VoIP standards. All RVON series devices can be monitored via SNMP. The RVON product family supports ancillary data control for use with RTS intelligent trunking. These products enable trunking over IP for local to worldwide connectivity. The RVON codec is available as a free firmware update for the KP-Series keypanels, excluding the KP-3016A.

VoIP Interface	Device	Functionality
RVON-1	KP-32	Single Channel VoIP Interface
RVON-2	RP-1000 KP 12 CLD DKP 16 CLD	2-Channel VoIP Interface for CLD Keypanel Series
RVON-16	ADAM Series	16-Port VoIP Card Kit
RVON-C	Cronus	8-Port VoIP Card Kit
RVON-I/O	Analog Devices	8-Port VoIP Analog Interface
VKP	PC Client	Virtual Keypanel
RVON Codec	KP-Series keypanels excl. KP-3016A	2-Channel VoIP Interface for KP-Series

Breakout Panels

Breakout panels provide a convenient way of expanding the port capacity of ADAM intercom systems. There are eight breakout panels for use with the AIO cards: XCP-32-DB9, XCP-16-DB9-T, XCP-48-RJ45, XCP-48-TELCO, XCP-40-DB9, XCP-40-RJ11, XCP-955, XCP-954-48 and XCP-24-USOC .

Breakout Panel Comparison

Panel	Frame	Back Card	Connectors
XCP-955	ADAM/ADAM-M	Telco	(25x) RJ-12
XCP-954-48	ADAM/ADAM-M	Telco	(48x) DB-9
XCP-32-DB9	ADAM/ADAM-M & Cronus	MDR	(32x) DB-9
XCP-16-DB9-T	ADAM/ADAM-M & Cronus	MDR	(16x) DB-9
XCP-48-RJ45	ADAM/ADAM-M & Cronus	MDR	(48x) RJ-45
XCP-48-Telco	ADAM/ADAM-M & Cronus	MDR/Telco	(6x) Telco
XCP-40-DB9	ADAM/ADAM-M	SCSI	(40x) DB-9
XCP-40-RJ11	ADAM/ADAM-M	SCSI	(40x) RJ-12
XCP-24-USOC	ADAM/ADAM-M	SCSI	(3x) Telco
XCP-ADAM-MC	ADAM/ADAM-M	SCSI	(10x) DB-9, (1x DB25)

Card Comparison

	MCII-E	TBX-2	OMI	RVON-16	AIO-16A	MADI-2	CRONUS-AIO	RVON-C
Supporting Products	ADAM, ADAM-M						Cronus	
Function of card	Master Controller	Triple bus matrix expander	OMNEO Matrix Interface	VoIP interface	Analog Input/Output	MADI Input/Output	Analog Input/Output	VoIP interface
Features	Connects to AZedit matrix control software via Ethernet; Controls matrix	One card links up to four ADAM or ADAM-M frames together	Provides high-quality audio over IP	Connects matrix to panels and/or audio tielines over standard IP networks	Provides ports for audio in and out via MDR or SCSI, plus individual data drivers	Connects any AES-10 compliant devices over coaxial or fiber	Provides audio in and out via RJ12 or MDR	Connects matrix to panels and/or audio tielines over standard IP networks
Connections	(1) RJ45 Ethernet Connections (1) SCSI	(3) LC Type SFP Fiber Connectors	(2) RJ45 Ethernet Connections (1) LC Type SFP Fiber Connector (1) DB-9 Serial data port	(1) RJ45 Ethernet Connector (2) DB-9 RS232/485 Serial data	Choice of SCSI or MDR back cards (BC) BCs connect to breakout panels for (32) DB-9, (48) RJ45, or (6) 48-pin Telco-connectors	(1) RJ45 Serial data for RS232/485 (2) LC Type SFP Fiber Connectors (SM) (4) BNC connectors for MADI In/Out, Word Clock, and TV Sync	Choice of RJ12 or MDR back cards	(1) RJ45 (1) DB-9 RS232/485 Serial data
Ports per card	N/A	N/A	16-64, software license scalable	16	16	16-64, software license scalable	8	8
Frequency Response (Input)	N/A	N/A	± 1 dB from 20 Hz to 20 kHz	Typ. 300 Hz to 3100 Hz (G.711 codec)	± 1 dB from 20 Hz to 20 kHz	± 1 dB from 20 Hz to 20 kHz	± 1 dB from 50 Hz to 20 kHz	Typ. 300 Hz to 3100 Hz (G.711 codec)
THD+N at 1 kHz	N/A	N/A	< 0.01% @ 8 dBu	Codecs G.711, G.723, G.729 A	< 0.007% @ 21 dBu, 1 kHz, unweighted	< 0.4% @ 1 kHz	< 0.007% @ 1 kHz	Codecs G.711, G.723, G.729 A/B
Network Requirements	10 - 100 Mbit/s	N/A	≥ 100 Mbit/	≥ 10 Mbit/s	N/A	N/A	N/A	≥ 10 Mbit/s
Storage Temperature	-40°C to 70°C (-40°F to 158°F)						-20°C to 75°C (-4°F to 167°F)	-40°C to 70°C (-40°F to 158°F)
Operating Temperature	0°C to 50°C (32°F to 122°F)							
Power Consumption	7.5 W / 1.5 A @ 5 V FC and BC combined	13 W FC and BC combined	14.9 W @ 5 V FC and BC combined	10.2 W FC and BC combined	18.2 W FC only	18.7 W / 3.7 A @ 5V FC and BC combined	9 W approx.	5 W typical
Weight	FC: 0.33 kg (0.73 lb) BC: 0.12 kg (0.26 lb)	FC: 0.34 kg (0.75 lb) BC: 0.17 kg (0.37 lb)	FC: 0.29 kg (0.64 lb) BC: 0.14 kg (0.31 lb)	FC: 0.30 kg (0.66 lb) BC: 0.12 kg (0.26 lb)	FC: 0.33 kg (0.73 lb)	FC: 0.33 kg (0.73 lb) BC: 0.19 kg (0.42 lb)	FC: 0.16 kg (0.35 lb)	FC: 0.18 kg (0.40 lb) BC: 0.14 kg (0.31 lb)
Card Dimensions (W x D x H)	Front Card: 2.1 cm x 32.2 cm x 17.3 cm (0.8” x 12.7” x 6.8”) Back Card: 2.0 cm x 17.3 cm x 17.3 cm (0.8” x 6.8” x 6.8”)						Front Card: 21.0 cm x 16.5 cm x 1.0 cm (8.3” x 6.5” x 0.4”) Back Card: 21.0 cm x 13.7 cm x 2.0 cm (8.3” x 5.4” x 0.8”)	

KP-SERIES KEYPANELS

KP-Series keypanels deliver superior digital audio using the Bosch-developed OMNEO which includes Audinate's Dante audio over IP technology, via either copper or fiber. The KP-Series provides high-quality audio, free of noise, delay and other artifacts present in older technology. The family includes a rich set of connectors as standard, including GPIO and RC. As with other RTS products, emphasis has been placed on backward compatibility with previous generations of matrices including analog technology.

KP-Series keypanels utilize the latest generation of wide angle TFT displays, providing superior clarity, resolution and longer display life, along with high-quality readability under a variety of lighting conditions. The RTS OMNEO suit now fully supports Open Control Architecture (OCA) also known as AES70.

KP-SERIES FEATURES

- OMNEO Open Media Networking Standard – The new KP-Series is future-proof and so is your communication. The unparalleled flexibility features automatic hardware recognition plus the technology of OMNEO, so you get full backward compatibility and easy scalability.
- Full IP Connectivity and TCP-IP Layer 2 & 3 Compatibility
- Out with the old and in with the more intuitive. The new design and an enhanced user interface enable easier understanding and improved operation. The software provides simple and intuitive navigation of menus, with the most commonly used features easily accessible.
- Advanced Signal Processing and AD/DA – Get high-quality audio transmission every time. The new keypanel family features two echo cancellation modes, plus quick AD/ DA conversion – ensuring ultra-low latency and reducing noise, echo, delay and other artifacts present found in older technologies.
- User-Friendly, High-Res Color Display – Get high quality, inside and out. The new KP-Series keypanels feature a unified design, with better color, contrast, resolution and viewing angle for an improved visual experience. Plus, multiple controls through ergonomically-designed levers. Pushbutton versions are also available.
- Backward compatibility – All KP-Series keypanels are compatible with older technologies such as analog audio in USOC and 568-B connector formats.
- Standardized connectors – All previous hardware connector options (RC, GPI, and ancillary items) are now standard on the 4000 and 5000 series of KP-Series products.
- Enhanced navigation menus – Optimized for ease of use.
- High-performance Audio and Control Software Packages for KP-5032 and KP-4016 keypanel models including the DKP-4016 desktop keypanel. The software packages new features like keypanel mirroring, voicemail, customization, and more.
- RTS offers two firmware updates that allow your keypanels to speak either OMNEO or RVON, the tried-and-tested RTS Voice over Network codec for VoIP (Voice over IP).
- Reduced power consumption: The power utilization of the KP-Series keypanels is reduced to almost fifty percent compared to older keypanels and are the most environmentally friendly keypanels RTS has to offer.

KP-5032

32-Position HD Color Display Keypanel

Control Software Package*

Audio Software Package*

RVON

KP-4016

16-Position HD Color Display Keypanel

Control Software Package*

Audio Software Package*

RVON

EKP-4016

16-Position HD Color Display Expansion Panel

Connect up to 6 (KP-5032) or up to 7 (KP-4016) expansion panels for a maximum of 128 keys.

DKP-4016

16-Position HD Color Display Desktop/Wall-Mount Keypanel

Control Software Package*

Audio Software Package*

RVON

KP-SERIES PUSH-BUTTON KEYPANELS

KP-Series delivers superior digital audio using the Bosch-developed OMNEO IP-technology, which includes Audinate's Dante audio-over-IP streaming via copper or fiber. The KP-Series provides high-quality audio – free of delay and other audio artifacts present in older technology. The family includes a rich set of connectors as standard, including GPIO and RC. As with other RTS products, emphasis is on backward compatibility with previous generations of matrices. In response to growing customer demands, RTS now offers three models of the popular KP-Series as pushbutton versions featuring simple push-to-talk operation and easy switching between talk and listening mode. The keypanels KP-5032PB and KP-4016PB as well as the extension keypanel EKP-4016PB are available now. KP-Series keypanels utilize the latest generation of wide angle TFT displays, providing superior clarity and resolution. In addition, the RTS OMNEO suite supports Open Control Architecture (OCA) protocol and is compliant with the AES70 standard. RTS offers different firmware versions, making it possible to load either OMNEO or RVON (RTS Voice over Network) IP protocols.

KP-SERIES PUSH-BUTTON FEATURES

- OMNEO Open Media Networking Standard – The new KP-Series is future-proof and so is your communication. The unparalleled flexibility features automatic hardware recognition plus the open source technology of OMNEO, so you get full backward compatibility and easy scalability.
- Full IP Connectivity and TCP-IP Layer 2 & 3 Compatibility
- The enhanced user interface enable easier understanding and improved operation. The software provides simple and intuitive navigation of menus, with the most commonly used features easily accessible.
- Advanced Signal Processing and AD/ DA Conversion– Get high-quality audio transmission every time. The new keypanel family features two echo cancellation modes, plus quick AD/ DA conversion – ensuring ultra-low latency and reducing noise, echo, delay and other audio artifacts found in older technologies.
- User-Friendly, High-Res Color Display – Get high quality, inside and out.
- The new KP-Series keypanels feature a unified design with improved color, contrast, resolution and viewing angle.
- Lever key and pushbutton models. Ergonomics has been the guiding principle throughout our design, KP-Series offers lever keys and pushbutton models to suit your individual needs.
- Backward compatibility – All KP-Series keypanels are compatible with older technologies such as analog audio in USOC and 568-B connector formats.
- Standardized connectors – All previous hardware connector options (RC, GPI, and ancillary items) are now standard.
- High-performance Audio and Control Software Packages also work on the new pushbutton panels. The software packages new features like keypanel mirroring, voicemail, customization, and more.
- RTS offers two firmware versions that allow your keypanels to speak either OMNEO or RVON, the tried-and-tested RTS Voice over Network codec for VoIP (Voice over IP).
- Reduced power consumption: The power utilization of the KP-Series keypanels is reduced to almost fifty percent compared to older keypanels, they are the most environmentally friendly keypanels RTS has to offer.

KP-5032PB

32-Position HD Color Display
Keypanel with pushbutton

Control Software Package*

Audio Software Package*

RVON

KP-4016PB

16-Position HD Color Display
Keypanel with pushbutton

Control Software Package*

Audio Software Package*

RVON

EKP-4016PB

16-Position HD Color Display
Expansion Panel with pushbutton

Connect up to 6 (KP-5032 & KP-5032PB) or up to 7 (KP-4016 & KP-4016 PB) expansion panels for a maximum of 128 keys. Pushbutton expansion panels can be connected to lever-key panels, and vice versa.

BEST-IN-CLASS SOLUTIONS

Four new KP-Series keypanel models complement the KP-Series keypanels family in the entry level segment. Depending on the intercom environment, these products can be connected to both digital (KP-3016 and DKP-3016 only) and analog RTS matrices and utilized as entry-level keypanels while still offering the same intuitive, easy handling features. They can also be quickly installed in applications with predefined requirements where the comprehensive connectivity options of the existing KP-series models are not needed, but with the same consistent industrial design, hardware and software platform and high-quality audio performance.

KP-3016

one rack unit keypanel, 16 operation keys with analog and IP (OMNEO/ DANTE or RVON) matrix interface

RVON OMNEO

KP-3016A

one rack unit keypanel, 16 operation keys with analog matrix interface only. Does not support RVON or OMNEO.

EKP-3016

one rack unit expansion keypanel, 16 operation keys for KP-3016 and KP-3016A

DKP-3016

Also available as a wall mount version, the DKP-3016W.

16-Position HD Color Display
Desktop/Wall-Mount Keypanel

RVON OMNEO

KEY FEATURES

- Each keypanel features full-color HD displays offering well-balanced color, contrast and resolution. The keypanels are capable of displaying English, Kanji, Cyrillic, and simplified Chinese characters.
- Intuitive, easy to learn operation with ergonomically designed listen/talk levers.

All RTS keypanels have a consistent user interface and operation, which is intuitive and easy to learn.

- Superior sound quality with design assistance provided by the EV speaker engineering R&D group.

- Backward compatible with existing RTS analog matrices and forward compatible with future-proof OMNEO IP architecture.
- OMNEO technology onboard. The KP-3016 and DKP-3016 incorporate OMNEO media networking without the need for additional cards or add-ons.

FEATURE COMPARISON – KP-SERIES

All keypanels have a large high-resolution TFT1 wide view angle display with 65536 colors and approximately 80° view angle; AEC2, full backward compatibility, self-sensing headset input, and roughly half the power consumption of older panels.

Family	KP-3016A	KP-3016	DKP-3016	DKP-4016	KP-4016	KP-5032	KP-4016 PB	KP-5032 PB
Form factor	1RU		DKP/WM[3]		1RU	2RU	1RU	2RU
Input device	Lever key (LVR)						Push button (PB)	
Talk	LVR ▼	LVR ▼	LVR ▼	LVR ▼	LVR ▼	LVR ▼	Push PB	
Listen	LVR ▲	LVR ▲	LVR ▲	LVR ▲	LVR ▲	LVR ▲	LSTN + PB	
Keys (KP / DP)	14		16		14	32	14	32
Keys (Exp)	16		Not applicable		16			
Cross Point Vol.	Knob			LVR ◆	LVR ◆	LVR ◆	PB + Aux knob	
Anti-glare lens	No		Yes	Yes				
Dialing pad	No			Yes				
TCP/IP Layer 3 Dante compatible	No[4]	Yes, OMNEO						
Redundant IP conn.	No			Yes, RSTP[5]				
Front self-sensing hdst inp.	Yes							
Power (W), nominal[6]	8	11	25		12	13	12	13
Aux inputs[7]	No			1	2			
Ext mic input[7]	No			Yes				
Hdst connector	1		2[8]		2[9]			
Line out / mic out[10] GPIO-connector[11]	No		Yes					
Power supply	External[12]		Internal[13]		External[12]			
Output for ext. speaker	No			Yes				
OMNEO (RJ-45)	No	1		2				
OMNEO (for SFP)	No			1				
Backward compatible	Yes							
Firmware can be upgraded	Yes							
Accepts RVON codec firmware	No	Yes						
Enhanced feature licensing	No			Yes[14]				

[1] TFT = Thin Film Transistor
[2] AEC = Acoustic Echo Cancellation; older panels have feedback suppression only
[3] DKP = Desktop; WM = Wall-mount
[4] Analog only
[5] RSTP = Rapid Spanning Tree Protocol
[6] Measured from mains outlet
[7] XLR-3F
[8] One XLR-4F and one XLR-5F, both located on the side of the unit
[9] Rear XLR-5F, front XLR-4F or -5F
[10] XLR-3M, located on the rear of the unit
[11] Two relays and two opto-inputs
[12] On units with external power supply, the same type is used
[13] Uses locking AC-connector
[14] KP-Series software packages, Audio and Control

KP-Series Accessories

Accessory	Panel	Functionality	Features
PSU MK	KP-5032 OEI-2/KP-4016	Mounting bracket	Mounting bracket for secure mounting of the external OEI-2/KP-4016, KP-5032 power supply.
PSU KP	KP-5032 KP-4016 EKP-4016 KP-3016 EKP-3016	Power supply	spare power supply for KP-5032, KP-4016 and EKP-4016
Hdst Conn 4F	KP-5032 KP-4016	Headset connector	XLR A4F headset connector inlay for KP-5032 and KP-4016 keypanel.
Hdst Conn 5F	KP-5032 KP-4016	Headset connector	XLR A5F headset connector inlay for KP-5032 and KP-4016 keypanel.
Hdst Conn 4M	KP-5032 KP-4016	Headset connector	XLR A4M headset connector inlay for KP-5032 and KP-4016 keypanel.
Hdst Conn 5M	KP-5032 KP-4016	Headset connector	XLR A5M headset connector inlay for KP-5032 and KP-4016 keypanel.
MCP-90-x	All RTS keypanels	Electret Gooseneck Microphone	Available in various length from 0" till 18". All versions use a electret microphone element.

KP-SERIES SOFTWARE PACKAGES

RTS offers two software packages for its KP-Series keypanels, designed for high-tech users including large broadcasters and organizations with more demanding requirements for audio-visual performance and remote control. The audio and control software packages represent a completely new way to enhance the functionality and investment value of existing RTS hardware. Each software package can be installed on the KP-5032 and KP-4016 keypanel models, including the DKP-4016 desktop keypanel. A one-time-only fee means there are no recurring payments. Once installed, the two packages create customized audio/control functionality that meets the most challenging requirements.

HIGHLIGHTS

- The KP-Series Control package includes two supervisor features to make it easy to change the settings on any keypanel, either from a central location using AZ-Edit, or from any panel with Keypanel Mirroring installed.
- The KP-Series Audio package offers the best audio performance of any keypanel on the market. Users can fine-tune the audio to their personal preferences. Multiple audio parameters are available to users.
- The Audio package also has voice mail, to make sure your message reaches its intended recipient. The voice message system will alert users to the presence of messages, as soon as they return to their keypanel.

Control Software Package*

Configuration upload/download:
remotely configure any keypanel and edit/save keypanel configurations in AZ-Edit software

Supervisor mode (keypanel mirroring):
remotely configure any keypanel, adjust volumes and other parameters in real-time on target panel from a supervisor panel

Real-time volume control via AZ-Edit software:
ensures that users can always hear verbal instructions, even if their volume is turned to zero

Downloadable screensaver:
download a screen saver that is specific to you or your organization

Downloadable chimes:
download a set of chimes that is specific to you or your organization

Audio Software Package*

Five-band equalizer:
adjust volume level within five pre-defined frequency bands; users can fine-tune audio to their individual preferences

Noise gate:
adjust as required to reduce fatigue-causing line noise

OMNEO AUX Input:
The Audio Software Package also provides six OMNEO AUX inputs in addition to the two standard inputs, giving you more configuration options for your matrix environment.

Voice mail:
leave messages for other users

Additional compression ratios:
offer more flexibility. In noisy environments, audio quality can be improved by the amount of compression. This option adds additional compression ratios of 4, 5, and 6 to the standard 1:1, 2:1, and 3:1.

RVON Codec

RVON Codec:
The field-proven RVON (RTS Voice over Network) codec for VoIP (Voice over Internet Protocol) enables communication between users across long distances, with superior sound quality compared to competitor software solutions.

KP-Series users may now connect to matrices equipped with a suitable RVON interface, such as the RVON-16 for ADAM/ADAM-M or RVON-C for Cronus matrices. RVON uses the G.711 narrowband audio protocol, providing toll-quality audio at 64 kbit/s.

*The Audio and Control Software Packages are optional and can be installed on all KP-5032, KP-4016 and DKP-4016 keypanel models.

COLOR SERIES KEYPANELS

RP-1000 Series

32-Position Color Display Keypanel

The Color Series keypanels sport advanced features that take flexibility and ease-of-use to the next level. The Color Series feature a revolutionary customizable GUI in integrated full-color TFT displays. The Color Series advanced functionality is wrapped in a sleek, ergonomic design with a contoured bezel that fits flush within a rackmount configuration and looks great on the desktop.

The new RP-1000 features a stunning high-contrast HD TFT display with high-efficency LED backlighting and enhanced language support for system alphas.

COLOR SERIES FEATURES

- Full-Color TFT Display – The TFT color display hosts a rich and intuitive GUI that allows each type of function to be assigned a unique color.
- Modern, Modular Design – The rackmount Color Series keypanel's flush front panel is ergonomically designed to fit easily into any control room or truck application. The back panels are optimized for future expansion.
- Multi-Directional Keys – Multi-directional keys are used for talk, listen and emulation of traditional level control function.
- Enhanced Features – The Color Series keypanels support industry leading features, such as up to six auxiliary inputs, three relays, independent digital gain control for microphone sources and configurable audio routing.
- DSP – Acoustic Echo Cancellation, Equalization, Mixing, Filtering and Metering.
- User-Programmable Buttons – User-programmable buttons provide custom shortcuts to menu functions.
- Key Sequence Options – Color Series keypanel can be ordered with the new Color key sequences and button screening, or the classic key sequences and button screening configured for the backlit numeric keypad.
- Future Expansion – Designed to allow for an expansion panel and optional connections to the matrix through current and future standard transmission formats.

RP-1932

Color Display Expansion Panel

KP 12 CLD

12-Position Color Display Keypanel

DKP 16 CLD

Color Display Desktop Keypanel

Color Series Accessories

Accessory	Panel	Functionality	Features
DKP 16 CLD RC	DKP 16 CLD	Rear Connector Kit	5 AUXs, 3 relays, 4 opto Inputs, headset, 2 OC outputs, foot SW, mic in/out, speaker
KP 12 CLD RC	KP 12 CLD	Rear Connector Panel	3 AUXs, 3 relays, 4 opto inputs, headset, 2 OC outputs, foot SW, mic in/out, LCP, EXP, frame, VoIP
RP-1000 RC	RP-1000	Rear Connector Kit	6 AUXs, 3 relays, 4 opto inputs, headset, foot SW, speaker, 2 OC outputs, mic in/out
LCP 16 CLD	RP-1000	Level Control Panel	Provides direct knob access to the volume levels of AUX, sidetone, speaker, headset and other functions of the RP-1000/KP 32 CLD
OKI	RP-1000 KP 12 CLD KP-32	OMNEO Interface	Two channels of audio in and out, Ethernet and fiber compatible
RVON-2	RP-1000 DKP 16 CLD KP 12 CLD	VoIP Interface	Two channels of audio in and out, Ethernet compatible
MCP-90-x	All RTS keypanels	Electret Gooseneck Microphone	Available in various length from 0" till 18". All versions use a electret microphone element.

OKI

Keypanel Interface Card

This card fits into select RTS user stations and provides native OMNEO IP connectivity for RJ45 Ethernet connections into the OMNEO network with optional single or multimode fiber modules. The card provides a two-port switch onboard as a pass-thru connection to allow daisy chaining of keypanels if required. It plugs into the existing header in the keypanel and comes with all parts needed to complete the upgrade. The OKI card is available for the RTS KP-32, RP-1000 or KP 12 CLD keypanels.

WKP-1

1-Position Wall Keypanel

WKP-1 is an analog-only industrial intercom keypanel in a rugged and weather-resistant design. Microphone and speaker are built into the unit. The unit is intended for wall mount applications, and fits into a standard 2-gang 3” deep electrical box (approximately 8 cm). The built-in relay switch allows the user to set up door latching, unlatching, and other actions by pressing a single button from any panel in the system. The keypanel can be powered in two ways: locally through a 3-pin terminal or remotely via an RJ-45 connection from the breakout panel or remote power supply. The WKP-1 has been updated with new circuitry to use less power, as well as reverse polarity protection on the DC input.

Specification Table

	OKI OMNEO Keypanel Interface Card
Supporting Products	KP-32, KP 32 CLD, RP-1000, KP 12 CLD
Connections	(2) RJ45 Ethernet Connections (1) LC Type SFP Fiber Connector
Audio I/O Levels	Input/Output (maximum level): +20 dBu Input/Output (nominal level): +8 dBu
Frequency Response (Input)	Within ±1 dB from 20 Hz – 20 kHz
Network Requirements	< 2 ms typical
Storage Temperature	KP 12 CLD/KP 32 CLD/RP-1000: -40°F to 158°F (-40°C to 70°C) KP-32: -40°F to 140°F (-40°C to 60°C)
Operating Temperature	KP 12 CLD/KP 32 CLD/RP-1000: 5°F to 122°F (-15°C to 50°C) KP-32: 14°F to 105.8°F (-10°C to 41°C)
Power Consumption	KP 12 CLD/KP 32 CLD/RP-1000 without Fiber: 5 watts KP 12 CLD/KP 32 CLD/RP-1000 with Fiber: 5.75 watts KP-32 without Fiber: 5.5 watts KP-32 with Fiber: 6.25 watts
Weight	4.15 oz (card only)
Card Dimensions (W x D x H)	4.5" x 3.0" x 1.1" (29.03 cm x 19.35 cm x 7.10 cm)

*OMI card is a digital board with build-in audio mixer for 64 inputs. The audio I/O levels are specific to analog sources such as AIO-16A or keypanel.

PREMIERE CONTROL AND MONITORING PARTNERS

These software tools help automate production workflows for multiple vendors products, including RTS Intercom systems. Capabilities include monitoring, operation and configuration.

LAWO

VSM

VSM (Virtual Studio Manager) is Lawo’s sophisticated and flexible, IP-based broadcast control and monitoring system that integrates the control of all equipment in the field of TV and radio production in one system. For people involved in production and technical planning this provides incomparable benefits in terms of an advanced workflow and simplifies operation during productions.

The VSM system works on a TCP/IP backbone and offers maximum interoperability through the implementation of a large number of manufacturer independent protocols VSM is focused 100% on ensuring optimum integration in existing, new and future systems through interoperability with all conceivable broadcast equipment and wherever possible communication by means of native protocols. The VSM controls all major brands and models of video and audio routers, video and audio mixers, intercom, under monitor display (UMD) and multi-viewers, glue equipment and other third party devices.

In particular VSM is able to control the complete Tally and Labelling requirements of a system without any additional equipment. Thanks to its ability to control all these components customers are free to decide on the best and most up-to-date hardware technology and at the same time to use the VSM system as the single control system for all the hardware – in one single user interface with the possibility of managing an unlimited number of users. Each user is able to adapt his own graphical interface individually so that it meets his own technical operational requirements.

AXON
THE HEART OF BROADCAST

Take control at the heart of the action

With Axon's Cerebrum control & monitoring at the nerve-centre of broadcast operations, complex workflows are simplified, multiple video & audio signal paths are mastered & production tasks that could take hours to do can be accomplished in just minutes.

An open platform offering extensive third-party integration & multi-device control via a fully customizable interface, Cerebrum tackles complex & live production with ease – giving ultimate control at the heart of the action.

Cerebrum is fast becoming the control solution of choice for mobile production, news and studio live production, master control and remote production. With a broad range of features and offering support for a wide range of third party devices – including routers, production switchers, servers, receiver decoders, multi-viewers and waveform monitors – Cerebrum is perfectly suited to complex production environments, simplifying multi device monitoring and control onto one easy-to-use interface.

RTS Admin keypanel

RTS keypanel pair

SOFTWARE

RTS software provides complete control over your intercom system from any standard Windows computer. Configure keypanel settings, assign user rights and even link matrices together that are thousands of miles away.

The RTS VoIP Virtual Keypanel (VKP) is a Windows-based application that allows any user to have a fully functioning RTS digital matrix intercom user station on their PC.

AZedit

RTS Matrix Control Software

Intercom system configuration has never been easier with the advent of AZedit matrix control software. AZedit is a Windows-based, full-featured configuration software, providing online and offline configuration capabilities. It gives you the ability to manage multiple intercom systems, assign and reassign users to different ports, as well as dynamically add intercom hardware to your system setup without jumper changes, rewiring or taking the system offline. AZedit has the capability to load pre-set configuration files, which means saved configurations can be uploaded to the live application at anytime without interruption. AZedit can be used as a monitor tool to observe the status of features, such as gain and crosspoint settings, keypanel keys activated and other aspects of the system. AZedit can run in multiple sessions using the MCII-E ADAM master controller to allow for remote system configuration. AZedit is updated regularly to provide users with the latest features and innovations available.

IPedit

Configuration Software for RVON & OMNEO Devices

IPedit is a Windows-based GUI application for configuring and displaying RVON and OMNEO devices connected to your matrix system. IPedit is to IP products as AZedit is to ADAM, Cronus and Zeus. An enhanced version of IPedit is available, which can configure multiple network devices simultaneously.

RestrictEdit

Access Management Software

RestrictEdit is a tool to create restriction files for use with AZedit software. Restriction files allow administrators to manage user access to resources and features. AZedit includes support for user restrictions by reading a text file (the restrictions file) and parsing out the set of resources and features available to each user.

Trunk Edit Software

Trunk Edit Software is a GUI for programming TM-10K trunking devices. Trunk Edit Software allows the user to set up all necessary parameters required for trunking multiple intercom systems. Each intercom system can be configured to work together as a virtual-integrated, single intercom system while still maintaining each individual system's autonomy.

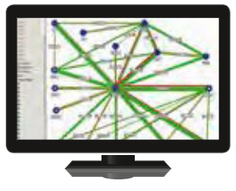

Trunk Supervisor Software

TSS is a trunking system management application. The program allows for real-time monitoring of trunk line status information. When used in combination with the RT-2M test set, it allows for fully automated testing of a trunked system. If a trunk line is found to be out of specification, the trunk line can be pulled out of service until the issue is resolved. The program also has the capability of remote notification of user defined alarm events.

SYSTEM PERIPHERALS

GPIO-16

General Purpose Interface

The GPIO-16 interface provides 16 opto-isolated inputs and 16 relay outputs. It connects to the matrix via serial or Ethernet for remote operations.

MDA-100

Mixing & Distribution Amplifier

The MDA-100 contains an 8 x 1 summing amplifier (mixer) and a 1 x 8 distribution amplifier.

LCP 16 CLD

Level Control Panel

Provides direct knob access to the volume levels of AUX, sidetone, speaker, headset and other functions of the RP-1000/KP 32 CLD

LCP-102

Level Control Panel

The LCP-102 functions as an analog trim panel, used to either adjust input/output gains, party-line assignments or program assignments for IFBs.

PAP-32

Program Assignment Panel

The PAP-32 enables routing of program sources to IFB destinations.

DSI-2008*

Digital System Interface

The DSI-2008 interfaces two 2-wire intercom lines to two 4-wire lines, and also interfaces balanced and unbalanced 2-wire lines. Digital hybrids eliminate all nulling and ducking adjustments. It puts an end to concerns about echo and feedback when interfacing 2-wire lines.

SSA-324*

System-to-System Adapter

The SSA-324 interfaces two 2-wire intercom lines to two 4-wire lines, and also interfaces balanced and unbalanced 2-wire lines. The SSA-324 is ideal for steady load applications. It is only available in the 110V version.

TIF-2000A*

Single-Line Telephone Interface

The TIF-2000A provides bidirectional communication between the intercom matrix and a standard analog telephone line.

TIF-4000

12 Line Telephone Interface

The TIF-4000 provides bidirectional communication between the intercom matrix and up to 12 standard analog telephone lines. The unit operates with 2 redundant power supplies.

MCP-90-x

MCP-90-x	Electret Gooseneck Microphone
MCP-90-0	0" Gooseneck Microphone
MCP-90-8	8" Gooseneck Microphone
MCP-90-12	12" Gooseneck Microphone
MCP-90-18	18" Gooseneck Microphone

The MCP-90-x gooseneck microphones is the standard gooseneck Intercom microphone for all RTS keypanels. Available in various length from 0" till 18". All versions use a electret microphone element.

SIP-ISDN

SIP Telephone Interface

The SIP-ISDN has support for the SIP protocol and incorporates an ISDN basic rate interface (1x S0/2 Lines) and a LAN interface. To connect the SIP-ISDN unit directly to a matrix port, a RS-232 to RS-485 data converter is required.

*1/2 of 1 RU device, Rackmount kits see page 74.

FMI-4 & FMI-8 MULTIPLEXERS

With its two new multiplexer models, RTS now offers these users a powerful solution to integrate their analog keypanels into high-performance optical fiber networks. The FMI-4 and FMI-8 are fully compatible with intercom matrices. User keypanels and interfaces from RTS can connect up to four or up to eight analog devices to an RTS matrix over fiber network.

Multiplexing several analog cables into one single optical fiber (SM or MM) not only reduces the amount of cabling, it also means less maintenance, allows for easy network configuration and monitoring via software, adds additional routing capabilities and provides full redundancy in a double fiber ring configuration. In addition, existing infrastructures can be leveraged by companies already using optical fiber networks, allowing easy integration of network audio and data.

The new multiplexers come with a built-in, highly stable word clock generator. In case of a failure of the word clock master, the FMI-4 and FMI-8 multiplexers employ an automatic switching algorithm allowing every device to function as word clock master in a system.

The RTS multiplexer models feature low power consumption and silent operation. They can even be used in recording studios, OB vans or theater productions with very high requirements for room acoustics.

FMI-4

Multiplexer featuring four RTS compatible four-wire intercom ports

Multiplexer featuring four RTS compatible four-wire intercom ports with serial control, line level audio inputs and outputs, along with serial data links on RJ45 connectors for communication between intercom matrices and auxiliary devices. To download the control software visit www.optocore.com

FMI-8

Multiplexer featuring eight RTS compatible four-wire intercom ports

Multiplexer featuring eight RTS-compatible four-wire intercom ports with serial control, line level audio inputs and outputs along with serial data links on RJ45 connectors for communication between intercom matrices and auxiliary devices. To download the control software visit www.optocore.com

Mixing analog and digital keypanels

An Ethernet signal can also be carried across the optical network.
In this example, a KP-4016 with EKP-4016 expansion panel are also connected.

Both FMI-4 and FMI-8 have two LAN-ports, internally connected by a fast Ethernet switch.
This is shown in the illustration below.

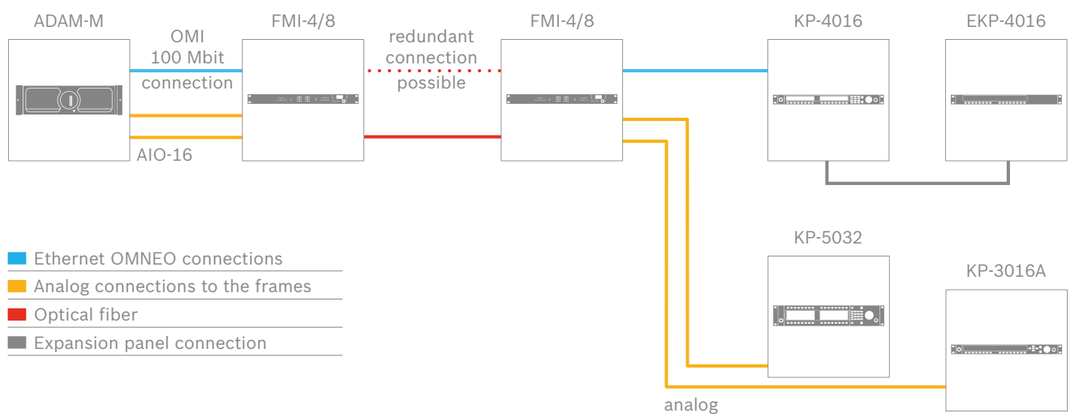

RTS VLINK

ACCESS YOUR RTS INTERCOM MATRIX ANYWHERE, ANYTIME

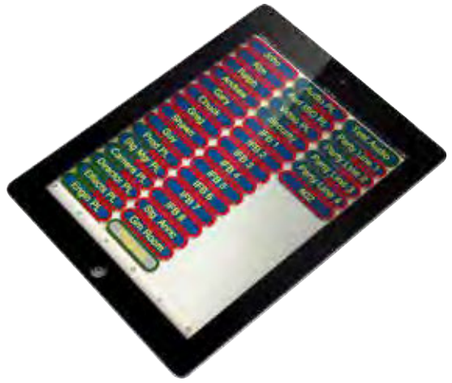

RTS VLink is a fully interconnected software application that enables remote users to interface with RTS matrix intercoms, allowing control and flexibility from anywhere in the world. RTS VLink extends your RTS intercom to any location with internet access, turning a standard conference room or hotel suite into an executive monitoring lounge offering full two-way communication with production facilities such as control rooms and video trucks. Whether the people you need to talk to are in the same facility, across town, or thousands of miles away, RTS VLink securely ties them into your main intercom over a dedicated network, or via standard Internet connections using a VPN – all without any running of cable or leasing of lines. The basic system can be operated in stand alone mode, the advanced version can integrate to your existing RTS intercom system.

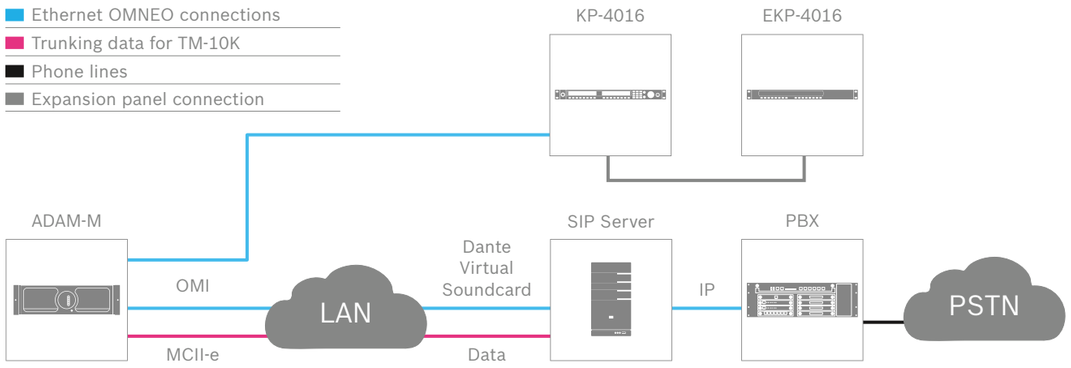

VLINK for SIP-Connectivity

With the new SIP server functionality, RTS provides a cost-effective way for digital matrices to make phone calls via IP telephony. Interfacing with SIP, this allows users to feed into a PBX and ultimately into the public switched telephone network. SIP server can provide an unlimited number of digital telephone lines. For flawless operation, a complete system requires an RTS matrix with OMNEO IP technology on board, a PC with the RTS VLink server, SIP-lines, an IP network and the respective software components and licenses. Wherever VLink software uses the SIP server functionality, a TrunkMaster system is no longer required. For broadcasters already using TrunkMaster, the SIP server can be utilized as a professional backup communication system, adding more resilience and redundancy to the existing intercom system.

RTS VLINK FEATURES

- Anywhere, Anytime Access – The perfect solution for users that need secure, intelligent access to their RTS matrix from any location.
- Flexible configuration – scale the system to any number of ports (initial system of eight ports with two-port expansions available). Purchase only the capacity you need.
- Full integration into RTS Matrix Intercom Systems – Allows full mapping of all intercom alphas.
- Fully DHCP compliant – Operates over open internet connections. Secure access can be employed with a standard VPN connection.
- SIP telephony support – Full IP telephony for digital matrices to make phone calls via SIP server functionality
- Flexible connectivity – Provides a variety of connections including MADI, analog or Firewire.
- True mobility – Access an RTS matrix via smart phone or ipad etc. using a WiFi/3G/4G internet connection.

TRUNKING

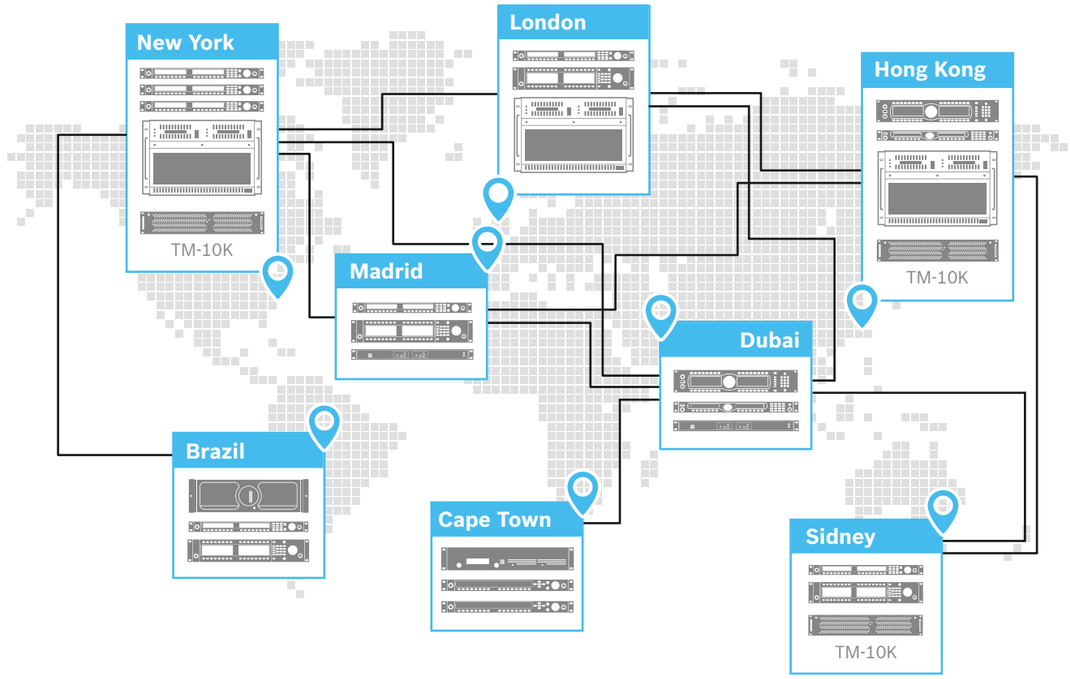

INDIVIDUALLY CONFIGURED MATRICES ALLOW FOR EASIER ADMINISTRATION OF THE OVERALL INTERCOM SYSTEM

Trunking allows global users to intelligently interconnect their intercom systems worldwide to provide a global communication solution. A seamless communication between the various systems is giving the impresson of one complete system. Each RTS matrix (or bus expanded system) is treated individually and is configured/managed by their own AZedit session, allowing for the administration of the systems to be carried out locally and more manageably rather than having to control one huge system. The matrices are connected together via a network of audio tielines. The RTS TrunkMaster dynamically controls and allocates the audio tieline as a pool of resources making the necessary audio routes. It optimizes the audio tielines by making multiple crosspoints or forks in the matrices to eliminate using tielines for the same function. For control, the TM10K TrunkMaster only requires an Ethernet Network connection to the RTS Matrix or alternatively a serial (RS-485) connection to each of the matrices or systems. The audio tielines can be via analog or digital audio protocols and codecs such as POTS, ISDN, MADI, RVON, AES, OMNEO or even analogue Four-wires.

TRUNKMASTER & TRI-BUS MULTI-FRAME TOPOLOGY

TM-10K

High Capacity Trunkmaster

The RTS TM-10K trunkmaster is a super high capacity intelligent linking system to provide virtually limitless expansion to any RTS intercom network. The TM-10K seamlessly links up to 255 RTS intercom systems, allowing users to communicate with one another instantaneously with all the same presets, scroll lists and tallies available on local matrices. 10,000 trunk lines can be interconnected into one network. Whether the systems are located in adjacent studios or on different continents, intelligent trunking unifies your unique communication needs.

The TM-10K can be linked using OMNEO, RVON or analog audio connections providing the ultimate in flexibility and reliability. Using multiple TM-10K units, the system is fail safe, providing redundant linking connections and control of which can be separated over long distances for superior reliability and flexibility.

- Dual redundant power supplies provide fail safe operation.
- Support for dual network interface connections for enhanced reliability.
- Solid-state hard drive for superior operational speed and reliability.
- Capacity to link up to 255 RTS intercom systems and 10,000 trunk lines.
- Full support for all RTS digital matrix frames.
- Fail safe operation when using multiple trunkmasters.
- Redundant trunkmasters can be geographically separated.

Tri-Bus Multi-Frame Topology

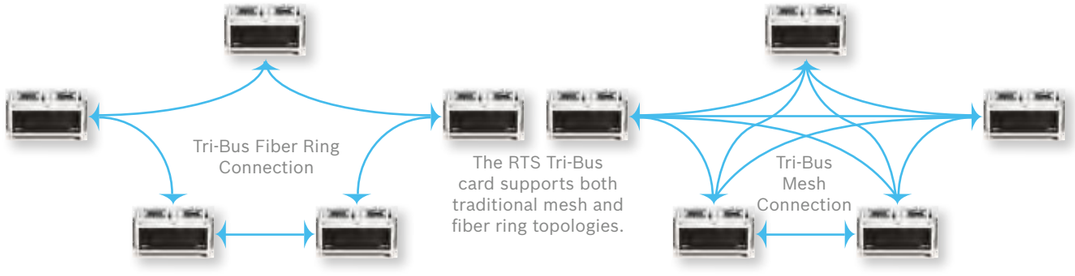

The RTS systems Tri-Bus technology provides the end user with a wide variety of system expansion options. The Tri-Bus expander supports both a dual fiber ring or a robust mesh architecture for added redundancy. Whether your communication needs call for a distributed topology or centralized design, the Tri-Bus expansion card can meet the challenge.

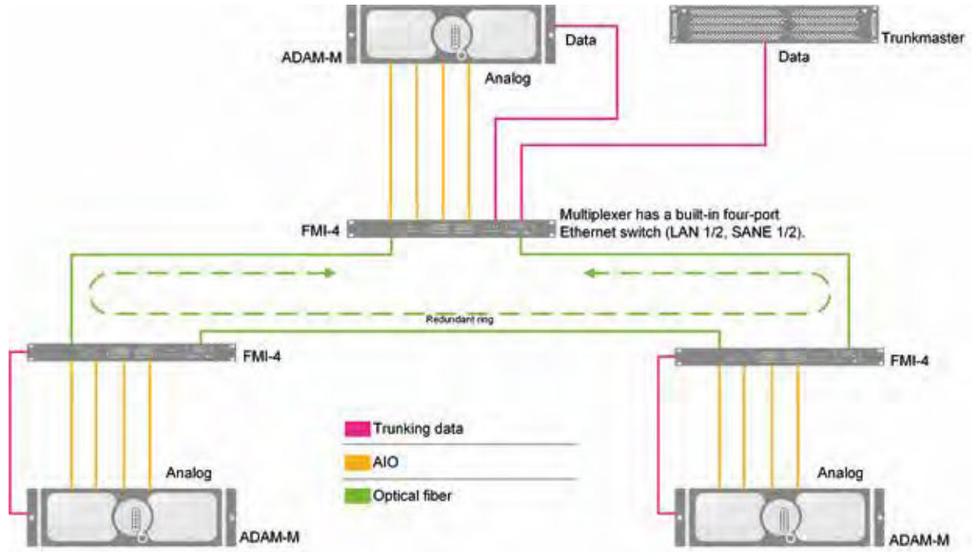

Figure 1. Non-redundant trunking application using analog connections (AIO). FMI-4 multiplexers are used to create a redundant transmission backbone.

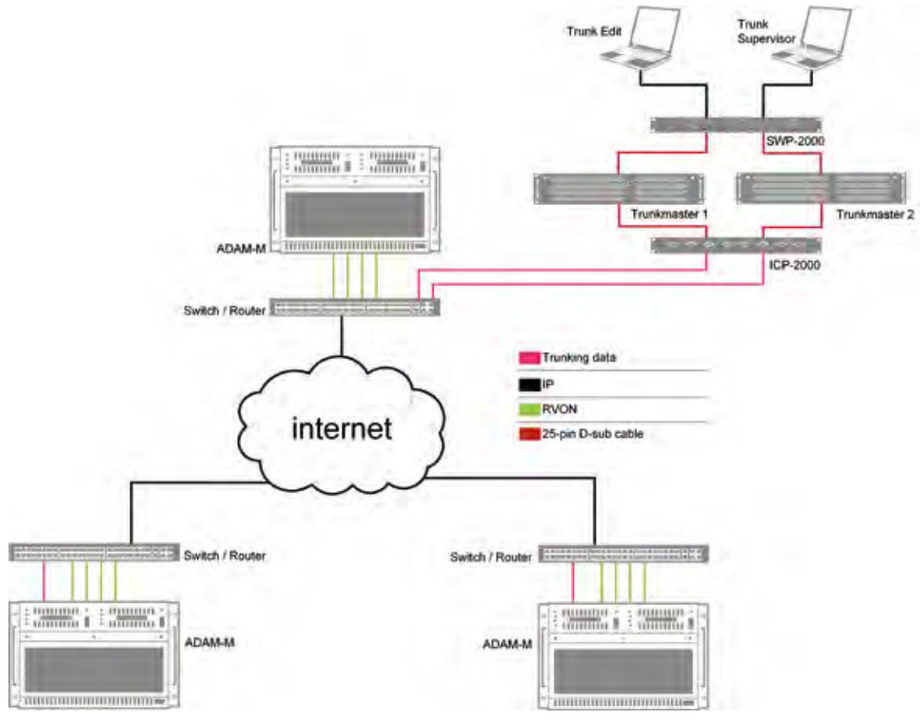

Figure 2. Redundant trunking application using audio over IP (RTS Voice Over Network, RVON). One of the Trunkmasters is a backup to the other.

WIRELESS INTERCOM

USER-FRIENDLY, SEAMLESS COMMUNICATION

WIRELESS INTERCOM

ROAMEO CELLULAR DECT-BASED WIRELESS INTERCOM SYSTEM

USER-FRIENDLY, SEAMLESS COMMUNICATION IN LARGE AREAS

The new ROAMEO wireless intercom system from RTS is a professional, easy-to-use and future-proof solution based on the license-free DECT (Digital Enhanced Cordless Telecommunications) standard. ROAMEO provides high-quality audio and a large number of simultaneous users across wide areas over a seamlessly integrated digital wireless beltpack and associated access points. ROAMEO can solve a series of communication challenges by operating like a wireless keypanel in the field which is easy to use and easy to expand. Additionally, wireless beltpacks can be directly addressed as part of a wired RTS matrix intercom system.

TR-1800

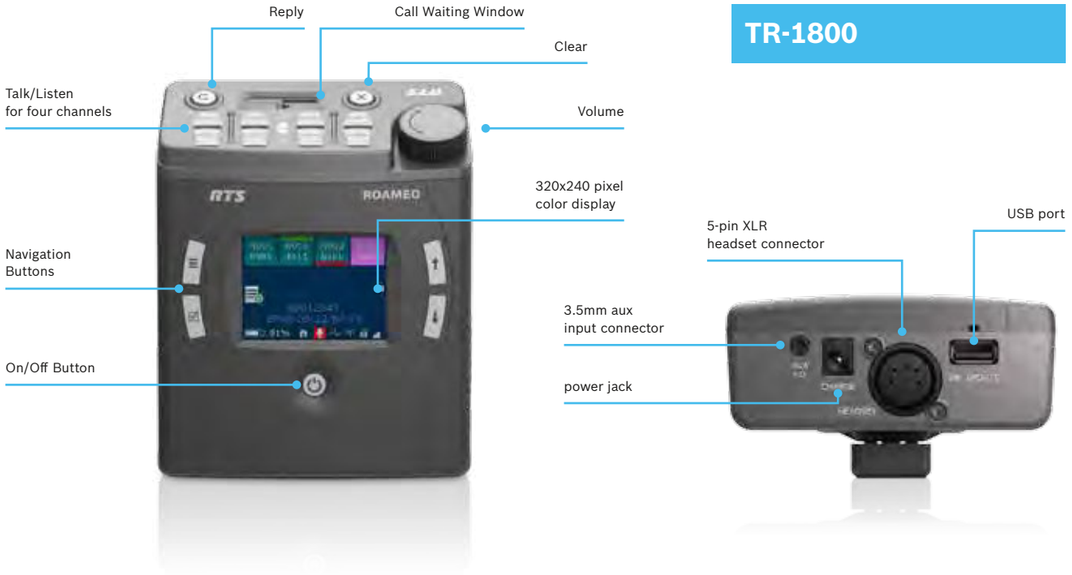

ROAMEO provides a superior user experience – the system can be easily configured in a multi-language set-up via scroll lists on the TR-1800 beltpacks or using the control software AZedit, which allows users to configure the complete intercom system on one screen. Thanks to its large color LED-display and intuitive icon-based menu structure, the TR-1800 beltpack is very easy to set up and operate. With its lightweight, durable housing, the beltpack features the smallest enclosure in its class and is protected against dust and light rain.

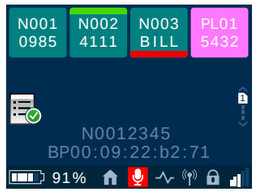

Home

Settings

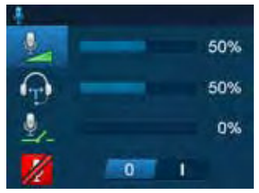

Level Adjust

Alerts

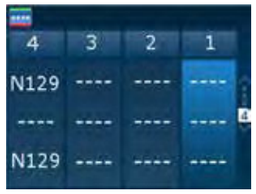

Assignments

Advanced Settings

Languages

DECT

AP-1800

THE AP-1800 ACCESS POINT – COMPATIBLE AND RELIABLE

Connection to a digital matrix is easily established via a single Ethernet cable; the access points can be daisy-chained. The AP-1800 access point is protected by a durable aluminum enclosure and designed for a minimum of spatial requirements on vertical or horizontal wall surfaces. The AP-1800 access points convert the DECT signals into Dante-compatible OMNEO IP-technology, thereby providing the highest interoperability, flexibility, reliability and resilience.

EXPANDING THE SYSTEM

ROAMEO's cellular structure can cover a wide area with superior audio and seamless roaming between the individual cells. Each cell requires an AP-1800 access point and covers a specified area and number of beltpacks, depending on the audio codec used. Each AP-1800 has a built-in IP switch that adds multiple streams together in the same cable and will configure itself automatically. Users can easily expand the coverage area by adding additional access points, while additional wireless beltpacks can be directly addressed as part of a wired RTS matrix intercom system.

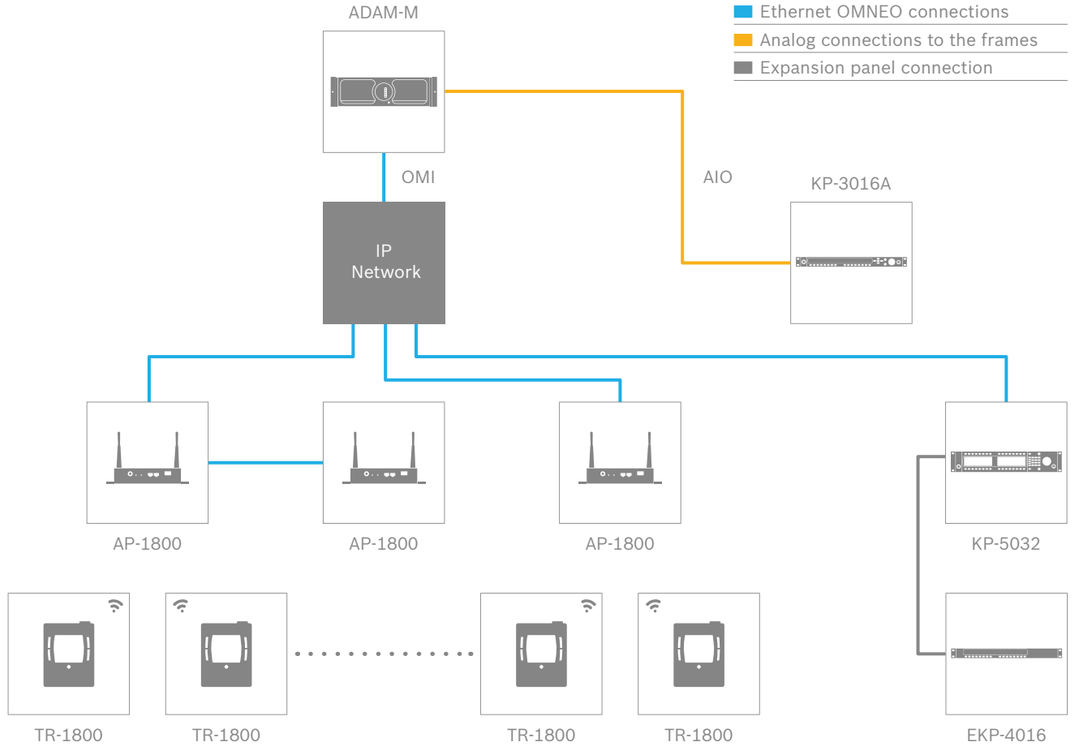

AP-1800 HOLSTER

Holster with shoulder strap for TR-1800

The TR-1800 holster is an accessory intended for users who do not use a belt, or prefer a shoulder-strap instead of the clip. The holster provides additional protection against dust (no rain protection). TR-1800 holster may be purchased as accessory separately.

24-PSE Spare Power Supply

Spare power supply for TR-1800

The TR-1800 beltpack comes with a power supply included, but for users who want an extra power supply, the PSE-24 may be ordered separately. It provides the correct voltage for charging the Lithium-Ion battery in the unit. The TR-1800 beltpack cannot be operated while the battery is charging. A full charge takes approximately eight hours.

PoE Adapter 12V

PoE adapter for AP-1800 Access Point

The PoE (Power over Ethernet) adapter can drive one single AP-1800 Access Point. If additional access points are daisy-chained, they must have local power. The Access Point that uses PoE must be connected directly to a PoE-enabled switch. If multiple Access Points require PoE, they must be connected in a star topology, with each AP attached directly to the switch. The PoE adapter is a convenient option if local power is hard to arrange in the location where the AP is mounted. The PoE adapter for the AP-1800 Access Point comes with all the plugs and cables required: PoE splitter, DC-cable, barrel adapter, Ethernet cable (yellow, CAT6), Ethernet cable (gray, CAT5, provided as a spare).

BP-240 Battery

Rechargeable Lithium-Ion battery for TR-1800

This rechargeable battery powers the TR-1800 beltpack for up to 17 hours of normal use. It may be charged in the TR-1800, or using the CHG-240 four-bay charger.

CHG-240 Four-Bay Charger

Four-bay charger for BP-240

Charges up to four Lithium-Ion batteries in approximately 90 minutes. CHG-240 is available in a North American and a European version.

ANT-1800 Spare Antenna

Spare antenna for AP-1800 Access Point

The AP-1800 access point comes already with two antennas. Users who need one spare antenna can order this accessory separately. ANT-1800 may be rotated and tilted, to optimize the radio coverage from the Access Point. The same antenna is used for 1.88-1.90 GHz and 1.92-1.93 GHz.

AP-1800 MT BRKT Pole Mount Bracket

Pole-mount bracket for AP-1800 Access Point

The AP-1800 MT BRKT is available separately, for mounting the AP-1800 on a pole, in a horizontal or vertical orientation. This may be a convenient option for temporary mounting. The AP-1800 MT BRKT comes with metric screws for attaching the AP-1800 to the bracket.

Model name	Description
AP-1800	Access point 1.92 – 1.93 GHz
AP-1800 EU	Access point 1.88 – 1.90 GHz
TR-1800	Beltpack 1.92 – 1.93 GHz
TR-1800 EU	Beltpack 1.88 – 1.90 GHz
TR-1800 Holster	Holster for TR-1800 & TR-1800 EU
24-PSE	Spare power supply for TR-1800 & TR-1800 EU
ANT1800	Spare antenna (qty 1) for AP-1800 & AP-1800 EU
AP1800 MT BRKT	Pole mount kit for AP-1800 & AP-1800 EU
PoE Adapter 12V	Power over Ethernet adapter, 12 V
CHG-240, NA	Four-bay charger for BP-240, N. A.
CHG-240, EU	Four-bay charger for BP-240, EU/UK
BP-240	Spare Lithium battery for TR-1800 & TR-1800 EU

WIRELESS PARTYLINE

BASE STATIONS, BELTPACKS, ACCESSORIES

WIRELESS PARTYLINE

BTR-700

BTR-700

Single-Channel UHF Synthesized Wireless Intercom

THE MOST VERSATILE WIRELESS INTERCOM EVER

- TR-700 Wireless Beltpacks — Four beltpacks per base station. Each BTR-700 base station can support up to four beltpacks in full-time transmit, full duplex operation. Multiple base station/beltpack systems can be used together to meet the needs of virtually any wireless communications application.
- Frequency Agile — Choose from 1440 user selectable frequencies using the BTR-700 graphical user interface. Frequencies can be selected from groups of intermode free choices, or any frequency in 25 kHz increments. Select from 720 TX and 720 RX frequencies each from independent 18 MHz operational bands.
- UHF Operation — Both the BTR-700 and the TR-700 operate in the UHF band from 518 to 722 MHz. Bases and beltpacks operate in specific 18 MHz operational bands.
- Enhanced ClearScan Frequency Auto Selection And Graphical User Interface — Intermodulation-Free Factory Selected Groups — Each BTR-700 system comes with 24 factory-selected, intermodulation-avoiding groups that allows the user to get started right out of the box.
- “Fifth Person” Talk/Listen Station At Base — The BTR-700 base station features a full talk/listen headset station so that an additional user can communicate on the intercom channel.
- Intelligent Power Control — This breakthrough technology takes system range and performance to a whole new level. Each beltpack senses when it is close to the base station and intelligently reduces its output by 10 dB. This effectively eliminates overloading the base station receiver front end, which is the primary cause for the “near-far” desensing problem experienced in other wireless intercoms.

- Frequency agile
- 1440 selectable frequencies
- ClearScan auto frequency selection
- Four beltpacks per base station
- Cast magnesium beltpacks

TR-700 beltpack

- Cast Magnesium Beltpacks — TR-700 beltpacks are constructed of extremely light, strong and durable cast magnesium. Using magnesium substantially decreases the weight of the beltpack while assuring the utmost ruggedness and durability.
- Detachable Beltpack Antennas — TR-700 beltpacks feature detachable antennas that utilize stud type threaded connectors that do not have a fragile center pin to break off or bend. Detachable antennas make storage or shipping easy.
- Two Great Battery Options — TR-700 beltpacks can be operated from standard alkaline AA batteries that provide over 14 hours of continuous duty operation. For applications where rechargeable batteries are required, optional NiMH battery packs are available. NiMH batteries do not develop harmful memories like NiCads and offer a full 12 hours of operation. Drop-in chargers are also available in single and four-gang configurations.

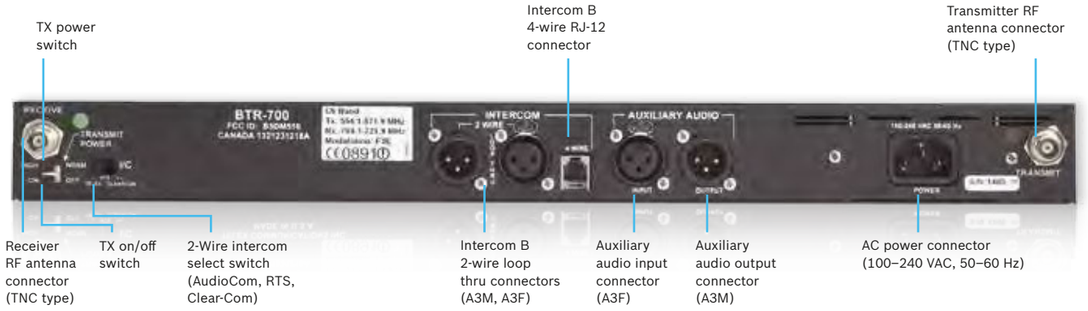

BTR-800

BTR-800

2-Channel UHF Synthesized Wireless Intercom

THE MOST VERSATILE WIRELESS INTERCOM EVER

- TR-800 and TR-825 Wireless Beltpacks — Four beltpacks per base station. Each BTR-800 base station can support up to four beltpacks in full-time transmit, full-duplex operation. Multiple base station/beltpack systems can be used together to meet the needs of virtually any wireless communications application.
- Frequency Agile — Choose from 1440 user selectable frequencies using the BTR-800 graphical user interface. Frequencies can be selected from factory preset groups of intermode free choices or any frequency in 25 kHz increments. Select from 720 TX and 720 RX frequencies each from independent 18 MHz operational bands.
- UHF Operation — The BTR-800, TR-800 and TR-825 operate in the UHF band from 470 to 722 MHz. Bases and beltpacks operate in specific 18 MHz operational bands.
- Enhanced ClearScan Frequency Auto Selection and Graphical User Interface.
- Intermodulation-Free Factory Selected Groups — Each BTR-800 system comes with 24 factory-selected, intermodulation-avoiding groups that allows the user to get started right out of the box.
- Two-Channel Intercom Access From Each Beltpack — Hardwired channels are run to the BTR-800 base station and can be 2-wire, 4-wire or mixed. The BTR-800 is fully compatible with AudioCom, RTS and Clear-Com hardwired intercom systems.
- Dual Listen Operation — Each TR-825 beltpack provides two volume controls; one for each intercom channel that allows for individual level control. Listen to production in one ear and tech in the other ear. The TR-825 can operate in either stereo (split-feed) or mono mode.

- Frequency agile
- 1440 selectable frequencies
- Two independent intercom channels
- ClearScan auto frequency selection
- Wireless talk around (broadcast ISO)

- Stage announce output with relay closure
- Dual Listen Operation (TR-825)
- Four beltpacks per base station
- Cast magnesium beltpacks

- Stage Announce Output With Relay Closure — Each beltpack can initiate the stage announce feature. The user's audio is routed out the back of the base station via a 3-pin XLR connector. The signal is dry, line level +8 dB and adjustable. A convenient relay closure is provided for triggering two-way radios, IFB sends, green-room speakers or any other closure activated device.
- Wireless Talk Around (Broadcast ISO) — Each beltpack can momentarily route its audio only to the other wireless beltpacks on its current channel with the push of a button. The user's audio is lifted off of the intercom bus so that only the other wireless beltpacks can hear.
- "Fifth Person" Talk/Listen Station At Base — The BTR-800 base station features a full talk/listen headset station so that an additional user can communicate on one, the other or both intercom channels at once.
- Intelligent Power Control — This breakthrough technology takes system range and performance to a whole new level. Each beltpack senses when it is close to the base station and intelligently reduces its output by 10 dB. This effectively eliminates overloading the base station receiver front end, which is the primary cause for the "near-far" desensing problem experienced in other wireless intercoms.
- Cast Magnesium Beltpacks — TR-800 and TR-825 beltpacks are constructed of extremely light, strong and durable cast magnesium. Using magnesium substantially decreases the weight of the beltpack while assuring the utmost ruggedness and durability.
- Two Great Battery Options — TR-800 and TR-825 beltpacks can be operated from standard alkaline AA batteries that provide up to 14 hours of continuous duty operation. For applications where rechargeable batteries are required, optional NiMH battery packs are available. NiMH batteries do not develop harmful memories like NiCads and offer up to 12 hours of operation. Drop-in chargers are also available in single and four-gang configurations.
- Detachable Beltpack Antennas — TR-800 and TR-825 beltpacks feature detachable antennas that utilize stud type threaded connectors that do not have a fragile center pin to break off or bend. Detachable antennas make storage or shipping easy.

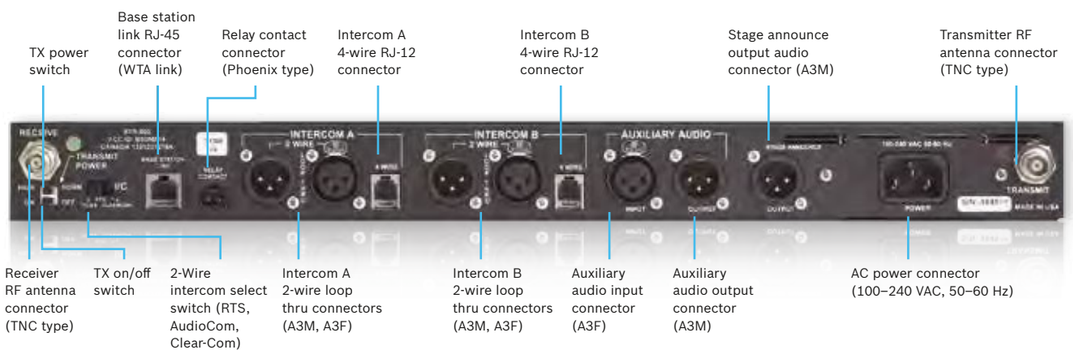

BTR-80N

BTR-80N

2-Channel UHF Synthesized Wireless Intercom System

OFFERING THE MOST COMPREHENSIVE SET OF FEATURES IN WIRELESS INTERCOM SYSTEMS

The BTR-80N narrow band wireless intercom system offers the most comprehensive, user-friendly and versatile set of features available in wireless intercom systems anywhere in the world. Providing an unprecedented 25 kHz of modulated band width, the BTR-80N narrow band system allows more users per channel in the cramped UHF spectrum. Combining the award-winning performance of the BTR-800 wireless intercom system with revolutionary narrow band technology and additional innovative features, the BTR-80N is the best-performing, most versatile wireless intercom system ever made.

While providing excellent audio performance, the narrow band system is based on the award-winning and world leading BTR-800 wireless intercom system and provides all of the standard features of the BTR-800 system, such as DSP and Intelligent Power Control, and more. The BTR-80N narrow band systems offers up to four full-duplex wireless TR-80N or TR-82N beltpacks per base station. An unlimited number of additional beltpacks can be added in half-duplex operation. Additional features include selectable transmitter power output, selectable receiver squelch control, RF meter display on base station and beltpack displays, remote battery indicators on base station display, low battery tone indicator on beltpack, AC or DC power input on base station, simultaneous 2-wire and 4-wire operation, and more.

- User-adjustable receiver squelch control
- RF meter on BTR-80N, TR-80N and TR-82N
- Beltpack battery gauge on BTR-80N display
- Ability to turn off remote beltpack transmitter from base station
- BTR-80N is easily adapted for two transmitter output
- BTR-80N is designed for AC or DC power input
- Auxiliary audio input is assignable with level control

- UHF Operation — The BTR-80N, TR-80N and TR-82N operate in the UHF band from 482 to 722 MHz and operate in specific 18 MHz frequency bands. An industry-leading 32 frequency band combinations are available to order.
- Frequency Agile — Choose from 1440 user selectable frequencies in 25 kHz increments or select frequency plans from preset intermodulation-avoiding groups. The independent 18 MHz frequency bands provide 720 TX and 720 RX selectable frequencies.
- Selectable Output Power — The BTR-80N, TR-80N and TR-82N provide a user-selectable transmit output power. The BTR-80N has a maximum output power of 249 mW down to 10 mW with an additional setting to turn off transmit power to each individual transmitter. The TR-80N and TR-82N have a maximum output power of 100 mW down to 5 mW with an additional setting to turn on the auto Intelligent Power Control feature to provide outstanding “near-far” operation.
- Engineering Defined Frequency Plans — Each narrow band system comes with 36 engineering selected, intermodulation-avoiding groups of channel plans that allows the user to get the system operational right out of the box.
- Two-Channel Intercom Access — Hardwired intercom channels that are run to the BTR-80N base station can be 2-wire (partyline) or 4-wire (digital matrix). These intercom inputs to the BTR-80N can be set up to be individual per channel or they can be mixed on a channel. Individual adjustment for in and out level control are provided in the BTR-80N front panel user interface.
- Flexible Number of Beltpack Users per Base Station — In full-duplex operation, the BTR-80N will support up to 4 TR-80N or TR-82N beltpacks. By placing TR-80N or TR-82N beltpacks in Push-to-Transmit operation (half-duplex), you can expand your system to multiple users on one BTR-80N base station. When the TR-80N or TR-82N are placed in Push-to-Transmit operation, the intelligence of the narrow band system provides a First-On-Latch-Out feature that will not allow the beltpacks to interfere with each other when operating on the same frequency. This feature provides future expansion possibilities and will allow multiple users on the same channel whose primary function is to listen all the time and talk infrequently.
- Enhanced ClearScan Frequency Scan and Auto Selection — This powerful frequency scanning and selection feature is easily activated and progress is easily monitored on the BTR-80N, TR-80N and TR-82N display screens. Results are provided and users have the option to review, accept or reject the results. This dynamic feature allows system frequency selection and set up in just minutes in a new or unknown venue.
- Battery Options — The TR-80N and TR-82N beltpacks can operate from standard alkaline AA batteries or from the optional NiMH battery packs. Operation on alkaline batteries provides up to 12 hours of continuous duty and up to 10 hours on NiMH. Drop-in chargers are available in single and four-gang configurations.

- “Fifth person” talk/listen user station at the BTR-80N base station
- Wireless talk around (broadcast ISO)
- Stage announce output with relay closure
- Intelligent power control
- TR-82N dual listen operation
- Cast magnesium beltpacks
- Beltpack low battery indicator with tone warning

UHF ACCESSORIES

TRH-2

Leather Holster for TR-700 & TR-800

ALP-450

UHF Directional Antenna

ALP-600M

Telescoping Antenna Mast

ALP-600

Bi-directional log periodic antenna. Covers 520-760 MHz.

ALP-700

Bi-directional log periodic antenna. Covers 470-760 MHz.

BC-800NM

1-Bay Charger including NiMH Battery Pack

BC-800NM4

4-Bay Charger including NiMH Battery Packs

AB-2

Universal Bracket for ½ Wave Antenna with 10' Coax Cable

RA-5

UHF Directional Antenna

COMBINER/SPLITTER

ACS-101*

Broadband Antenna Combiner/ Splitter

The ACS-101 amplified broadband combiner/splitter makes it possible to operate 10 UHF wireless intercom base transceivers using only two antennas. In addition to accommodating ten transmit and 10 receiver antennas, it provides power connection for up to 10 base transceivers. It also features excellent output isolation (better than SC-600). The ACS-101 is necessary in multi-frequency systems to prevent intermodulation. The ACS-101 is an ideal complement to your BTR-700, BTR-800 or BTR-80N (BTR-800/BTR-80N set to normal output power).

*The product is not available in countries where CE certification is necessary

APS-1

2-Way Combiner/Splitter

The APS-1 is a passive broadband combiner/splitter that makes it possible to combine two antennas to one (receive), or split one antenna to two (transmit).

System Configuration

for the typical system configuration using the ACS-101 to support 10 BTR-1 base stations.

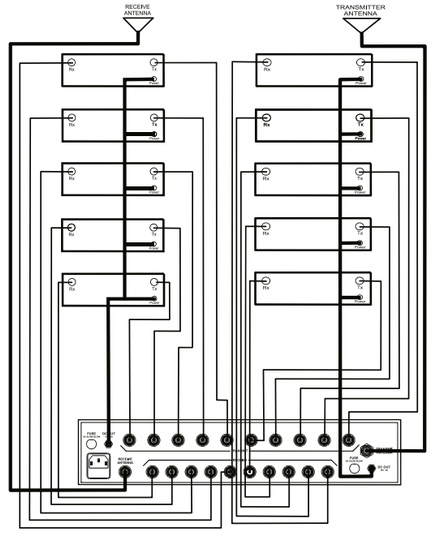

- Two models to choose from
- Reduces 20 antennas to two (ACS-101) or reduces two antennas to one (APS-1)
- Extremely low intermode production
- Compatible with BTR-700 and BTR-800 systems
- One year warranty
- Handles both transmit and receive
- Rugged and durable construction
- Made in the USA

UHF Base Station Accessories

AB-2	Universal bracket for CLA-X ½ wave antennas with 10′ coax
ALP-450	Directional log periodic antenna. Covers 450–900 MHz. Forward coverage pattern increases signal gain up to 5 dB. Supplied with mounting hardware for wall or mic stand and 10′ coaxial cable. Measures 9½″ L x 11″ H painted matte black.
ALP-600	Bi-directional log periodic antenna. Covers 520–760 MHz. Includes mounting hardware and 10′ (3 m) coaxial cable with TNC connector.
ALP-600B	ALP-600 antenna bracket kit
ALP-600M	ALP-600 antenna mast-telescoping
ALP-700	Bi-directional log periodic antenna. Covers 470-760 MHz. Unique side-to side and front to back coverage pattern increases single gain up to 1,8dBd. Includes mounting hardware, clamp and 10’ (3 meters) coaxial cable with TNC connector. Painted black with TNC connector. Measures 274,6mm x 422mm (L x H).
APS-1	Two to one antenna combiner/splitter with TNC connectors
CXU	50 Ω low loss coaxial cable with TNC connectors (multiple lengths available)
FA	½ wave colinear antenna (multiple frequency ranges)
RM-800	Rackmount reinforcement for BTR-800/ BTR-700
TP-2	TNC 50 Ω termination plug and ACS-101 antenna combiner
TP-3	XLR-3 Intercom “dummy load” plug (AudioCom)
TP-3R	XLR-3 Intercom “dummy load” plug (RTS)

UHF Beltpack Accessories

BC-800NM Euro	1 bay charger w/switching power supply, Euro cord, NiMH pack
BC-800NM4 Euro	4 bay charger w/switching power supply, 4 NiMH battery packs, Euro cord
BP-700	Alkaline battery holder TR-700/TR-800/TR-825/TR-80N/TR-82N/ TR-1/RKP-4
BP-800NM	NiMH battery pack TR-700/TR-800/TR-825/TR-80N/TR-82N/ TR-1/RKP-4
BPA 1/4	Wave beltpack antenna (multiple frequency ranges)
SBC-1	Swivel beltclip for TR-700/TR-800/ TR-700/TR-800/TR-825/TR-1/RKP-4
TRH-2	Heavy duty leather swivel holster with belt loop for TR-700/TR-800/TR-80N

UHF FREQUENCY BAND CHART

BTR-80N

The BTR-80N system operates in TV channels 16 to 36 and 38 to 55. This is the frequency range of 482 to 608 and 614 to 722 MHz. The BTR-80N frequency bands are typically 18 MHz wide.

The BTR-80N systems are offered on 32 standard frequency band splits noted as follows*:

F1, F2, F3, F4, F5, F6
H1, H2, H3, H4, H5, H6
A1, A2, A3, A4, A5, A6
B2, B3, B4, B5, B6
C3, C4, C5, C6
D5, D6, D7
E5, E6

*The frequency band D7 is not available in countries where CE certification is necessary.

BTR-800 and BTR-700

The BTR-800 and BTR-700 systems operate in TV channels 14 to 36 and 38 to 55. This is the frequency range of 470 to 608 and 614 to 722 MHz. The BTR-800 and BTR-700 frequency bands are 18 MHz wide.

Frequency bands F to C are always BTR-800/BTR-700 transmit bands (TR-800/TR-825/TR-700 receive bands) and frequency bands 1 to 6 and 88 are BTR-800/BTR-700 receive bands (TR-800/TR-825/TR-700 transmit bands).

The BTR-800 system is offered on 17 different frequency band splits noted as follows*:

E88
F1, F2, F3, F4
H1, H2, H3, H4
A2, A3, A4
B3, B4, B6
C3, C4, C6

The BTR-700 system is offered on 3 standard frequency band splits noted as follows:

A2, B4, C6

*The frequency bands E88, F2, F4, H2, H4, A4, B3, B6, C3, C4 are not available in countries where CE certification is necessary

RTS Intercoms UHF Frequency Band Chart

BTR80N	TV CHANNEL	START FREQUENCY	END FREQUENCY	TV CHANNEL (NTSC)	BTR-800	BTR-700
	14	470	476	14	88	
	15	476	482	15		
F	16	482	488	16		
	17	488	494	17	F	
	18	494	500	18		
H	19	500	506	19	H	
	20	506	512	20		
	21	512	518	21		
	22	518	524	22		
A	23	524	530	23	A	A
	24	530	536	24		
B	25	536	542	25	B	B
	26	542	548	26		
	27	548	554	27		
	28	554	560	28		
C	29	560	566	29	C	C
	30	566	572	30		
D	31	572	578	31		
	32	578	584	32		
	33	584	590	33		
	34	590	596	34		
E	35	596	602	35	E	
	36	602	608	36		
NOT USED	37	608	614	37	NOT USED	NOT USED
	38	614	620	38		
1	39	620	626	39	1	
	40	626	632	40		
2	41	632	638	41	2	2
	42	638	644	42		
	43	644	650	43		
	44	650	656	44		
3	45	656	662	45	3	
	46	662	668	46		
4	47	668	674	47	4	4
	48	674	680	48		
	49	680	686	49		
	50	686	692	50		
5	51	692	698	51		
	52	698	704	52		
6	53	704	710	53	6	6
	54	710	716	54		
	55	716	722	55		
	56	722	728	56		
7	57	728	734	57		
	58	734	740	58		
	59	740	746	59		

BTR-240

BTR-240

2.4 GHz Wireless Base System

WIRELESS IFB

CONNECTION FLEXIBILITY:

- The BTR-240 gives you a wide range of interfacing options so you can build a system that precisely fits your needs, whether over a wired or wireless network.
- A 2- and 4-wire intercom interface and XLR in/out for connecting to general audio systems gives you the flexibility to utilize communications equipment from across a wide range of manufacturers.
- In addition to connecting to a WiFi network in a large facility, the BTR-240 can serve as a backup via an Ethernet/Cat-5 wired connection. Now facilities like schools, houses of worship, and theatres can easily extend their existing partylines into the wireless world.

FP-11

2.4 GHz Flat-Panel Directional Antenna

- License Free 2.4 GHz, IEEE 802.11b WLAN technology
- Expand coverage using BTR-24 access points
- Multi-level security and audio encryption
- 2-wire and 4-wire intercom interface
- ClearScan channel selection
- Auto-select Electret or Dynamic microphone
- Choice of two (2) independent or simultaneous audio channels
- TR-240 beltpacks operate wired or wireless
- Eight (8) full-duplex beltpacks with virtually unlimited number of half-duplex beltpacks
- TR-240 beltpacks can operate as an access point
- Multiple antenna options and accessories
- Durable ABS construction
- Easy-to-read LCD indicates system status
- Removable Li-Ion batteries with wide temperature range and up to eight (8) hours of operation

TT-16 & TR-16

The TT-16 base station transmitter and the TR-16 beltpack talent receiver is a 16-channel synthesized wireless IFB system designed to provide a convenient wireless link to on-air talent in the studio or in the field at remote locations. Operating in the low band VHF 64–68 MHz range (NTSC TV Ch 3 and 4), the units operate reliably at distances of over 225 m. In unoccupied television channels, up to five TT-16 transmitters will operate simultaneously within the same location.

TT-16*

16-Channel Broadcast Wireless IFB Transmitter

The TT-16 features 16 user-selectable frequencies controlled from front panel control buttons. A backlit LCD display allows the user to select the RF channel used, change hi/lo RF transmit power, select intercom input source and adjust the input levels. The Enhanced Dynamic Range feature greatly improves the Signal-to-Noise Ratio and works with the TR-16 talent receiver to provide clearer, more dynamic audio. The TT-16 has a 3-pin XLR connector on the back of the unit that will accept intercom signal input and is selectable between RTS two-wire intercoms, AudioCom or Clear-Com. Other types of balanced audio input can also be used. The TT-16 also has a 1/4” input jack on the back of the unit that will accept unbalanced line level signal input. Selection of the intercom type used and signal level adjustment is made from the front panel.

*The product is not available in countries where CE certification is necessary

TR-16*

16-Channel Broadcast Wireless IFB Talent Receiver

Like the TT-16, the TR-16 features 16 user-selectable frequencies controlled from top panel control buttons. The TR-16 is designed with a 3.5 mm earphone connector to be used with standard IFB earpieces, such as the RTS Telethin announcers earpiece system or any other 8–500 Ω earphone. The TR-16 features a selectable high frequency boost control to equalize the high frequency loss associated with the use of behind the collar acoustic tubes and earphone drivers. Additionally, the TR-16 has Enhanced Dynamic Range for increased dynamic range. Operating on two AA batteries (up to 20 hours on alkaline cells), the TR-16 also features a low battery indicator on the backlit LCD display when 10% of battery life remains.

*The product is not available in countries where CE certification is necessary

- 16 user-selectable channels
- Enhanced Dynamic Range for improved dynamic audio
- Balanced or unbalanced audio input
- Covers TV Ch 3 and TV Ch 4
- 20 hours of operation on two AA alkaline batteries

2.4 GHz Wireless Intercom Accessories

Model	Description
ANT-FP	Flat panel dual element directional antenna
ANT-FPM	Metal tilt & swivel antenna mounting bracket for ANT-FP
BP-240	Lithium Ion battery pack for TR-240
CC-24	Carry base for BTR-24 system
CHG-240	4 bay charger to charge 4 pcs BP-240 Lithium Ion batteries in parallel
FP-11	2.4 GHz flat-panel directional antenna
HOL-240	Holster for TR-240
LG-PS	US power supply for BTR-24/TR-24
RA-3	Omnidirectional antenna (3 dB) with TNC reverse polarity
RA-5	2.4 GHz omnidirectional antenna, magnetic mount with TNC reverse polarity connector
RA-7	Omnidirectional antenna (7 dB) with TNC reverse polarity connector
RPT-3	3′ coax with TNC reverse polarity connector
RPT-10	10′ coax with TNC reverse polarity connector
TNC-RP	TNC reverse polarity coupler (jack-to-jack)

WIRED PARTYLINE

USER STATIONS, POWER SUPPLIES BELTPACKS, ACCESSORIES

WIRED PARTYLINE

POWER SUPPLY

Power supplies are the heart of partyline intercom systems. They supply operating voltage to beltpacks and many user stations. Unique, short-circuit reset circuitry design and unparalleled mechanical engineering ensures reliable, trouble-free operation for years to come. With all of the things you have to worry about, power supplies should not be one of them.

PS-20

Power Supply

The PS-20 is the latest power supply. The PS-20 features 2- and 4-channel operation, RTS monitoring, 2-channel program input, audio linking and 3-mode operation: RTS 2-channel, RTS 4-channel and Clear-Com mode. It also has double the power output per channel of previous RTS power supplies, which will substantially increase the number of user stations and beltpacks that can be connected. The PS-20 uses a unique current-pump circuit, which improves performance in applications with very long wires.

The PS-20 features two channels of communication where both channels are “wet,” meaning there is power on each channel (RTS 2-channel mode). In RTS 4-channel mode, the audio signals and DC exist on the same wire. The PS-20 can also be switched into Clear-Com mode. The PS-20 has a 3-pin XLR (male) connector on the front of the system, where a RTS user station can connect and monitor activity on either or both channels. A single PS-20 power supply has 1.8 amps per channel, which means the user can power up more stations. If additional user stations or beltpacks are needed, two PS-20s can be joined together to double the power capability. A pair of standard stereo plug connectors are available on the back of the power supply to connect two PS-20s through audio linking as well. The 3-pin XLR female program input connector can be used to send audio to both CH 1 and/or CH 2.

MASTER STATION

RTS two-wire intercom master stations have been the industry standard for professional partyline communication systems for more than 25 years. With their flexible configurations, ease of use and legendary reliability, they are the elite core communications control tools.

RTS two-wire intercom master stations are installed in major broadcast and industrial application venues worldwide.

MCE-325

2- or 4-Channel User-Programmable Master Station

The MCE-325 is a 4-channel, programmable intercom station. It may be used as a headset station or, with the addition of the MCS-325 modular speaker, as a speaker station. It may be mounted in a console or equipment rack via optional mounting kits. The MCE-325 can be used with either 2-wire or 4-wire intercom lines, or a combination of both. The MCE-325 can be interfaced to a variety of external devices, including external program sources, 2-way radios, paging systems and satellite circuits. The MCE-325 can be ordered for 4- or 5-pin operation.

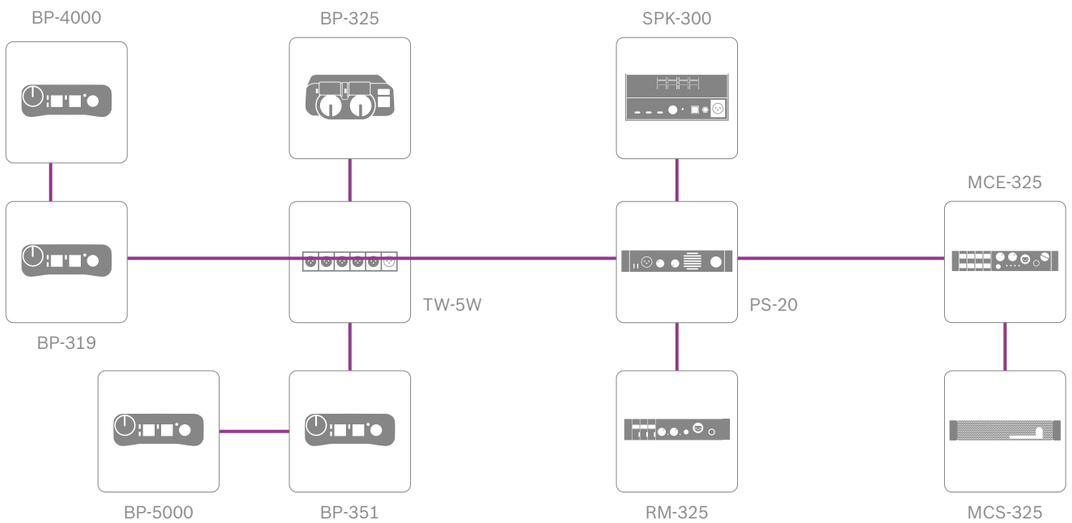

USER STATIONS

RTS two-wire intercom user stations employ a unique modular design that enables a few station types to be configured into a multitude of communications solutions. Rugged and dependable RTS two-wire intercom user stations form the widest variety of stationary communications stations in the industry. RTS two-wire intercom user stations are the perfect choice for a wide range of applications regardless of what physical profile is required. RTS is the only two-wire protocol that allows two communication channels to be connected on a single standard microphone cable.

MRT-327

User Station

The model MRT-327 is a 2-channel intercom station for use in RTS two-wire intercom systems. It may be used as a headset station or as a speaker station (with an optional MCS-325 modular speaker listed on page 52). The MRT-327 may be installed in optional console or rackmount configurations. The MRT-327 can be ordered for 4- or 5-pin operation.

RM-325

User Station

The RM-325 is a 2-channel binaural headset station. Features stereo (split-feed) operation, microphone limiter circuit, two powerful headphone amps and simplified operational controls, including individual volume adjusts. Packaged in ½-rack by 1RU metal housing for added durability.

SPK-300L

Portable Desktop Speaker User Station

The SPK-300L is a desktop station with built-in speaker. It can be used as a “public” listen box via built-in speaker or privately through the headset connection. Features a channel-select switch, call light, speaker on/off switch and dual-purpose portable desktop volume control. Packaged in a rugged, all-metal housing perfect for table-top operation.

CM-300L

Console-Mount User Station

Two-channel select, console-mount user station. Features a microphone limiter circuit, separate dynamic and carbon microphone inputs, and a silent channel select switch. Solid metal front and open back for console mounting.

WM-300L

Wallmount User Station

Two-channel select, wallmount headset station. Features channel select switch, call light and headset volume control. Fits in standard two-gang outlet box.

WMS-300L

Dual-Channel Wallmount
User Station with Speaker

Two-channel select, wallmount speaker user station. Features channel select switch, call light and a speaker on/off switch. Fits in standard four-gang outlet box.

Which user station is right for you?

Feature	MRT-327	RM-325	SPK-300L	CM-300L	WM-300L	WMS-300L
Keys	Pushbutton	Pushbutton	Toggle Switch	Toggle Switch	Toggle Switch	Toggle Switch
Mounting	Rackmount or Desktop	Rackmount or Desktop	Desktop	Console-Mount	Wallmount	Wallmount
Speaker	MCS-325	N/A	Internal	N/A	N/A	Internal
Call Light	Yes	Yes	Yes	Yes	Yes	Yes
Power Consumption						
Quiescent	45 mA ±10%	60 mA ±10%	10–40 mA	23 mA ±10%	10–40 mA ±10%	10–40 mA
Operating 25 Ω Phones	75 mA ±10%	100 mA ±10%	50 mA	37 mA ±10%	50 mA	50 mA
Operating 25 Ω Phones + Call Light	90 mA ±10%	125 mA ±10%	70 mA	60 mA ±10%	75 mA	70 mA
Operating 8 Ω Speaker	240 mA ±10%	300 mA ±10%	100 mA			100 mA
Operating 8 Ω Speaker + Call Light	300 mA ±10%	360 mA ±10%				

UNIVERSAL BELTPACKS

The new beltpack models BP-4000 and BP-5000 come in a new design and a plug & play concept helping rental companies and large broadcasters to improve their performance and save time and money in their day-to-day business.

BP-4000

Single-Channel
Portable Beltpack

BP-5000

Dual-Channel
Portable Beltpack

FEATURES

- Intelligent power management – Due to a reduced power consumption up to 40 daisy-chained beltpacks can be powered by only one PS-20 power supply. A current pump circuit constantly monitors the cable length versus the actual current consumption to ensure the beltpacks receive the voltage they need.
- Enhanced talk button control – Offers the choice between “always on”, “always off” or “switching”. In addition the beltpack has a blinking call light.
- Remote kill function – Allows any user to send an inaudible “microphone kill signal” which instantly mutes every beltpack mic in the partyline. This feature can be useful when a user inadvertently left the mic open. It is also possible to override the mic-kill function.
- Voice guidance easy factory default reset – Short voice prompts help the user navigating through the menu options eliminating the need to configure internal jumpers or switches. The devices can be easily reset to factory defaults.
- Headset connectivity – Both units are available with either 4- or 5-pin XLR headset connectors allowing for a wide range of headset options; both dynamic and electret headset microphones are supported.

MENU SYSTEM

The BP-4000 and BP-5000 beltpacks have multiple programming options and feature voice guidance for easy navigation. Voice prompts are spoken in English, all different menu functions explained:

- **Mode** – allows the user to select the system configuration
- **Talk Mode** – customizes the function of the talk button
- **Mic Gain** – adjusts the microphone amplifier setting
- **Sidetone Adjust** – adjusts how loud my voice is being heard in my headset
- **Incoming Call Beep** – enables or disables the call beep function
- **Channel Lock** – prevents users from listening to the wrong channel
- **Power** – to balance power draw in systems with many beltpacks
- **Send Mic Kill** – mutes all microphones on the line to prevent unwanted background noise
- **Mic Kill** – option to ignore a Mic Kill signal from another user
- **LEDs** – option to dim the LEDs for all applications where light may be undesirable
- **Factory Reset** – restores all settings to their factory defaults

BELTPACKS

Using the latest in space-age materials, RTS two-wire intercom beltpacks are mechanically engineered to be rugged and dependable. Unique audio circuitry is perfect for either high- or low-noise environments while maintaining maximum voice intelligibility.

BP-325

Dual-Channel Binaural
Programmable Beltpack

The BP-325 is a portable beltpack for use with RTS two-wire intercom systems. The BP-325 is a binaural, programmable 2-channel beltpack with program-input capability. For use with a dynamic microphone only. The BP-325 consumes 65 to 85 mA of power.

IFB SYSTEM PERIPHERALS

Interrupt Fold Back (IFB) is a broadcast term used to describe the process of cueing on-air talent. RTS IFB equipment is designed with a modular approach that meets the needs of not only large television networks, but can also be configured for any one-way communication needs. With multiple program audio sources and individual or simultaneous interrupts, the RTS series of IFB and ISO products is perfect for any talent-cueing need.

The 4010 is a central IFB electronics station. It contains all necessary control functions and electronics, including line power, to provide an active link between the 4001 and 4002 control stations and the 4030 and IFB-325 user stations. Each 4010 can handle up to four user stations, and has a separate volume control for each one.

The IFB-828 interfaces up to eight 4030 or IFB-325 beltpacks to any RTS digital matrix intercom system and provides power to the beltpacks. The IFB-828 may also be used as a simple program interface to feed two separate program sources to each of eight 4030 beltpacks (16 program sources to eight beltpacks total).

The 4030 and IFB-325 are listen-only beltpacks with two and one channels, respectively. The 4030 contains electronics to provide a stereo audio signal to the user. The IFB-325 provides a mono (either interrupt/non-interrupt selected via 4010) audio signal to the user. The 4030 and IFB-325 feature volume controls in extruded aluminum cases. For earset options see page 62.

The 4001 and 4002 are IFB control stations with four and eight channels, respectively. Thus, the control stations separate talent feeds per channel plus one (4001) or two (4002) Stage Announce sends. The control stations feature two distinct audio sends per IFB channel for interrupt/non-interrupt or multiple program feeds. Each unit has illuminated switches, supports four priority levels and a gooseneck mic connector. An optional rack kit is also available. Requires one 4010 central IFB. The 4025A splitter is used to connect multiple control stations to the 4010. Two 4001 control stations can be connected to a single 4010, using the splitter. Similarly, two 4002 control stations can be connected to two 4010, using two splitters, as shown in the diagram below.

Digital Matrix IFB System

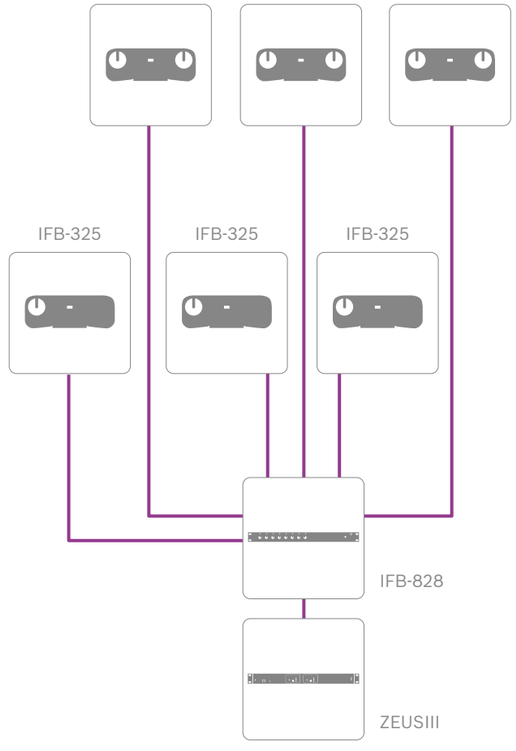

Partyline IFB System

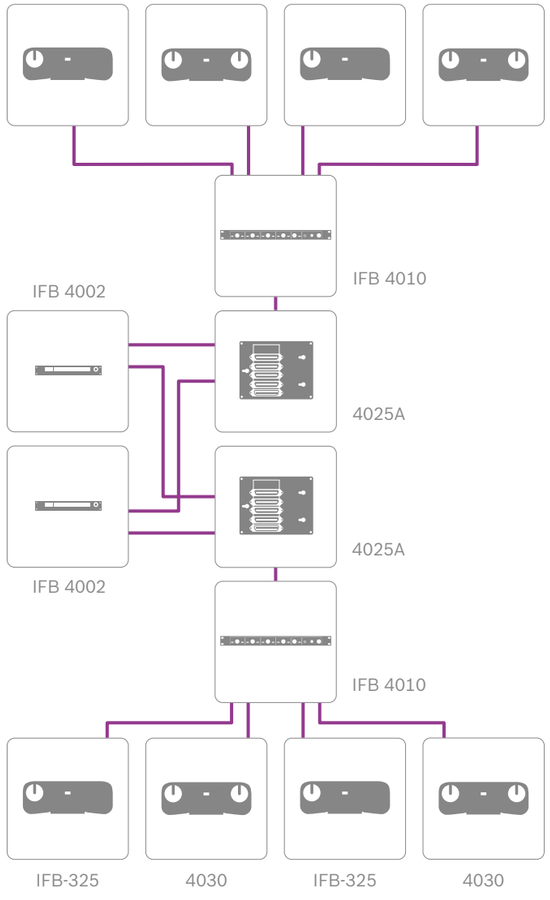

ACCESSORIES

RTS offers a full line of products to complete your communications system, including interfaces to partyline intercoms, cables, telephone lines and relays. Accessories also include control panels for IFB levels and assignments, panels for adjusting system audio levels, microphones and 4-wire beltpacks.

RTS two-wire intercom source assignment panel accessories are a key element in large, high-end RTS two-wire intercom partyline systems. With the ability to turn a standard 2-bus communications system into a 12 or more bus configuration, source assignment panels are vital to system expansion. Increasing the number of usable communication busses allows the system to be tailored to individual user needs.

SAP-1626

2RU Source Assignment Panel

It assigns any one of 12 intercom channels and/or three program audio channels to 26 separate 2-channel user stations via convenient thumb-wheel switches. I/O provided via two 50-pin connectors. Normally used in conjunction with a BOP-220.

MCP-90-x

MCP-90-x	Electret Gooseneck Microphone
MCP-90-0	0" Gooseneck Microphone
MCP-90-8	8" Gooseneck Microphone
MCP-90-12	12" Gooseneck Microphone
MCP-90-18	18" Gooseneck Microphone

BOP-220

3RU Breakout Panel,
I/O Connector Transition Assembly

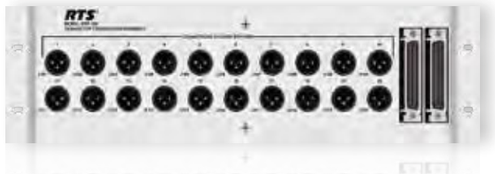

It provides a convenient interface between a SAP-1626 (25 pair 50-pin) and up to 20 user stations or strings of stations (3-pin XLR male).

SAP-612

Source Assignment Panel

It transforms a basic 2-bus intercom system into a 6-bus system via convenient slide switches. Provides six input channels and 12 2-channel 2-wire user station strings. I/O provided via two ¼", three 3-pin XLR female and twelve 3-pin XLR male connectors. Contains XLR jacks for RTS power supply.

LMS-325*

(Active) Line-Monitor Speaker Station

Part of RTS's unique modular packaging system. Features a full-range, 5 W speaker and power amp, dual-channel inputs from 2-wire or separate program inputs, and volume control. Packaged in ½ rack by 1RU metal housing for added durability and magnetically shielded for use near video monitors.

*The product is not available in countries where CE certification is necessary

MCS-325

Passive Modular Speaker

It can be combined with MCE-325 and MRT-327 to provide speaker station operation. Packaged in ½ rack by 1RU metal housing for added durability.

ACCESSORIES

MCP-1

Mounting Bracket for Two Main Components

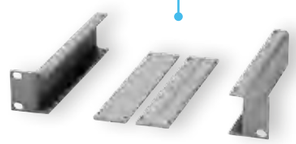

MCP-2

Single Rackmount Kit

MCP-3

Mounting Kit for One Main Component

MCP-4

Tandem Mount Kit for Two Main Components

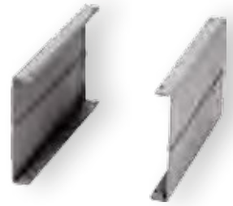

CIA-1000*

Call Light Indicator Assembly

*The product is not available in countries where CE certification is necessary

TW-5W

1 x 5 Dual-Channel 3-Pin XLR-Type Passive Splitter

TW-7W

One XLR-3F into Seven XLR-3M Out

4022

1 x 2 25 pair, 50-pin passive splitter

4025A

1 x 4 50-pin passive splitter

AUDIOCOM

MS-2002

Dual-Channel Master Station

MS-4002*

Four-Channel Master Station

EMS-4001

Four-Channel Expansion Master Station

The master stations provide unique balanced audio design that allows users to utilize the longest 2-wire partyline cable runs in the industry. The master stations offer users the ultimate in performance and flexibility. Operators can utilize headset or speaker/mic operation and have full access to all intercom channels—both individually and as “all talk”. The master station users can also utilize innovative features such as the “remote mic kill” function to silence any open mic on the intercom channel so that extraneous noise can be eliminated, backlit lettered buttons for darkened environments and the ability to operate in an unbalanced mode to be completely Clear-Com compatible.

*The product is not available in countries where CE certification is necessary

SS1002

Single-Channel Speaker Station

The single-channel can be used as speaker station and/or headset station. Features include headset operation for noise reduction and privacy; dual-purpose level control, which adjusts both the speaker volume and the headset listen volume; “remote mic kill” receive enabled so an open mic can be silenced from any user or master station; and backlit buttons for darkened environments. Clear-Com compatible.

PS4001

Four-Channel Power Supply

The PS4001 power supply supplies four isolated channels of intercom system phantom power to down line components. The PS4001 may be combined with an ES4000A expansion station to create additional intercom channels when using a US2002/PS2001L or US2000A/SPS2001 master station configuration. The PS4001 can also be used as a standalone power supply to provide power to four independent partyline channels. Rack mountable in a variety of modular configurations with one of several optional rack mount kits. Clear-Com compatible.

HEADSETS

HEADSETS, HEADPHONES, EARSETS & ACCESSORIES

ULTRA-LIGHTWEIGHT INTERCOM HEADSETS

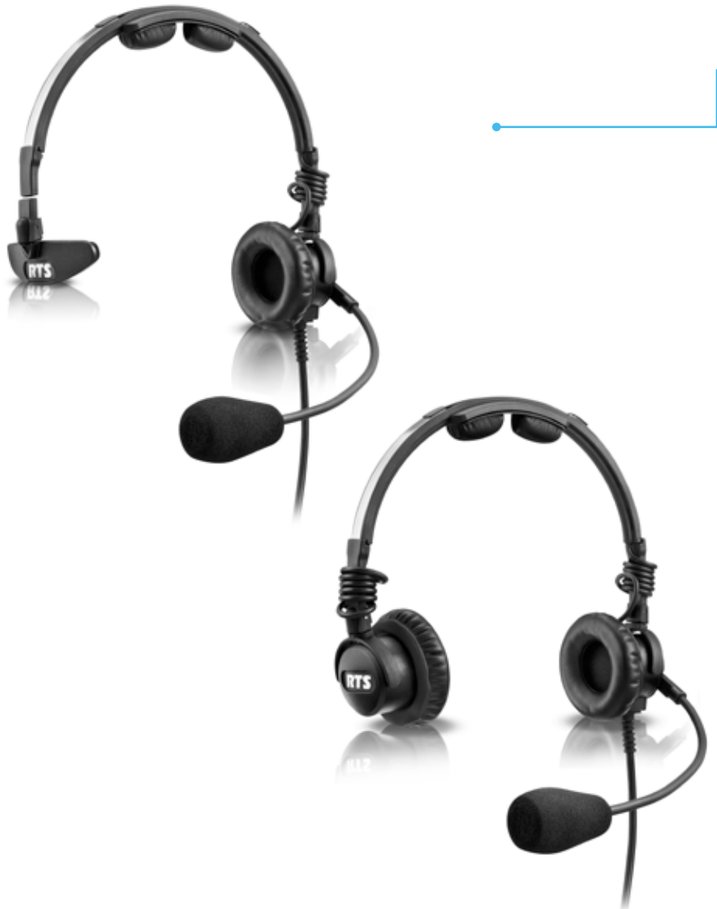

LH-300 / 302

Ultra-lightweight
intercom headsets

The LH-300 / 302 family of headsets are lightweight, single-sided and double-sided headsets for the ultimate in day-long comfort. The LH-300 / 302 family features a high-quality audio with a semi-rigid, fully adjustable boom for precise positioning on right- or left-side. The heavy-duty wide band dynamic earphones with soft, pliable ear cushions and headband pads offer a comfortable and stable fit, isolation and extended frequency response. Available with several standard connectors including 4 and 5 pin male and female XLR and 3.5 mm audio jack to fit your specific application.

LIGHTWEIGHT HEADSETS | PH LIGHTWEIGHT SERIES

The RTS lightweight headsets provide users with an ideal combination of functionality and comfort. The PH-44 and PH-88 models offer users an efficient and durable standard headset while the MH models accommodate the needs of those who are looking for the added features of a premium headset.

PH-88

Single-sided Headset with
Flexible Dynamic Boom Mic

The PH-88 headset is a super light-weight, single-sided headset for the ultimate in daylong comfort. The PH-88 features high quality dynamic earphones with a dynamic-noise cancelling microphone with a semi-rigid, fully adjustable boom for pre-cise positioning. The high-quality wide band dynamic earphones offer a better fit, isolation and frequency response. Additional versions are available including 4- or 5-pin male or female XLR connectors.

PH-44

Dual-sided Headset with
Flexible Dynamic Boom Mic

The PH-44 headset is a super light-weight, dual-sided headset for the ultimate in daylong comfort. The PH-44 features high quality dynamic earphones with a dynamic noise-cancelling microphone with a semi-rigid, fully adjustable boom for precise positioning. The high-quality wide band dynamic ear-phones offer a better fit, isolation and frequency response. Additional versions are available including 4- or 5-pin male or female XLR con-nectors.

PREMIUM LIGHTWEIGHT HEADSETS | MH SERIES

MH-300

Single-sided Headset/Headphone

The MH-300 single-sided headset provides the newest design from RTS. It features a rugged, modular design, lightweight construction, installation options and multiple functions beyond the live studio or theater venue. The modular design allows you to interchange modules to allow for the best headset configuration for any environment. The noise-cancelling microphone, combined with the headphone transducers, provide clear and precise communication in noisy environments. Finally, by installing the appropriate module, you can connect to any audio device. Expanded frequency response ensures clear communications and enhanced audio performance.

MH-302

Dual-sided Headset/Headphone

The MH-302 is designed with you, the user, in mind. The headset features a durable modular design, lightweight construction, installation options and multi-functional use. The modular design allows you to interchange modules for any environment. The noise-cancelling microphone, combined with the headphone transducers, provide clear communication in noisy environments. Finally, this headset is not limited to live studio or venue communications. By installing the appropriate module, you can connect to an MP3 player or many other types of audio devices. The MH Series headsets provide clear communications for professional applications including live remote or studio broadcasting, film, TV or theater intercom communications. Expanded frequency response ensures clear communications and enhanced audio performance.

MEDIUM WEIGHT HEADSETS | PH SERIES

The PH Series of medium-weight intercom headsets is considered the industry standard by many users in all different applications. The PH Series features both durability and functionality. With weights between 11–13 oz, these headsets offers the ultimate in daylong comfort.

PH-1

Single-sided Headset with Flexible Dynamic Boom Mic

The PH-1 is a medium weight, single-sided headset with foam-filled cushions that offer a light feel with moderate isolation from ambient noise. The dynamic noise-cancelling microphone is easily positioned with a unique ball joint for continuous adjustability. Available with 4- or 5-pin male or female XLR connectors.

PH-2

Dual-sided Headset with Flexible Dynamic Boom Mic

The PH-2 headset is a medium weight, full cushion, dual-sided headset for the ultimate in daylong comfort. The headset has foam-filled cushions that offer a light feel with moderate isolation from ambient noise. The PH-2 features a high quality monaural dynamic earphone with a dynamic noise-cancelling microphone on an adjustable ball joint boom that can be positioned on either side of the head.

PH-3

Dual-sided Headset with Flexible Dynamic Boom Mic

The PH-3 is a medium weight, dual-sided stereo headset with foam-filled cushions that offer a light feel with moderate isolation from ambient noise. The dynamic noise-cancelling microphone is easily positioned with a unique ball joint for continuous adjustability.

MEDIUM WEIGHT HEADSETS | HR SERIES

The HR Series of medium-weight intercom headsets features a unique design that is both comfortable and functional. The HR Series provides users with a premium headset option loaded with features. The earcup and ergonomically designed headband provide added comfort through 3 unique pressure settings. This design also provides 21 dB of passive hearing protection. The cord comes terminated in either 4- or 5-pin XLR, male or female and can also be purchased unterminated for custom applications.

HR-1

Single-sided Headset with
Flexible Dynamic Boom Mic

The HR-1 is a single muff, medium-weight passive noise reduction headset with a dynamic noise-cancelling microphone. The ergonomic headband design distributes the ear cushion pressure evenly over the entire ear with no pressure points, ensuring hours of comfortable wear. An added advantage of this headset design is that it folds into compact form for ease of transport and storage. Additional versions are available including 4- or 5-pin male or female XLR connectors.

HR-2

Dual-sided Headset with
Flexible Dynamic Boom Mic

The HR-2 is a dual-sided, medium-weight passive noise reduction headset with a dynamic noise-cancelling microphone. The headset has a noise reduction rating of 21 dB; suitable for use in a moderately noisy environment. The HR-2 features our unique, soft padded headband for daylong comfort. Our ergonomic headset design distributes ear cushion pressure evenly over the entire ear with no pressure points, unlike conventional headsets. An added advantage of this headset design is that it folds into compact form for ease of transport and storage. Additional versions are available including 4- or 5-pin male or female XLR connectors.

MONITOR HEADPHONES | LISTEN-ONLY HEADPHONES

HR-1L & HR-2L

Medium-Weight, Listen-only
Headphones

The HR-1L & HR-2L are medium-weight, noise reduction headphones with a noise reduction rating of 21 dB. The HR-1L is a single-sided headset while the HR-2L is a dual-sided headset. The headsets effectively reduce noise and are suitable for use in moderately noisy environments. All models feature a unique, soft padded headband design that distributes ear cushion pressure evenly over the entire ear with no pressure points, unlike conventional designs which apply more pressure on the bottom of the ear than the top. An added advantage of this design is that the headset folds into an extremely compact shape.

UNDER HELMET

PH-16

Dual-sided Headset with 24 dB,
Flexible Dynamic Boom Mic

The PH-16 is a monaural headset with a noise-cancelling dynamic microphone. The PH-16 is designed to fit under a helmet with an environmental protection agency noise reduction rating (NRR) of 24 dB. The headset cord is terminated with a 4-pin XLR female connector. The dynamic receivers have special mounting which resist shock, vibration and acoustic feedback. The PH-16 ear cups are foam lined for added noise attenuation. The vented, foam-filled ear cushions combine comfort with good acoustic seal. For convenience and economy, the receivers and ear cushions are field repairable.

ACCESSORIES

HS-6A

Telephone-style PTT Handset
with Metal Hanger Bracket

The HS-6A is a telephone-style handset that offers a push-to-talk switch, dynamic earphone and dynamic microphone. It is supplied with a metal hanger bracket for vertical storage and is compatible with most user stations. The HS-6A is terminated with an A4F plug. Available in white or black.

Headsets Accessories

Model	Description
CC-1	Cover Cushion
C3	Ear Cushion, Black for PH-1, -2, -3
C-8	Ear Cushion for PH-44, -88
C-9	Ear Cushion for HR-1, -2
WS-2B	Windscreen for PH-44, -88
PT-400	PTT Kit Locking
AEF-3B	Nylon Earloop, Clear
ET-1B	Eartip, Clear
HE-15	Extension Cable
HE-30	Extension Cable

MH Headsets Accessories

Model	Description
MH-EC	MH ACC Ear Cushion
MH-WC	MH ACC Dyn Mic Windscreen
MH-HBP+	MH ACC Headband and Side Pads
MH-AAM	MH ACC Aux Audio Module
MH-FM	MH ACC Filler Module
MH-TP	MH ACC Temple Pad
MH-CC	MH ACC Carry Case
MH-DM-A4M	MH ACC Dyn Module – A4M
MH-DM-A4F	MH ACC Dyn Module – A4F
MH-DM-A5M	MH ACC Dyn Module – A5M
MH-DM-A5F	MH ACC Dyn Module – A5F

EARSETS

The popular RTS earsets are precisely designed for inconspicuous listening while on camera. Used by nearly all major television networks and stations, we have surpassed industry standards. The extremely efficient miniature driver element requires only nominal operating power and enables the announcer to hear program cues while working with a live microphone. The units are also suitable for many other applications such as live theater script prompting.

TYPICAL SET-UP

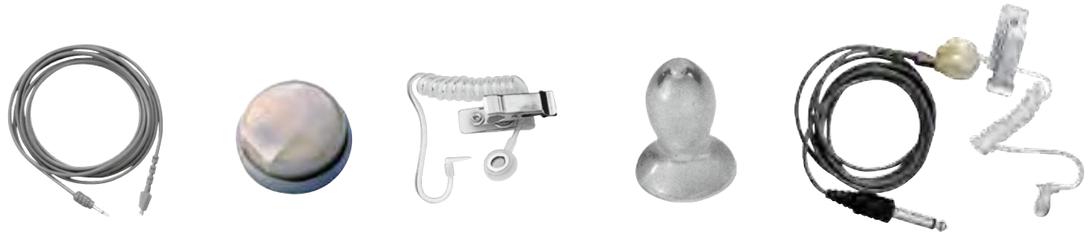

Cable + Receiver + Eartube + Earcone = Complete Set

To provide optimum versatility, the announcer's earset is made up of interchangeable components that simply snap together. Users can construct a version of the announcer's earset that best suits their particular needs. Some popular combinations are available as a standard configuration; these are listed below.

Complete Earsets

EMV-2 includes:
RTV-04, CMT-2, AEF-3B

CES-1 includes:
RTV-04, CMT-2, ET-4

CES-2 includes:
RTV-04, CMT-98, ET-4

Telethin Magnetic Receivers

RTR-04 15 Ω
RTV-04 125 Ω
RTW-04 500 Ω
RTX-04 1000 Ω
RTY-04 2000 Ω

Telethin Magnetic Receivers, available in 5 different impedances, permits choice of impedance for any application. For inconspicuous use, the receiver is extremely small and lightweight.

Standard Telethin® Cord Sets

The standard earset system comes equipped with a 5', low luster gray or beige cord with a 1/4" connector. A variety of other cords with or without volume controls are available as components.

CMT-95
Straight cord with sub-miniature straight connector

CMT-98
Straight cord with straight miniature connector

CMT-2
Straight cord with sub-miniature straight connector

CMT-92
Straight cord with right angle miniature connector

CCX-2
Coiled cord with right angle miniature connector

CCT-2
Coiled extended cord with 1/4" connector

Earmolds/Earcones/ Eartips

For maximum comfort and convenience, three pliable earmolds (S, M & L) are available for either the left or right ear. The Telethin receiver easily attaches into the earpiece directing sound into the ear canal and limiting ambient noise.

Earmolds

EML-1R Large, right ear
EML-2L Large, left ear

EMM-1R Medium, right ear
EMM-2L Medium, left ear

EMS-1R Small, right ear
EMS-2L Small, left ear

Eartips

ET-1B
Eartip, soft silicone tip, clear colored, with metal plug

Earcones

BT-4
Bag of 5 large earcones for use with ET-4

BT-3
Bag of 5 medium earcones for use with ET-4

BT-2
Bag of 5 small earcones for use with ET-4

BT-1
Bag of 25 replacement eartips, clear colored, for use with ET-1B

Eartubes

These inconspicuous clear plastic tubes carry the sound effectively from a RTS Telethin receiver to the talent's ear without revealing the cord to the camera. The clear tubes are available in 3 versions. All connect easily to a RTS eartip, earcone or any size earmold and have a handy clothing clip to secure the system in place.

ET2
Coiled acoustic eartube with clothing clip for use with earmolds or eartip

ET4
Coiled acoustic eartube with clothing clip for use with earcones — comes with one each — S, M & L earcones

ET3
Straight acoustic eartube with clothing clip for use with earmolds or eartip

Cords

The cords with in-line volume control are equipped with clothing clips for out of sight, waist-level positioning. To avoid loss of cues, the volume control will not shut off completely.

VXT-3
500 Ω volume control with 1/4" connector

VYT-3
2000 Ω volume control with 1/4" connector

Earloops

The nylon or plastic covered metal earloop holds the eartip or receiver in place on the ear.

AEF-3B
Nylon earloop

AEF-2
Plastic covered metal earloop

AFC-1 Under-chin tube and foam cushion

OB VAN

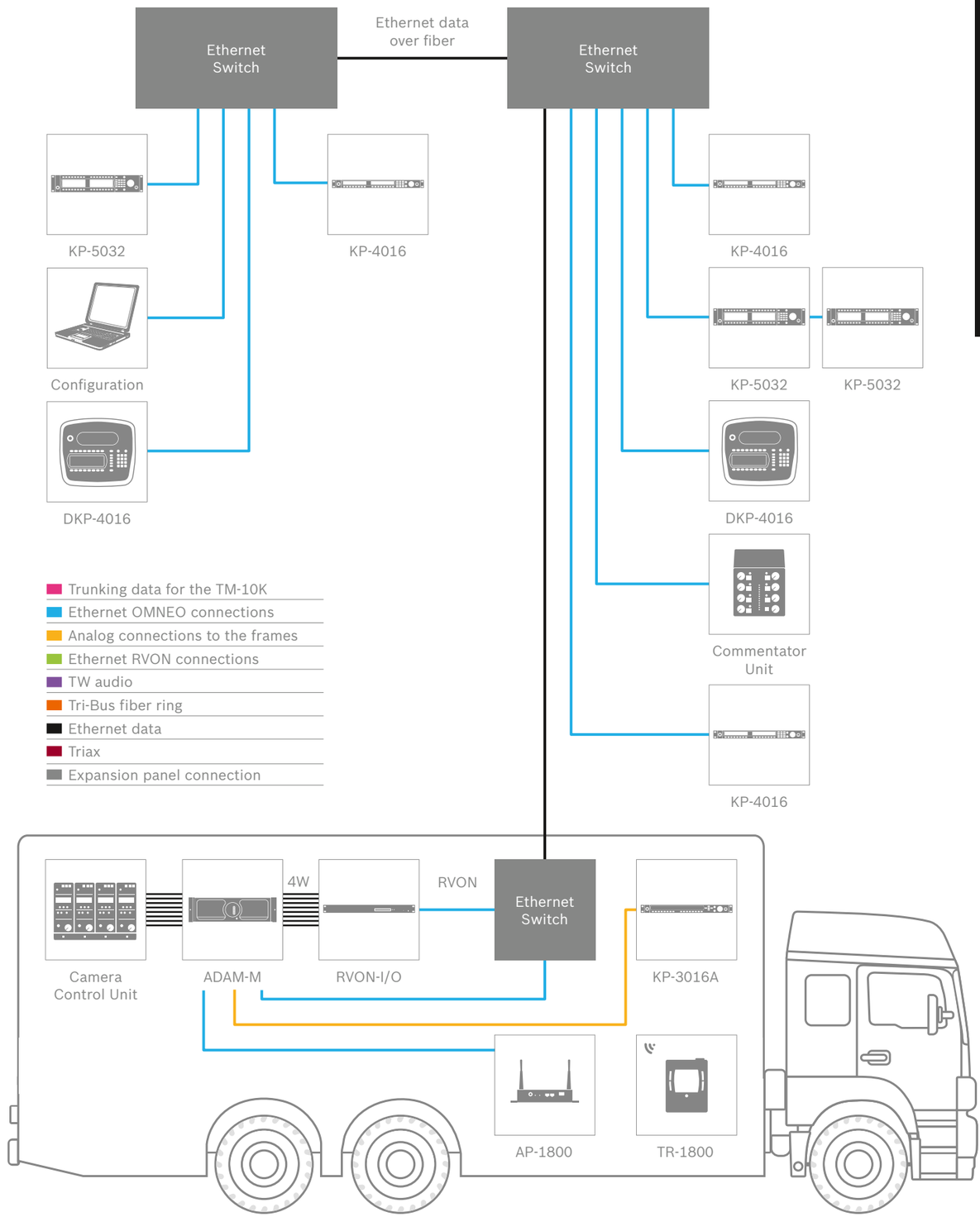

STUDIO

Vision Control

Slomotion
KP-3016

Vision Engineer
KP-3016

Director
KP-5032

Production Assistant
KP-5032

Script
KP-3016

Cut
KP-3016

Sound

EKP-4016

KP-5032

VTR
KP-4016

Vision Mixer
KP-5032

Graphics
KP-4016

Studio/Light
DKP-4016

LAN

Broad-casting Center

MCR
KP-5032

TM-10K

VLink Server

SIP Server

IFB

TR-1800

AP-1800

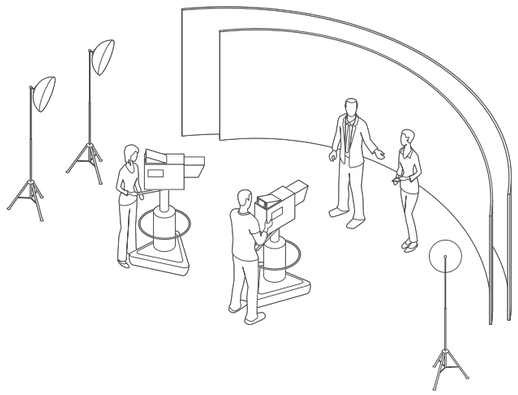

CAR

ADAM-M
incl. AIO-16A
and OMI cards

KP-5032

DSI-2008

PS-20

BP-4000

Camera
Control Unit

TIF 4000

BTR-80N

THEATRE

CAR
ADAM-M

Wardrobe
KP-4016

Flyperson
KP-4016

Machinery
DKP-4016

AP-1800

Stage Door
DKP-4016

Stage Crew
TR-1800

Stage Manager
KP-5032

EKP-4016

LAN

Orchestra
DKP-4016

Prompter
DKP-4016

Director
DKP-4016

Follow Spot
TR-1800

Follow Spot
TR-1800

Follow Spot
TR-1800

Follow Spot
TR-1800

Light
KP-4016

Sound Operator
KP-4016

Sound Designer
TR-1800

AP-1800

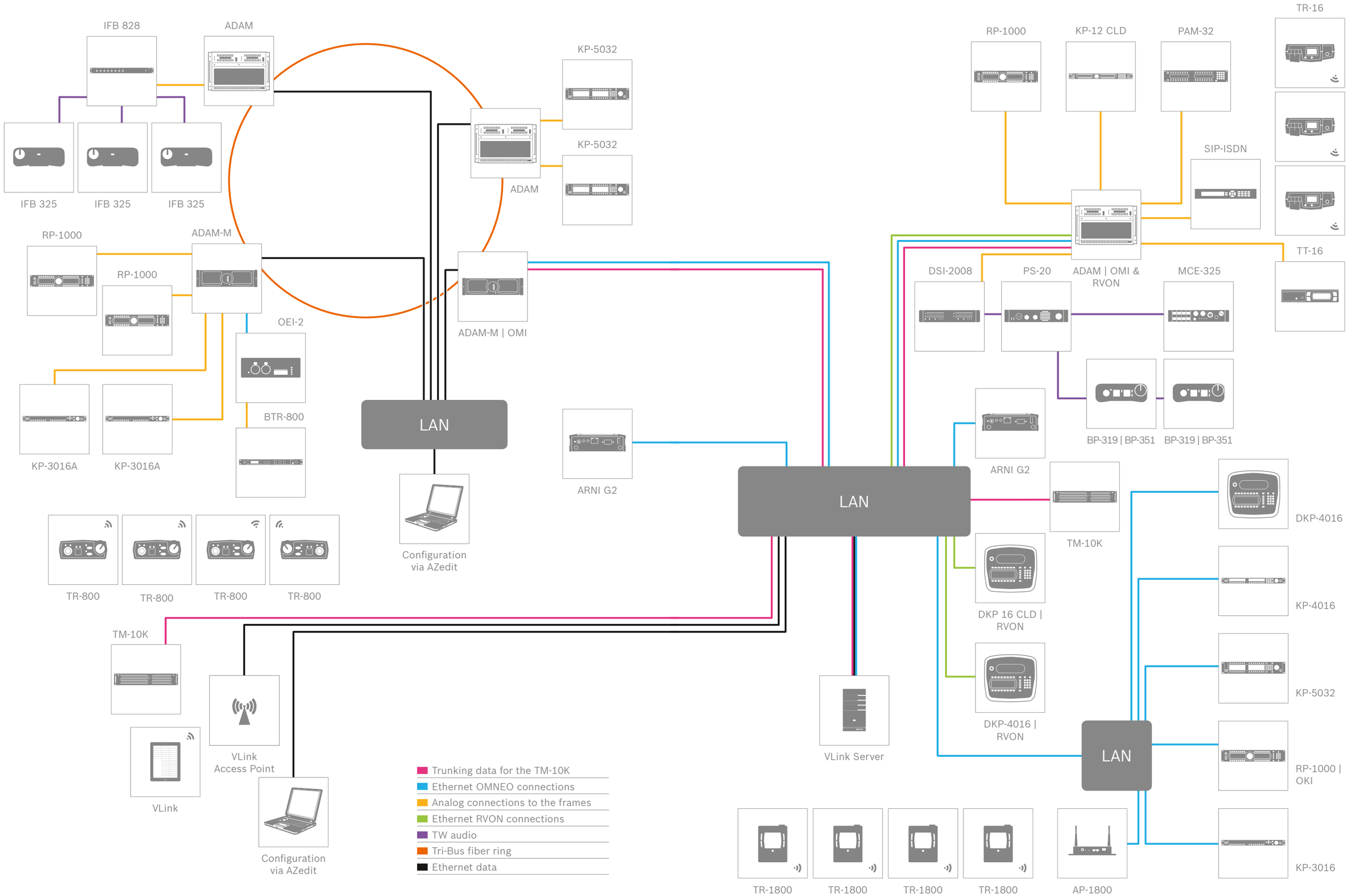
IFB 828
ADAM
IFB 325
IFB 325
IFB 325
KP-5032
KP-5032
ADAM
RP-1000
RP-1000
ADAM-M
OEI-2
ADAM-M | OMI
KP-3016A
KP-3016A
BTR-800
LAN
ARNI G2
Configuration via AZedit
TR-800
TR-800
TR-800
TR-800
TM-10K
VLink
VLink Access Point
Configuration via AZedit
RP-1000
KP-12 CLD
PAM-32
TR-16
SIP-ISDN
TT-16
DSI-2008
PS-20
ADAM | OMI & RVON
MCE-325
BP-319 | BP-351
BP-319 | BP-351
ARNI G2
LAN
TM-10K
DKP 16 CLD | RVON
DKP-4016 | RVON
VLink Server
DKP-4016
KP-4016
KP-5032
RP-1000 | OKI
KP-3016
LAN
TR-1800
TR-1800
TR-1800
TR-1800
AP-1800
Trunking data for the TM-10K
Ethernet OMNEO connections
Analog connections to the frames
Ethernet RVON connections
TW audio
Tri-Bus fiber ring
Ethernet data

PRODUCT SPECIFICATIONS

Wireless Intercom Products

Overall	BTR-80N	BTR-800	BTR-700	BTR-240
RF Frequency Range	482–722 MHz (TV 16 to TV 36 and TV 38 to TV 52)	470–608 MHz, 614–722 MHz in 18 MHz TX and RX bands	470–608 MHz, 614–722 MHz in 18 MHz TX and RX bands	North America: 2.412 to 2.462 GHz Europe: 2.412 to 2.472 GHz
Power Requirement	(AC and DC) 100–240 VAC, 50–60 Hz, 12–15 Volts DC	100-240 VAC, 50–60 Hz, IEC receptacle	100-240 VAC, 50–60 Hz, IEC receptacle	12–15 VDC, 1.5 Amps
Product Dimensions (W x H x D)	19.0″x 1.72″x 14.0″ (48.3 x 4.4 x 35.6 cm)	19.0″x 1.72″x 14.0″ (48.3 x 4.4 x 35.6 cm)	19.0″x 1.72″x 14.0″ (48.3 x 4.4 x 35.6 cm)	1RU, 7.5″L x 19″W x 1.75″H (19.1 x 48.3 x 4.5 cm)
Product Weight	7.28 lb (3.3 kg)	7.14 lb (3.24 kg)/ 6.97 lb (3.16 kg)	7.14 lb (3.24 kg)/ 6.97 lb (3.16 kg)	3.48 lb (1.58 kg)
Shipping Dimensions (W x H x D)	22.0″x 5.0″x 16.5″ (55.9 x 12.7 x 41.9 cm)	17.0″x 5.0″x 23.0″ (43.2 x 12.7 x 58.4 cm)	17.0″x 5.0″x 23.0″ (43.2 x 12.7 x 58.4 cm)	23.6″x 13.3″x 5.53″ (59.9 x 33.8 x 14.0 cm)
Shipping Weight	11 lb (4.9 kg)	11.68 lb (5.3 kg)/ 10.58 lb (4.8 kg)	11.68 lb (5.3 kg)/ 10.58 lb (4.8 kg)	7.7 lb (3.5 kg)
FCC ID	B5DM528	B5DM514/ B5DM516	B5DM514/ B5DM516	B5DM532
EC Declaration of Conformity: Eligible to bear CE mark	BTR-80N	BTR-700 BTR-800	BTR-700 BTR-800	BTR-240
Frequency response	300 Hz – 5 kHz	300 Hz – 8 kHz	300 Hz – 8 kHz	350 Hz – 3 kHz
Four Wire Input	Level adjustable (2 Vrms typical)	Level adjustable (2 Vrms typical)	Level adjustable (2 Vrms typical)	Level adjustable (2 Vrms typical)
Four Wire Output	Level adjustable (2 Vrms typical)	Level adjustable (2 Vrms typical)	Level adjustable (2 Vrms typical)	Level adjustable (2 Vrms typical)
Audiocom Intercom	Level adjustable (1 Vrms typical) Line impedance 300 Ω	Input/output level adjustable (1 Vrms typical) Line impedance 300 Ω	Input/output level adjustable (1 Vrms typical) Line impedance 300 Ω	Level adjustable (0.775 Vrms typical)
RTS Intercom	Level adjustable (0.775 Vrms typical) Line impedance 200 Ω	Input/output level adjustable (0.775 Vrms typical) Line impedance 200 Ω	Input/output level adjustable (0.775 Vrms typical) Line impedance 200 Ω	Level adjustable (1 Vrms typical)
Clear-Com Intercom	Level adjustable (1 Vrms typical) Line impedance 200 Ω	Input/output level adjustable (1 Vrms typical) Line impedance 200 Ω	Input/output level adjustable (1 Vrms typical) Line impedance 200 Ω	Level adjustable (1 Vrms typical)
Auxiliary Input	Adjustable (2 Vrms typical)	Adjustable (2 Vrms typical)	Adjustable (2 Vrms typical)	Level adjustable (2 Vrms typical)
Auxiliary Output	Adjustable (2 Vrms into 600 Ω)	Adjustable (2 Vrms typical into 600 Ω (at rated deviation)	Adjustable (2 Vrms typical into 600 Ω (at rated deviation)	Level adjustable (2 Vrms typical into 600 Ω)
Stage Announce Output	Adjustable (2 Vrms typical at rated deviation into 600 Ω)	Internally adjustable (1 Vrms typical at rated deviation into 100 K Ω / N/A	Internally adjustable (1 Vrms typical at rated deviation into 100 K Ω / N/A	N/A
Stage Announce Relay	Dry contact, rated at 1 Amp, 24 V Max	Dry contact, rated at 1 Amp, 24 V Max	Dry contact, rated at 1 Amp, 24 V Max	N/A
Transmitter				
Type	Two synthesized transmitters, 712 channels each	Synthesized, 720 channels	Synthesized, 720 channels	802.11b, up to 13 channels depending on location
Transmit Power	249 mW – 10 mW	100 mW Max (High), 10 mW (Normal)/50 mW Max (High) 5 mW (Normal)	100 mW Max (High), 10 mW (Normal)/50 mW Max (High) 5 mW (Normal)	North America: 200 mW Europe: 70 mW
Microphone Audio Input	30–3500 Ω	30–3500 Ω	30–3500 Ω	30–3500 Ω
Receiver				
Type	Triple conversion superheterodyne, four independent IF's, 712 channels each	Dual conversion superheterodyne, synthesized, FM, 720 channels	Dual conversion superheterodyne, synthesized, FM, 720 channels	802.11b, up to 13 channels depending on location
RF Sensitivity	<0.8 µV for 12 dB SINAD	<0.8 µV for 12 dB SINAD	<0.8 µV for 12 dB SINAD	N/A
IF Selectivity	3 dB at 230 kHz	3 dB at 230 kHz	3 dB at 230 kHz	N/A
Squelch Quieting	90 dB	95 dB	95 dB	N/A
Distortion	1% at full deviation	<1% at full deviation	<1% at full deviation	N/A
Local Headset Output	40 mW output into 600 Ω	40 mW output into 600 Ω (1% Distortion)	40 mW output into 600 Ω (1% Distortion)	100 mWrms into 300 Ω

Wireless Partyline Products

Overall	TR-80N/TR-82N	TR-825/TR-800	TR-700	TR-240
RF Frequency Range	482–722 MHz (TV 16 to TV 36 and TV 38 to TV 52)	470–608 MHz, 614–722 MHz in 18 MHz TX and RX bands	470–608 MHz, 614–722 MHz in 18 MHz TX and RX bands	North America: 2.412 to 2.462 GHz Europe: 2.412 to 2.472 GHz
Power Requirement	6 AA cells, alkaline (NiMH optional)	6 AA cells, alkaline (NiMH optional)	6 AA cells, alkaline (NiMH optional)	Lithium Ion Rechargable Battery, 7.5 VDC
Typical Battery Life Alkaline	14 hours (continuous duty)/ 11 hours (continuous duty)	11 hours (continuous duty)/ 14 hours (continuous duty)/ 14 hours (continuous duty)	11 hours (continuous duty)/ 14 hours (continuous duty)/ 14 hours (continuous duty)	N/A
Typical Battery Life Nickel Metal Hydride (1500 mAh)	14 hours (continuous duty)/ 11 hours (continuous duty)	11 hours (continuous duty)/ 14 hours (continuous duty)/ 14 hours (continuous duty)	11 hours (continuous duty)/ 14 hours (continuous duty)/ 14 hours (continuous duty)	N/A
Product Dimensions (W x H x D)	3.75″x 5.05″x 1.65″ (9.5 x 12.8 x 4.2 cm)/ 3.75″x 5.35″x 2.02″ (9.5 x 13.5 x 5.1 cm)	3.75″x 5.35″x 2.02″ (9.5 x 13.5 x 5.1 cm)/ 3.75″x 5.05″x 1.65″ (9.5 x 12.8 x 4.2 cm)/ 3.75″x 5.05″x 1.65″ (9.5 x 12.8 x 4.2 cm)	3.75″x 5.35″x 2.02″ (9.5 x 13.5 x 5.1 cm)/ 3.75″x 5.05″x 1.65″ (9.5 x 12.8 x 4.2 cm)/ 3.75″x 5.05″x 1.65″ (9.5 x 12.8 x 4.2 cm)	1.75″L x 3.75″W x 5.25″H (4.5 x 9.5 x 13.3 cm)
Product Weight	1.81 lb (0.82 kg)/ 1.94 lb (0.88 kg)	21 oz (0.60 kg) with alkaline batteries/ 15 oz (0.43 kg) with alkaline batteries/ 16 oz (0.45 kg) with alkaline batteries	21 oz (0.60 kg) with alkaline batteries/ 15 oz (0.43 kg) with alkaline batteries/ 16 oz (0.45 kg) with alkaline batteries	12.9 oz (0.37 kg)
Shipping Dimensions (W x H x D)	13.75″x 3.75″x 6.5″ (34.9 x 9.5 x 16.5 cm)	7.0″x 4.0″x 14.0″ (17.8 x 10.2 x 35.6 cm)	7.0″x 4.0″x 14.0″ (17.8 x 10.2 x 35.6 cm)	7.0″x 4.0″x 14.0″ (17.8 x 10.2 x 35.6 cm)
Shipping Weight	3.31 lb (1.5 kg)/ 3.52 lb (1.6 kg)	1.37 lb (0.62 kg)/ 1.32 lb (0.60 kg)/ 1.26 lb (0.57 kg)	1.37 lb (0.62 kg)/ 1.32 lb (0.60 kg)/ 1.26 lb (0.57 kg)	1.37 lb (0.62 kg)
FCC ID	B5DM530/ B5DM531	B5DM517/ B5DM515/ B5DM515	B5DM517/ B5DM515/ B5DM515	None Required
EC Declaration of Conformity: Eligible to bear CE mark	TR-80N TR-82N	TR-700 TR-800 TR-825	TR-700 TR-800 TR-825	TR-240
Transmitter				
Type	Two synthesized transmitters, 712 Channels Each	Synthesized, 720 channels	Synthesized, 720 channels	
Transmit Power	100 mW – 5 mW	50 mW Max (Auto-power reduction when close to base)	50 mW Max (Auto-power reduction when close to base)	50 mW
Microphone Audio Input	30–3500 Ω	30–3500 Ω	30–3500 Ω	30–3500 Ω
Receiver				
Type	Triple conversion superheterodyne, four independent IF's, 712 channels each	Two, dual conversion superheterodyne, synthesized, FM, 720 channels/ dual conversion superheterodyne, synthesized, FM, 720 channels/ dual conversion superheterodyne, synthesized, FM, 720 channels	Two, dual conversion superheterodyne, synthesized, FM, 720 channels/ dual conversion superheterodyne, synthesized, FM, 720 channels/ dual conversion superheterodyne, synthesized, FM, 720 channels	802.11 B, up to 13 channels depending on location
RF Sensitivity	<0.8 µV for 12 dB SINAD	<0.8 µV for 12 dB SINAD/ <0.7 µV for 12 dB SINAD/ <0.7 µV for 12 dB SINAD	<0.8 µV for 12 dB SINAD/ <0.7 µV for 12 dB SINAD/ <0.7 µV for 12 dB SINAD	N/A
IF Selectivity	3 dB at 230 kHz	3 dB at 230 kHz	3 dB at 230 kHz	N/A
Squelch Quieting	90 dB	95 dB	95 dB	N/A
Distortion	1% at full deviation	<1% at peak level	<1% at peak level	N/A
Local Headset Output	40 mW output into 600 Ω	40 mW output into 600 Ω (1% Distortion)	40 mW output into 600 Ω (1% Distortion)	70 mWrms into 300 Ω

Licensing of this equipment is the User's responsibility and ability to license depends on the User's classification, User's application and frequency selected.

Wireless Partyline Products

Overall	TR-1800 (EU)	TR-1800 (NA)	AP-1800 (EU)	AP-1800 (NA)
Function	Beltpack (BP)		Access Point (AP)	
RF Frequency Range MHz	1880 – 1900	1920-1930	1880 – 1900	1920 – 1930
RF Standard	DECT			
RF range, typical	50 – 75 m indoor, 150 – 200 m outdoor			
Voice Codecs	G.722 (wideband) / G.726 (narrowband)			
Voice latency (ms)	Approx 40 ms BP to BP; 30 ms BP to matrix and matrix to BP			
Product Dimensions mm (W x H x D)	102 x 124 x (42 w/o clip, 59 w. clip)		195 x 138 x 39	
Product Weight kg	0.349 w. clip & batt.		0.442 w. antennas	
Shipping Dimensions mm (W x H x D)	244 x 99 x 144		287 x 99 x 194	
Shipping Weight	0.68 kg (1.50 lbs)		0.86 kg (1.90 lbs)	
IP-rating	IP-52		Indoor only	
Frequency Response	300 – 7000 Hz (G.722), 300 – 3500 Hz (G.726)			

Beltpack TR-1800	
Roaming	Full, automatic
Max BPs / AP	5 (G.722), 10 (G.726)
Max BPs / system	40
Headset	5-pin female XLR
Battery	7.4 V
Battery time	17 hours
Keys for talk/listen	4x2 + reply & clear
User interface	Icons plus text
Languages	10
Menu keys	4
Screen	320x240 pixel color LCD
Call Waiting Window	monochrome
Antenna arrangement	Dual, internal

Access Point AP-1800	
Audio, AP to matrix	OMNEO
Max APs / system	10
Typical power, W	6,5
Antenna type	Detachable, adjustable
Characteristics	3dBi gain, omni-directional
Mounting	Surface or pole (w clamp)
Voltage	12 V DC, external

19" Rackmount Products

Product	Height	Depth	Weight	Color
4010	1RU	15" (38.1 cm)	10.74 lb (4.87 kg)	Grey
4012	3RU	5.06" (12.86 cm)	3.72 lb (1.69 kg)	Silver
ADAM	7RU	21" (53.34 cm)	48 lb (21.77 kg)	Grey
ADAM-M	3RU	21" (53.34 cm)	22.05 lb (10.00 kg)	Duotone
BOP-220	3RU	5" (12.7 cm)	2.43 lb (1.1 kg)	Silver
Cronus	2RU	13.25" (33.66 cm)	14.15 lb (6.41 kg)	Grey
CSI-200	1RU	8.25" (20.96 cm)	2.2 lb (1 kg)	Grey
DSI-2008	1RU	8.25" (20.96 cm)	2.9 lb (1.32 kg)	Grey
EKP-3016	1RU	3.25" (9.85 cm)	3.00 lb (1.36 kg)	Duotone
EKP-4016	1RU	3.25" (9.85 cm)	2.95 lb (1.34 kg)	Duotone
EKP-4016 PB	1RU	3.25" (9.85 cm)	2.97 lb (1.35 kg)	Duotone
FMI-4	1RU	7.87" (20.0 cm)	5.9 lb (2.7 kg)	Duotone
FMI-8	1RU	7.87" (20.0 cm)	5.9 lb (2.7 kg)	Duotone
GPIO-16	1RU	7" (17.78 cm)	5.48 lb (2.49 kg)	Grey
ICP-2000	1RU	0.75" (1.91 cm)	0.89 lb (0.4 kg)	Black
IFB-828	1RU	7" (17.78 cm)	8.84 lb (4.01 kg)	Grey
KP 12 CLD	1RU	4.28" (10.87 cm)	3.76 lb (1.71 kg)	Duotone
KP-3016	1RU	3.25" (9.85 cm)	3.35 lb (1.52 kg)	Duotone
KP-3016A	1RU	3.25" (9.85 cm)	3.35 lb (1.52 kg)	Duotone
KP-5032	2RU	3.25" (9.85 cm)	4.89 lb (2.22 kg)	Duotone
KP-5032 PB	2RU	3.25" (9.85 cm)	4.85 lb (2.20 kg)	Duotone
KP-4016	1RU	3.25" (9.85 cm)	3.5 lb (1.58 kg)	Duotone
KP-4016 PB	1RU	3.25" (9.85 cm)	3.46 lb (1.57 kg)	Duotone
LMS-325	1RU	8" (20.32 cm)	2.76 lb (1.25 kg)	Grey
MCE-325	1RU	8" (20.32 cm)	4.5 lb (2.04 kg)	Grey
LCP-102	2RU	7.13" (18.1 cm)	8.28 lb (3.76 kg)	Black or Grey
MCS-325	1RU	8.25" (21 cm)	2.52 lb (1.14 kg)	Grey
MDA-100	1RU	8.5" (21.59 cm)	7.38 lb (3.35 kg)	Grey
MRT-327	1RU	9" (22.86 cm)	2.75 lb (1.25 kg)	Grey
PAP-32	2RU	4.5" (11.43 cm)	5.58 lb (2.53 kg)	Black or Grey
PS-20	1RU	8.56" (21.75 cm)	5 lb (2.27 kg)	Grey
RM-325	1RU	8" (20.32 cm)	2.75 lb (1.25 kg)	Grey
RP-1932	2RU	3.25" (8.26 cm)	6.3 lb (2.86 kg)	Duotone
RVON-I/O	1RU	8" (20.32 cm)	3.7 lb (1.67 kg)	Grey
SAP-1626	2RU	9.8" (24.89 cm)	10 lb (4.54 kg)	Grey
SAP-612	1RU	8" (20.32 cm)	4.52 lb (2.05 kg)	Grey
SIP-ISDN	1RU	8.5" (21.59 cm)	3 lb (1.36 kg)	Duotone
SSA-324*	1RU	8.25" (20.96 cm)	2.7 lb (1.22 kg)	Grey
SWP-2000	1RU	5.75" (14.61 cm)	4.6 lb (2.09 kg)	Black
TIF-2000A	1RU	8.25" (20.96 cm)	2.25 lb (1.13 kg)	Grey
TIF-4000	4RU	13" (33.02 cm)	28.45 lb (12.9 kg)	Grey
TM-10K	2RU	12" (30.48 cm)	26.78 lb (12.15 kg)	Black
Zeus III	1RU	15" (38.1 cm)	7 lb (3.18 kg)	Duotone
Zeus III LE/LE+	1RU	15" (38.1 cm)	7 lb (3.18 kg)	Duotone

*SSA-324 is only available in the 110V version

Non-Rackmount Products

Product	Form Factor	Height	Width	Depth	Weight	Color
4030	Beltpack	1.5" (3.8 cm)	3.75" (9.53 cm)	1.8" (4.57 cm)	0.67 lb (0.3 kg)	Grey
ARNI G2	Other*	1.7" (4.31 cm)	5.27" (13.38 cm)	3.71" (9.42 cm)	1.30 lb (0.45 kg)	Silver
BP-319	Beltpack	5" (12.7 cm)	3.5" (8.89 cm)	1.8" (4.57 cm)	0.75 lb (0.34 kg)	Black or Grey
BP-325	Beltpack	5" (12.7 cm)	3.75" (9.53 cm)	2.05" (5.21 cm)	0.5 lb (0.23 kg)	Black or Grey
BP-351	Beltpack	5" (12.7 cm)	3.5" (8.89 cm)	1.8" (4.57 cm)	0.75 lb (0.34 kg)	Black or Grey
BP-4000	Beltpack	5" (12.7 cm)	3.75" (9.5 cm)	1.6" (4.0 cm)	0.75 lb (0.34 kg)	Black
BP-5000	Beltpack	5" (12.7 cm)	3.75" (9.5 cm)	1.6" (4.0 cm)	0.75 lb (0.34 kg)	Black
CIA-1000 Front	Rackmount or Desktop	1RU	8.19" (20.8 cm)	5.56" (14.13 cm)	0.94 lb (0.43 kg)	Grey
CIA-1000 Top	Desktop	2" (5.08 cm)	8.19" (20.8 cm)	5.25" (13.34 cm)	0.94 lb (0.43 kg)	Grey
CM-300L	Console Mount	2.75" (6.99 cm)	6.25" (15.88 cm)	6.4" (16.26 cm)	1.2 lb (0.54 kg)	Grey
DKP 16 CLD	Desktop	3.2" (8.13 cm)	10.1" (25.65 cm)	9.2" (23.37 cm)	3.78 lb (1.71 kg)	Duotone
DKP-4016	Desktop	3.60" (9.15 cm)	10.63" (27.01 cm)	9.35" (23.76 cm)	3.70 lb (1.68 kg)	Duotone
DKP-4016W	Wallmount	3.60" (9.15 cm)	10.63" (27.01 cm)	9.35" (23.76 cm)	3.70 lb (1.68 kg)	Duotone
DKP-3016	Desktop	3.60" (9.15 cm)	10.63" (27.01 cm)	9.35" (23.76 cm)	3.59 lb (1.63 kg)	Duotone
DKP-3016W	Wallmount	3.60" (9.15 cm)	10.63" (27.01 cm)	9.35" (23.76 cm)	3.59 lb (1.63 kg)	Duotone
IFB-325	Beltpack	1.5" (3.8 cm)	3.75" (9.53 cm)	1" (2.54 cm)	1 lb (0.45 kg)	Grey
SPK-300L	Desktop	4" (10.16 cm)	8" (20.32 cm)	8" (20.32 cm)	3.5 lb (1.59 kg)	Grey
WM-300L	Wallmount	4.5" (11.43 cm)	4.5" (11.43 cm)	1.81" (4.6 cm)	0.56 lb (0.25 kg)	Grey
WMS-300L	Wallmount	4.5" (11.43 cm)	8" (20.32 cm)	1.75" (4.45 cm)	1 lb (0.45 kg)	Grey

*separate shelf available for rackmount application

Software Products

Product	Function
Control Software Package	Advanced control & configuration functions for KP-Series keypanels[1]
Audio Software Package	Voice messaging and enhanced audio features for KP-Series keypanels[1]
RVON Codec for KP-Series	RTS Voice Over Network (RVON) for KP-Series keypanels[2]
SIP-Server	SIP telephony interface for ADAM & ADAM-M matrices[3]
Optocore Control Software	Control Software Package for FMI-4 and FMI-8
AZedit	RTS Matrix Control Software
IPedit	Configuration Software for RVON & OMNEO Devices
RestrictEdit	Access Management Software
Trunk Edit Software	GUI for programming TM-10K trunking devices
Trunk Supervisor Software	Trunking System Management Application

[1] Cannot be installed on the KP-3016 or KP-3016A

[2] Cannot be installed on KP-3016A

[3] Requires a server, contact your local sales representative

Headsets

Product	Type	Microphone sensitivity (re: 1V/Pa @ 1KHz)	Microphone frequency response	Microphone impedance	Speaker sensitivty	Speaker frequency repsonse	Speaker impedance	Connector Termination	Cord length	Weight (not including cord)
LH-300-DM	Single Side, Dynamic Microphone	-63 dB	200Hz – 6.5KHz	200Ω	99 dB	200 Hz - 10KHz	300Ω	Available in 4 or 5 pin Male XLR, 4 pin Female XLR or stripped wire	6ft (1.8M)	~2.6oz (74g)
LH-300-EM	Single Side, Electret Microphone	-41 dB	200Hz - 10KHz	2.2K	99 dB	200 Hz - 10KHz	300Ω	4 conductor 3.5mm plug	6ft (1.8M)	~2.6oz (74g)
LH-302-DM	Double Side, Dynamic Microphone	-63 dB	200Hz – 6.5KHz	200Ω	99 dB	200 Hz - 10KHz	150Ω (4 pin models), 300Ω (5 pin models)	Available in 4 or 5 pin Male XLR, 4 or 5 Female XLR or stripped wire	6ft (1.8M)	~3.4oz (96g)
LH-302-EM	Double Side, Electret Microphone	-41 dB	200Hz - 10KHz	2.2K	99 dB	200 Hz - 10KHz	300Ω	4 conductor 3.5mm plug	6ft (1.8M)	~3.4oz (96g)
LH-302-L	Double Side, Headphone	N/A	N/A	N/A	99 dB		150Ω	2 conductor 6.3mm plug	6ft (1.8M)	~2.9oz (82g)
PH-88	Single Side, Dynamic Microphone	-65 dB	200Hz – 6.5KHz	200Ω	109 dB	100 Hz - 7KHz	300Ω	Available in 4 or 5 pin Male XLR, 4 pin Female XLR, dual 3.5mm plug	5.5ft (1.7M)	~2.5oz (71g)
PH-88E	Double Side, Dynamic Microphone	-65 dB	200Hz – 6.5KHz	200Ω	109 dB	100 Hz - 7KHz	300Ω	4 pin Female XLR	2ft (.6M), 12ft (3.7M) extended	~2.5oz (71g)
PH-8S	Single Side, Dynamic Microphone	-65 dB	200Hz – 6.5KHz	200Ω	109 dB	100 Hz - 7KHz	300Ω	4 conductor 3.5mm plug	9ft (2.7M)	~2.5oz (71g)
PH-44	Double Side, Dynamic Microphone	-65 dB	200Hz – 6.5KHz	200Ω	109 dB	100 Hz - 7KHz	150Ω (4 pin models), 300Ω (5 pin models)	Available in 4, 5 or 6 pin Male XLR, 4 or 5 Female XLR, dual 3.5mm plug or stripped wire	5.5ft (1.7M)	~3oz (85g)
MH-300	Single Side, Dynamic Microphone	-65 dB	200Hz – 6.5KHz	200Ω	100 dB	100 Hz - 10KHz	150Ω (4 pin models), 300Ω (5 pin models)	Available in 4 or 5 pin Male XLR, 4 or 5 pin Female XLR	5.9ft (1.8M)	~8oz (227g)
MH-302	Double Side, Dynamic Microphone	-65 dB	200Hz – 6.5KHz	200Ω	100 dB	100 Hz - 10KHz	150Ω (4 pin models), 300Ω (5 pin models)	Available in 4 or 5 pin Male XLR, 4 or 5 pin Female XLR	5.9ft (1.8M)	~10oz (284g)
PH-1	Single Side, Dynamic Microphone	-65 dB	200Hz – 6KHz	200Ω	95 dB	100 Hz - 10Khz	300Ω	Available in 4 or 5 pin Male XLR, 4 pin Female XLR or stripped wire	5.5ft (1.7M)	~11oz (312g)
PH-2	Double Side, Dynamic Microphone	-65 dB	200Hz – 6KHz	200Ω	95 dB	100 Hz - 10Khz	150Ω	Available in 4 pin Male XLR, 4 pin Female XLR or stripped wire	5.5ft (1.7M)	~13oz (366g)
PH-3	Double Side, Stero, Dynamic Microphone	-65 dB	200Hz – 6KHz	200Ω	95 dB	100 Hz - 10Khz	300Ω per side	Available in 4 or 5 pin Male XLR	5.5ft (1.7M)	~13oz (366g)
HR-1	Single Side, Dynamic Microphone	-65 dB	150Hz - 8KHz	200Ω	95 dB	100Hz - 3KHz	300Ω	Available in 4 or 5 pin Male XLR, 4 pin Female XLR or stripped wire	5ft (1.5M)	~11oz (312g)
HR-1L	Single Side, Headphone	N/A	N/A	N/A	95 dB	100Hz - 3KHz	300Ω	Stripped wire (no connector)	5ft (1.5M)	~11oz (312g)
HR-2	Double Side, Dynamic Microphone	-65 dB	150Hz - 8KHz	200Ω	95 dB	100Hz - 3KHz	150Ω (4 pin models), 300Ω (5 pin models)	Available in 4 or 5 pin Male XLR, 4 or 5 Female XLR or stripped wire	5ft (1.5M)	~15oz (425g)
HR-2L	Double Side, Headphone	N/A	N/A	N/A	95 dB	100Hz - 3KHz	300Ω per side	Stripped wire (no connector)	5ft (1.5M)	~15oz (425g)
PH16	Double Side, Dynamic Microphone	-65 dB	200Hz - 6KHz	200Ω	93 dB	100Hz - 3KHz	150Ω	Available in 4 pin Male or Female XLR	5.5ft (1.7M)	~15oz (425g)

HEADQUARTER ADDRESSES

NORTH AMERICA GLOBAL HQ
Bosch Security Systems, Inc.
Burnsville, MN
Phone: +1 952 884 4051

LATIN AMERICA REGIONAL HQ
Robert Bosch Limitada
Security Systems
Campinas, SP, Brasil
Phone: +55 19 2103-4282
RTS.Intercom.LA@br.bosch.com

EUROPE REGIONAL HQ
Bosch Sicherheitssysteme GmbH
(EVI Audio GmbH)
Straubing, Germany
Phone: +49 9421 706-0
info@rtsintercoms.com

ASIA-PACIFIC REGIONAL HQ
Robert Bosch (SEA) Pte Ltd
Singapore
Phone: +65 6571 2808

CHINA REGIONAL HQ
Bosch (Shanghai)
Security Systems Ltd.
IBP, Changning District
Shanghai, P.R.China
Phone: +86 400 8310 669
rts@cn.bosch.com

For information on any of the products featured in this catalog, you can reach us at **info@rtsintercoms.com**
Please visit the RTS website at: **www.rtsintercoms.com**

@rtsintercoms @rtsintercomsystems @rtsintercoms @rtsintercoms

© Bosch Security Systems, Inc.
Information in this document is subject to change without notice.
All trademarks are the copyrights of their respective owners.

Printed in Germany (F&W) · 09/2017