3405FRS-BNC

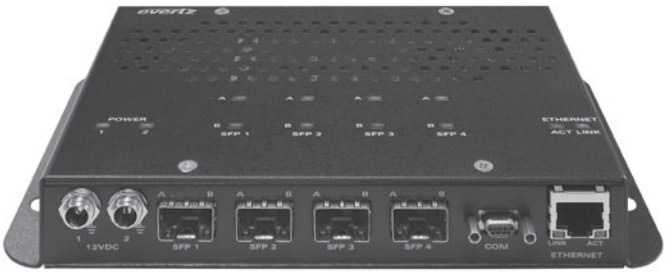

Evertz 3405SFP Options

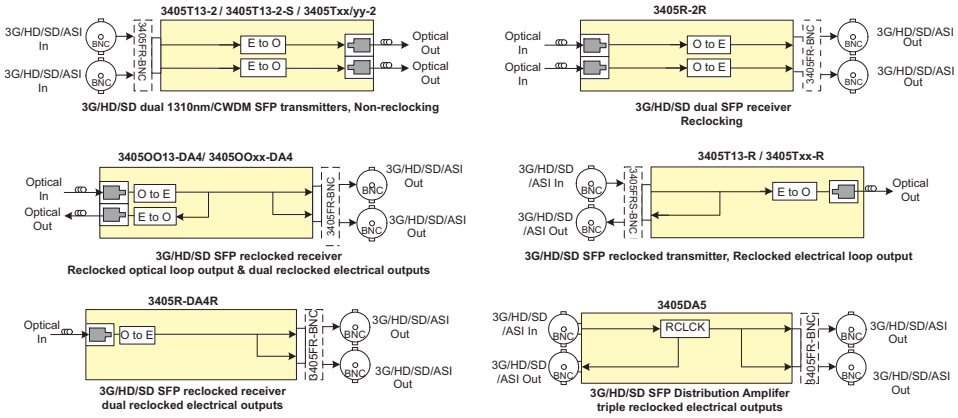

The Evertz® 3405FRS-BNC SFP frame is the ideal solution for today's low cost, high density fiber optic distribution needs. The 3405FRS-BNC provides the flexibility to handle the high-speed requirements of 3G and HDTV as well as SD-SDI, SDTi, and DVB-ASI.

The 3405FRS-BNC is designed on a standalone frame to house up to 4 hot swappable Evertz® SFP modules. This provides up to 8 EO or 8 OE in a standalone frame. The frame can be configured for a mixture of modules. See SFP options above.

The on board frame controller provides VistaLINK® capabilties for SNMP control and monitoring.

The 3405FRS-BNC frame comes with a primary external power supply module. SFP's and redundant power supply must be ordered separately. Please see ordering information.

Features & Benefits

- Dual Power supplies (primary and redundant)
- Houses up to 4 front loading Evertz® SFP modules
- Each slot can be used as an input or output based on SFP type
- On board Frame Controller for full VistaLINK® SNMP control and monitoring
- No electrical re-cabling required when hot swapping SFP modules

The Complete Solution Provider
evertz

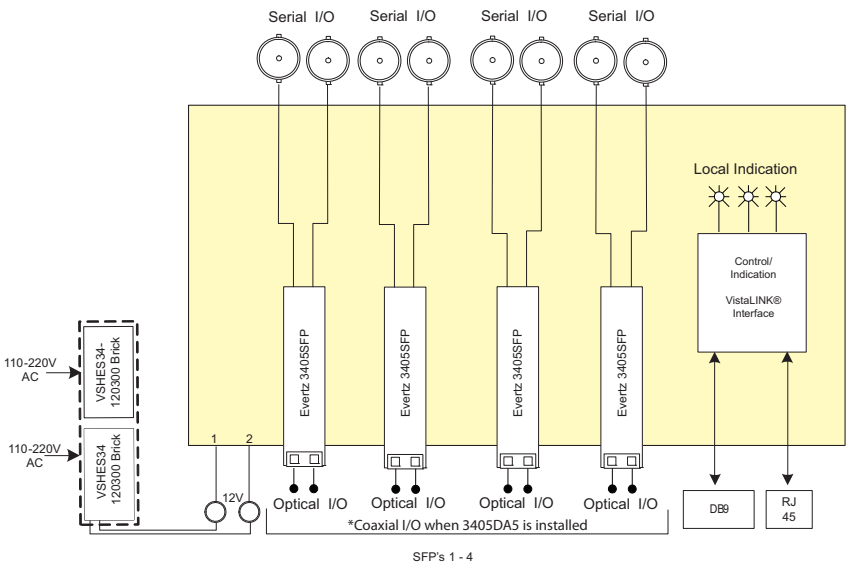

Specifications

System:

Density:	Up to 8 EO, OE, or mixture of EO and OE in a miniature frame
Impedance:	75Ω
Connector:	BNC per IEC 61169-8 Annex A

Communication and Control:

Serial:	RS-232 - single Female mini 9-pin connector
Ethernet:	SNMP over IEEE 802.3/U (10/100 BaseTx) RJ45 connector
Control:	VistaLINK® / SNMP

Optical Output:

Number of Outputs:	Up to 2 per SFP
Connector:	LC/UPC
Rise/Fall Time:	<270ps
Optical Power:	
Standard:	-2dBm ±1dBm
CWDM:	+3.5dBm ±1dBm
Wavelength:	
Standard:	1310nm
CWDM:	1270nm-1610nm
	ITU-T G.694.2 compliant

Optical Input:

Number of Inputs:	Up to 2 per SFP
Connector:	LC/UPC
Operating Wavelength:	
	1270nm to 1610nm
Maximum Input Power:	
Standard:	-1dBm
Optical Sensitivity:	
Standard:	-21dBm at 2.97Gb/s pathological Level A -23dBm at 2.97Gb/s color bars

Electrical Inputs:

Standard:	SMPTE ST 424-1 (3 Gb/s), SMPTE ST 292-1 (1.5Gb/s), SMPTE ST 259-1 (270Mb/s), DVB-ASI
Connector::	BNC per IEC 61169-8 Annex A
Equalization:	Automatic to 80m @ 3 Gb/s 100m@ 1.5Gb/s 250m @ 270Mb/s (with Belden 1694A or equivalent)
Return Loss:	> 15dB up to 1.5GHz > 10dB up to 3GHz

Electrical Outputs:

Standard:	SMPTE ST 424-1 (3 Gb/s), ST 292-1 (1.5Gb/s), SMPTE ST 259-1 (270Mb/s), DVB-ASI
Connector:	BNC per IEC 61169-8 Annex A
Impedance:	75Ω (nominal)
Signal Level:	800mV (nominal)
DC Offset:	0V +/-0.5V
Rise and Fall Time:	< 135ps (HD/3G) < 900ps (SD)
Overshoot:	< 10% of amplitude
Return Loss:	>15dB to 1.5GHz >10dB to 3GHz
Alignment Jitter:	< 0.2UI (Reclocked) to 1.485Gb/s < 0.3UI (Reclocked) to 2.97Gb/s

VSHES34-120300 External Power Supply Brick:

AC Mains Input:	Auto ranging, 100 - 240 VAC, 50/60 Hz
Number of Outputs:	1
Output Voltage:	12VDC
Output Connector:	Coaxial power connector
Max Power Dissipation:	36W
Status Indicators:	Green OK LED

Physical:

Dimensions:	1.03"H x 7.08"W x 4.125"D
Module Capacity:	4 Evertz® SFP modules
Operating Temperature	0-40°C

Electrical:

Power Supply Configuration:	Dual external supplies (primary/secondary VSHES34-120300)
Voltage:	DC Input 12V DC (external power supplies required for 110-220V)
Max Power Consumption:	12W (fully loaded frame with all accessories) Note - power consumption dependent on SFP type

Ordering Information

Notes	Multimode applications require a 5dB optical attenuator at the output of all transmitting ports, **except** when "-S" short haul version transmitter SFP's are used
3405FRS-BNC	Standalone Fiber Optic SFP BNC frame (includes primary power supply), SFP's and redundant power supply ordered separately

Power Supplies:

VSHES34-120300	Redundant power supply brick

Accessories:

J/LC/LC/ATTEN-5DB
5dB optical attenuator. Required for multimode applications when non-short-haul transmitters are used

Evertz SFP Modules:

3405T13-2	3G/HD/SD dual 1310nm SFP transmitters. Non-reclocking
3405T13-2-S	3G/HD/SD dual 1310nm SFP transmitters. Non-reclocking (low optical power for short haul, intrafacility, and multimode applications)
3405DA5	3G/HD/SD distribution amplifier, triple reclocked electrical outputs
3405Txx/yy-2	3G/HD/SD dual CWDM SFP transmitters. Non-reclocking
3405R-2R	3G/HD/SD dual SFP receiver, reclocked electrical outputs
3405T13-R	3G/HD/SD Reclocked SFP transmitter, reclocked electrical loop output
3405Txx-R	3G/HD/SD Reclocked CWDM SFP transmitter, recloced electrical loop output
3405OO13-DA4	3G/HD/SD Reclocked SFP receiver, reclocked optical loop output and dual reclocked electrical outputs
3405OOxx-DA4	3G/HD/SD Reclocked SFP receiver, reclocked CWDM optical loop output and reclocked and electrical outputs

Note: xx/yy versions include the following, 27/29, 31/33, 35/37, 43/45 - Low Band
47/49, 51/53, 55/57, 59/61 - High Band

Note: xx versions include the following, 27, 29, 31, 33, 35, 37, 43, 45, 47, 49, 51, 53, 55, 57, 59, 61

3405FRS-BNC

Standalone Fiber Optic SFP BNC Frame

The Evertz 3405FRS is a miniature optical conversion platform. The 3505FRS can accommodate up to four of any Evertz 3405 series SFP, allowing the use of optical transmit, receive, regenerator or electrical distribution amplifier or changeover SFP's. With the ability to perform two optical/electrical conversions per SFP module, the 3405FRS can provide conversion for up to eight signals in total. Benefits of fiber optics for video transport include longer attainable distances, smaller/lighter cabling, reduced cable tray loads and electrical isolation. The 3405FRS provides an extremely compact, low-overhead means for simple electrical/optical conversion for interfacility transport, as well as overcoming the limitations imposed by coaxial cable in intra-facility applications. Although it is a compact enclosure, the 3405FRS provides carrier-grade features such as redundant power supply inputs and full remote monitoring and control over SNMP/VistaLINK®.

3405 series SFP's are able to handle ASI, SDI, HD-SDI and 3G digital video signals, as well as other signal rates up to 3 Gig on non-reclocked versions (e.g. MADI). The SFP modules are hot-swappable, allowing for quick servicing or easy reconfiguration or expansion at any time.

Features & Benefits

- Versatile, miniature "throwdown" type enclosure can be used for low-signal count permanent or ad-hoc applications.
- Convenient flange mounting.
- Any 3405SFP types may be installed, including optical transmit, receive, regenerator and electrical distribution amplifier and changeover switches.
- Dual, redundant power supplies may be accommodated (one power supply ships as standard, redundant unit is optional).
- Integrated controller for remote monitoring and control over SNMP/ VistaLINK®.

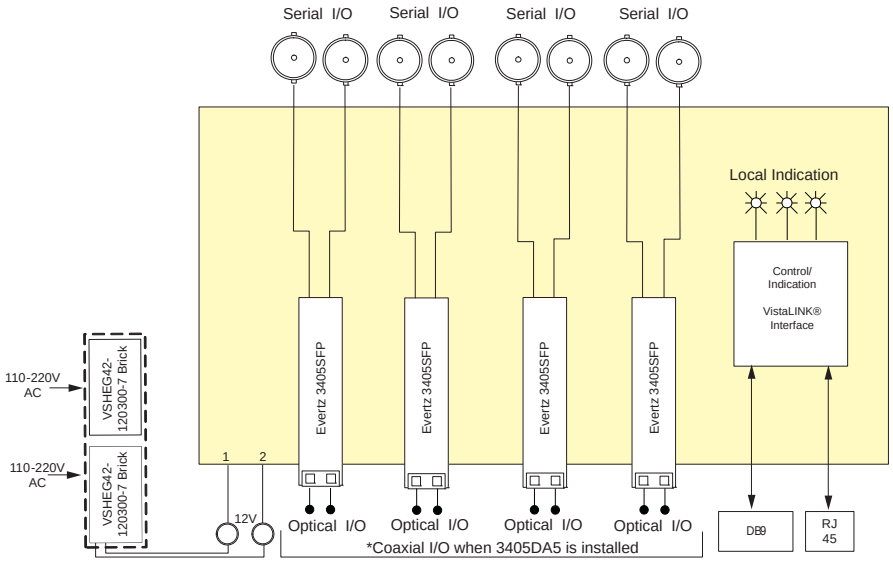

The Complete Solution Provider

Specifications

System:

Density:	Up to 4 SFP's
Communication and Control:	
Serial:	RS-232 - single Female mini 9-pin connector
Ethernet:	SNMP over IEEE 802.3/U (10/100 BaseTx) RJ45 connector
Control:	VistaLINK® / SNMP

Electrical Outputs:

Connector:	BNC per IEC 61169-8 Annex A
Impedance:	75Ω (nominal)

Physical:

Dimensions:	1.03"H x 7.08"W x 4.125"D
Module Capacity:	4 Evertz® SFP modules
Operating Temperature:	0-40°C

Electrical:

Power Supply Configuration:	Dual external supplies (primary/secondary VSHEG42-120300-7)
Voltage:	DC Input 12V DC (external power supplies required for 110-220V)
Max Power Consumption:	12W (fully loaded frame with all accessories) Note - power consumption dependent on SFP type

VSHEG42-120300-7 External Power Supply Brick:

AC Mains Input:	Auto ranging, 100 - 240 VAC, 50/60 Hz
Number of Outputs:	1
Output Voltage:	12VDC
Output Connector:	Coaxial power connector
Max Power Dissipation:	36W
Status Indicators:	Green OK LED

Ordering Information

3405FRS-BNC	Standalone Fiber Optic SFP BNC frame (includes primary power supply), SFP's and redundant power supply ordered separately

Note: SFP's sold separately, please specify at the time of ordering.

Power Supplies

VSHEG42-120300-7	Redundant power supply brick

Evertz® SFP Modules

The 3405FRS-BNC enclosure is compatible with any 3405 series optical or coaxial SFP. For optical SFP options, please see the "3405 Optical SFP Series" data sheet, and for coaxial SFP options please see the "3405 Coaxial SFP Series" data sheet.

POWER
1
2
SFP 1
B
A
SFP 2
B
A
SFP 3
B
A
SFP 4
B
A
ETHERNET
ACT
LINK
evertz
340SFRS-BNC

3405FRS-BNC
everlz
ETHERNET
ACT LINK
POWER
1
2
A
B
SFP 1
SFP 2
SFP 3
SFP 4

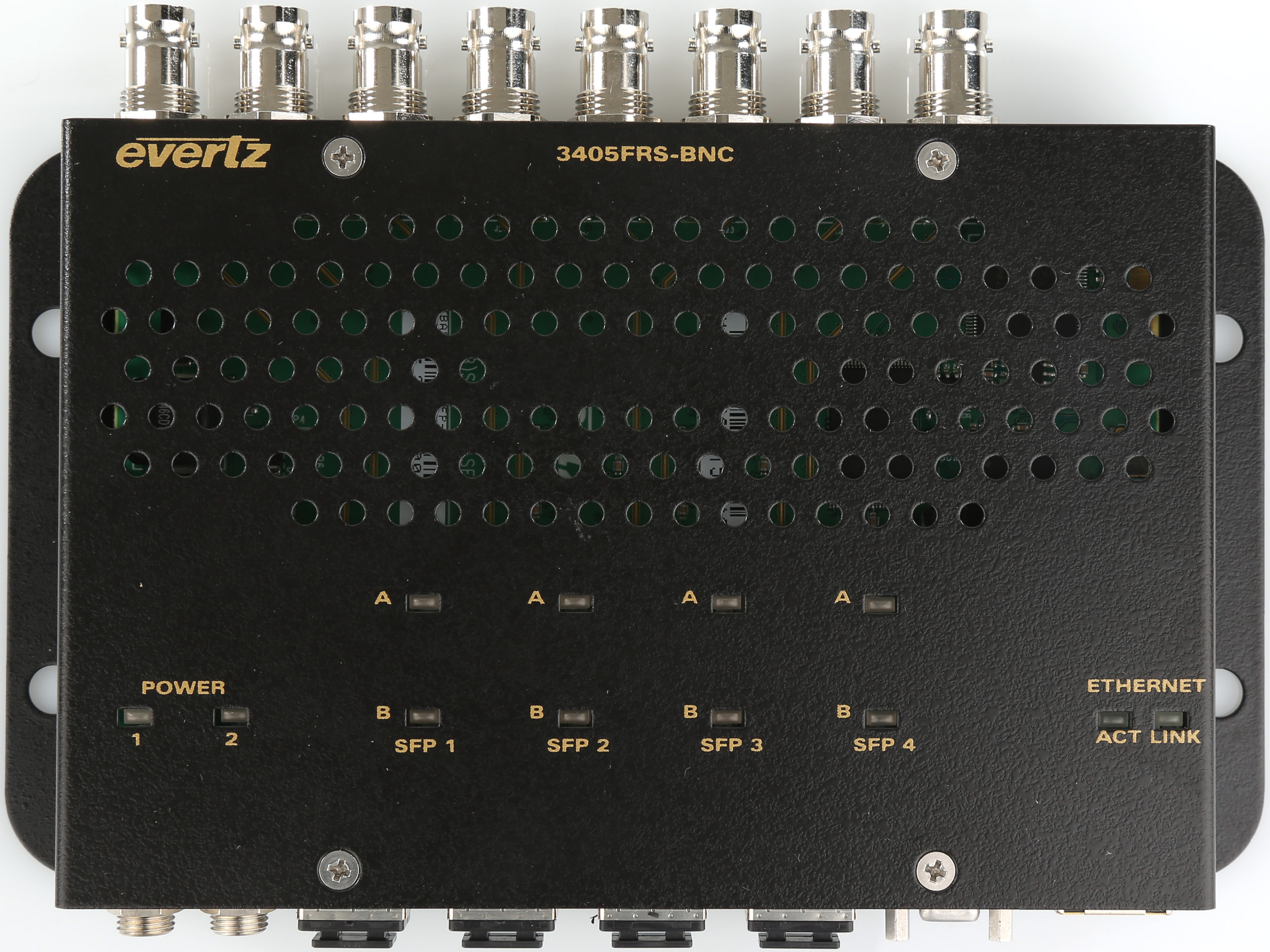
evertz
3405FRS-BNC
A
A
A
A
POWER
1
2
B
SFP 1
B
SFP 2
B
SFP 3
B
SFP 4
ETHERNET
ACT LINK

A
B
A
B
A
B
A
B
AMP
AMP
AMP
AMP
1
2
12VDC
SFP 1
SFP 2
SFP 3
SFP 4
COM
LINK
ACT
ETHERNET

SFP 4
B
A
SFP 3
B
A
SFP 2
B
A
SFP 1
B
A

1
2
12VDC
A
B
AMP
SFP 1
SFP 2
SFP 3
SFP 4
COM
LINK
ACT
ETHERNET
SFP 4
SFP 3
SFP 2
SFP 1