7702SP2, 7702SP-4, 7702SP2-LNB, 7702SP4-LNB

RF Passive Splitters

The 7702 series RF passive splitters provide distribution of RF signals in a 1x2 or 1x4 configuration (designated by SP2 or SP4 in the part number). The operating frequency range is 40MHz to 2200MHz allowing both 70/140MHz IF and L-band signal distribution. When equipped with the "-LNB" option, DC power can be passed through any of the outputs to the input for LNB power (input frequency range limited to 400MHz-2200MHz). Diode protection ensures that no conflicts arise in the event that multiple connections provide DC power.

The 7702SP2 and 7702SP4 occupy one card slot and can be housed in a 1RU frame which will hold up to three modules, a 3RU frame which will hold up to 15 modules, a 350FR portable frame that will hold up to 7 modules or a standalone enclosure.

Features & Benefits

- Passes 40-2200MHz frequency range RF signals (400MHz-2200MHz with -LNB option)
- Functions as a splitter or combiner
- 7700 series modular form factor for neat/clean system integration
- Completely passive design for high reliability
- Fully hot-swappable from front of frame
- -LNB option passes DC power to LNB

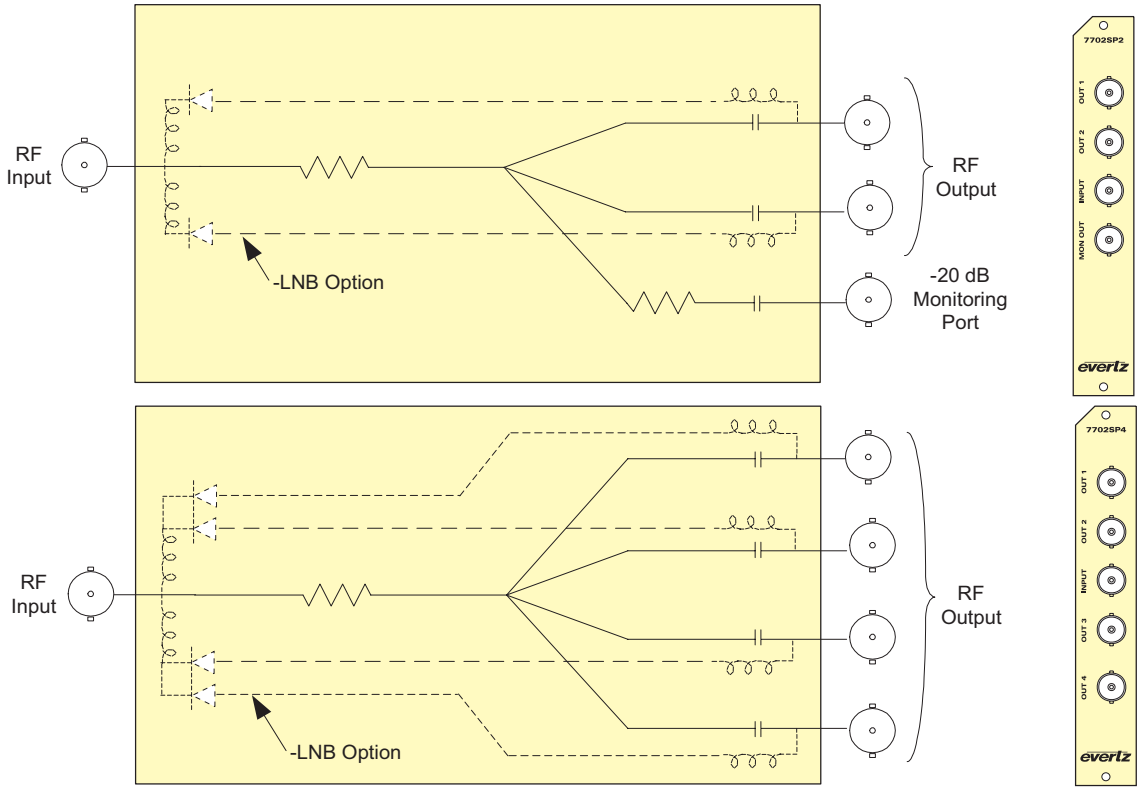

Specifications

RF Input:
Number of Inputs: 1
Connector: BNC, F type SMA optional
I/O Impedance: 75Ω, 50Ω optional
Input Frequency Range:
40-2200MHz
-LNB Version: 400-2200MHz
Return Loss:
250MHz-2200MHz: > 12dB

RF Outputs:
Number of Outputs:
7702SP2: 2+1 Monitor
7702SP4: 4
Connector: BNC, F-Type and SMA optional
Insertion Loss:
7702SP2: 5 ±1dB
7702SP4: 8 ±1dB
Monitor: -20dB ±2dB referenced to the input port
I/O Impedance: 75Ω, 5OΩ optional

Return Loss:
250MHz-2200MHz: > 12dB
Frequency Response:
± 1dB

Physical (number of slots):
350FR: 1
7700FR-C: 1
7800FR: 1

Ordering Information

7702SP2	1x2 Passive RF Splitter
7702SP2-LNB	1x2 Passive RF Splitter, passes LNB power
7702SP2-B50	1x2 Passive RF Splitter, 50Ω BNC Connectors
7702SP2-LNB-B50	1x2 Passive RF Splitter, passes LNB power, 50Ω BNC Connectors
7702SP2-S50	1x2 Passive RF Splitter, 50Ω SMA Connectors
7702SP2-LNB-S50	1x2 Passive RF Splitter, passes LNB power, 50Ω SMA Connectors
7702SP4	1x4 Passive RF Splitter
7702SP4-LNB	1x4 Passive RF Splitter, passes LNB power
7702SP4-B50	1x4 Passive RF Splitter, 50Ω BNC Connectors
7702SP4-LNB-B50	1x4 Passive RF Splitter, passes LNB power, BNC Connectors
7702SP4-S50	1x4 Passive RF Splitter, 50Ω SMA Connectors
7702SP4-LNB-S50	1x4 Passive RF Splitter, passes LNB power, SMA Connectors

Ordering Options Rear Plate must be specified at time of order
Eg: Model +SC +3RU

Rear Plate Suffix:

+3RU	3RU Rear Plate for use with 350FR, 7700FR-C or 7800FR Multiframe
+1RU	1RU rear plate for use with 7701FR Multiframe
+SA	Standalone Enclosure Rear Plate

Connector Suffix:

+F75	75Ω F type connectors

Enclosures

350FR	3RU Portable Multiframe which holds up to 7 single slot modules
7700FR-C	3RU Multiframe which holds up to 15 single slot modules
7800FR	3RU Multiframe which holds up to 15 single slot modules
7701FR	1RU Multiframe which holds up to 3 single or dual slot modules
S7701FR	Standalone Enclosure

The Complete Solution Provider

everlz

7702SP2+3RU

7702SP2+3RU

7702SP2+3RU

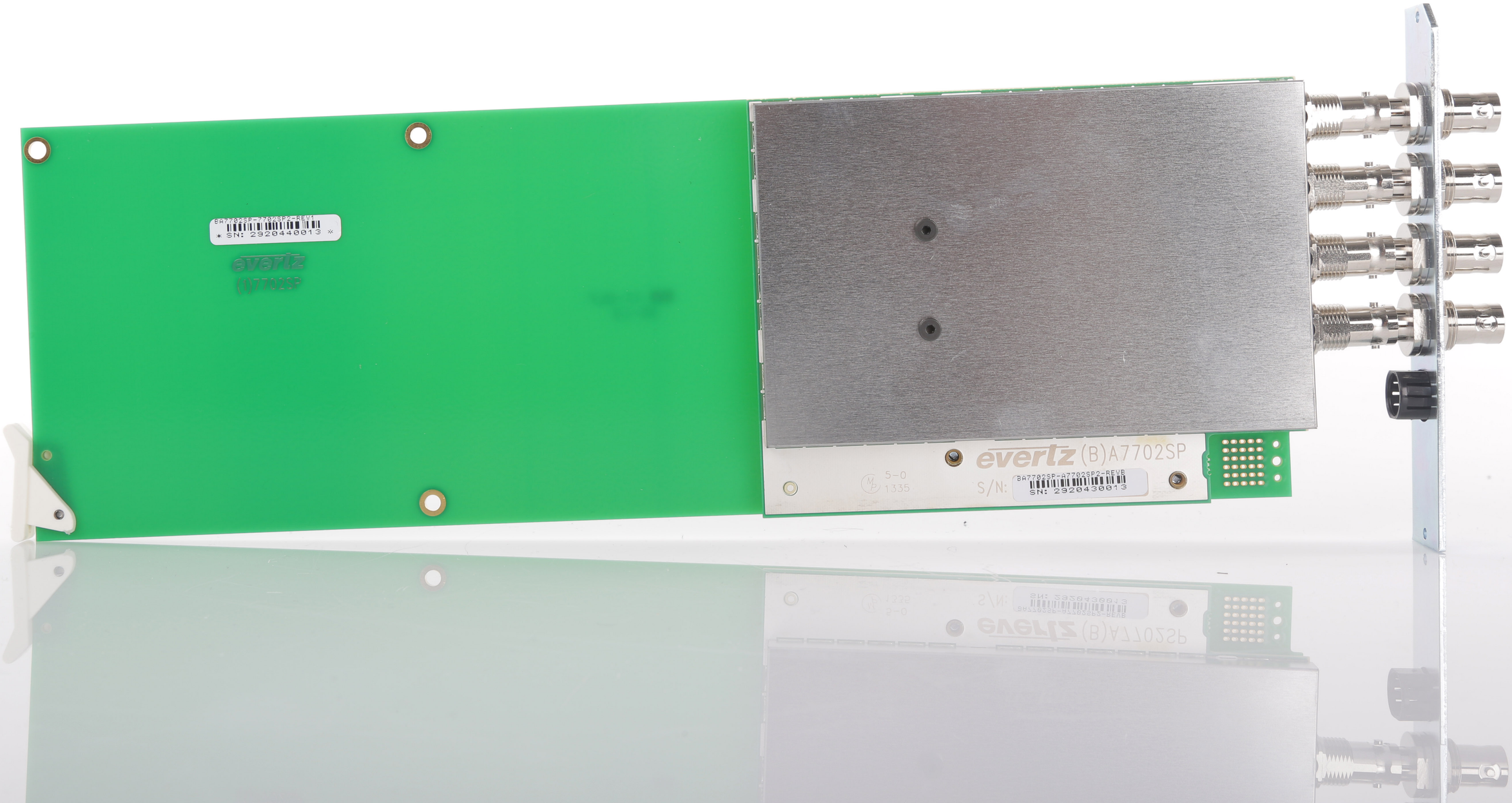
SN: 2920440013
everlz
(A)7702SP
everlz (B)A7702SP
5-0
1335
S/N:
SN: 2920430013

7702SP2+3RU

7702SP2+3RU

7702SP2+3RU

7702SP2+3RU

7702SP2+3RU

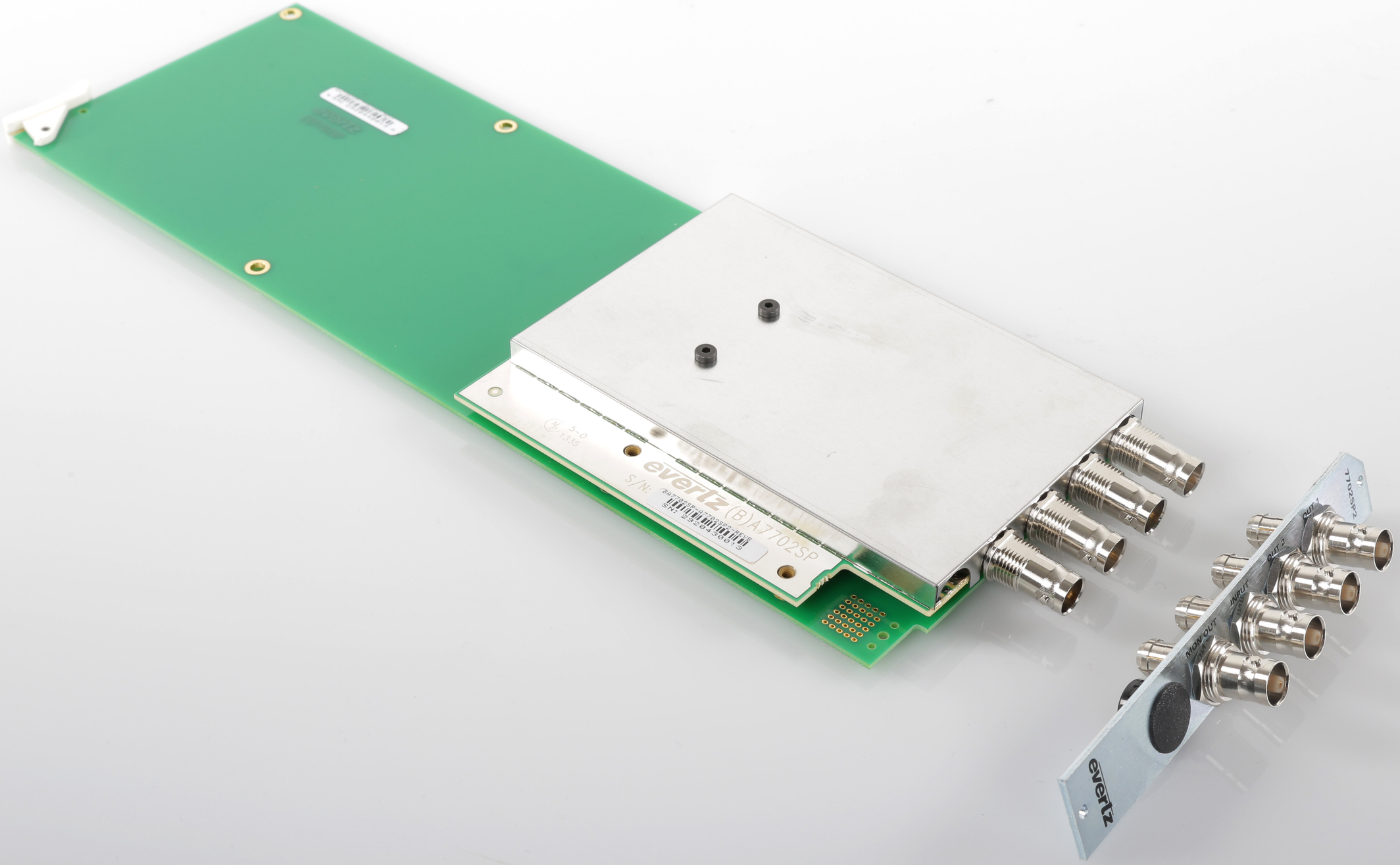
everlz
(B)A7702SP
S/N:
MON OUT
INPUT
OUT 1
OUT 2
OUT 3
7A2011
everlz
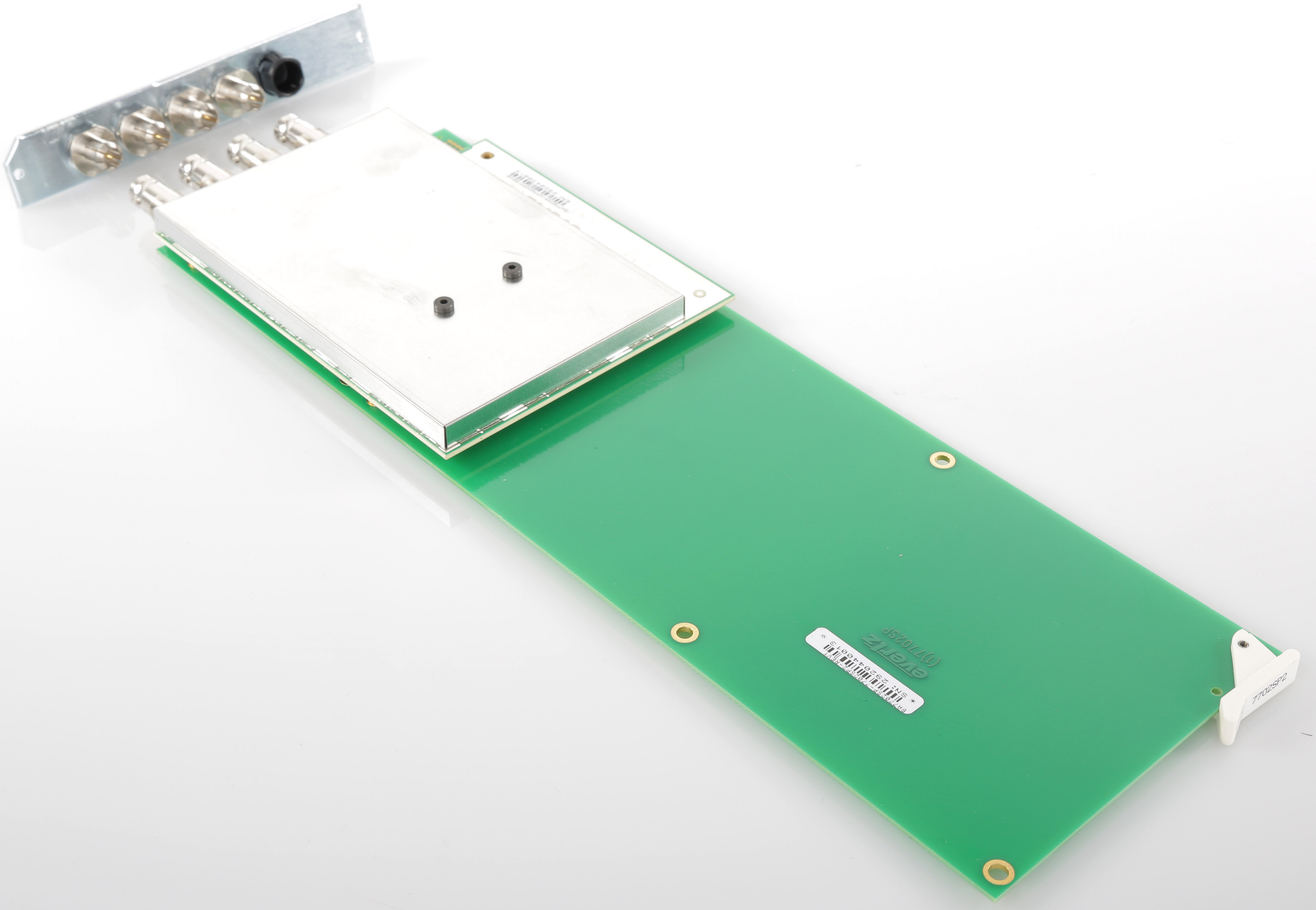
7702SP2+3RU