520AD4-DD-HD

HD/SD-SDI Audio De-embedder & Dolby-E® AC-3 Decoder & Re-embedder

The 520AD4-DD-HD Audio De-embedder & Dolby Decoder & Re-embedder extracts embedded audio from 2 specified groups as defined by SMPTE 299M from a 1.5Gb/s serial HD or as defined by SMPTE 272M from a 270Mb/s serial SD video signal.

One selected channel is processed by the on-card Dolby Decoder. If the channel contains Dolby-E® or Dolby Digital (AC-3)™, it will yield up to 8 additional discrete audio channels and the associated Dolby-E® metadata. Up to 8 selected channels may be optionally delayed up to 3 seconds and re-embedded into the output video and/or directed to 4 AES outputs. Video output may be optionally delayed up to 7 frames to help with lip sync. If PCM audio is embedded, the device acts as a simple 2 group audio de-embedder.

This device also handles the Dolby-E® Metadata. Metadata is optionally embedded in VANC and can be provided as an output for downstream devices (i.e. Dolby-Encoders, Multichannel Audio Tool, etc.). Dolby-E® is capable of carrying LTC data embedded within its stream. It can be selected as an output, instead of metadata.

For lip sync cohesion and ease of editing, Dolby-E® data is organized in blocks with lengths matching the associated video frame. The decoder will match the beginning of each output block with the start of video, as provided with the genlock input. Additional delay can be dialed up by the user, up to 3 seconds. An extra AES input is provided that can be configured as a backup channel, in the event the primary is lost, or as a voice-over source. This input can be re-configured as a metadata input which can be embedded in VANC, instead of the metadata coming from Dolby Decoder.

VistaLINK® enables control and configuration capabilities via Simple Network Management Protocol (SNMP). This offers the flexibility to manage the module status monitoring and configuration from SNMP enabled control systems such as Evertz VistaLINK® PRO locally or remotely.

The 520AD4-DD-HD is housed in the 3RU 500FR ***exponent*** frame that will hold up to 16 modules.

Features & Benefits

- Automatic switchover to backup audio source on loss of selected Dolby stream
- Adjustable video delay to match Dolby decoder audio delay (up to 7 frames)
- Headphone jack with monitoring stereo down-mix
- Dolby Metadata is embedded in HD VANC for downstream device decoding (refer to 520AD4-HD brochure)
- Secondary AES input with backup, voice-over or Dolby-E/AC-3™ content
- Card edge display for Dolby decoder status & audio channel peak levels bargraphs
- Flexible audio channel router
- VistaLINK® -capable for remote monitoring via SNMP (using VistaLINK® PRO) when installed in 500FR frame with 500FC VistaLINK® Frame Controller

Inputs

- Program output bypass relay protected
- SMPTE 292M - (1.5Gb/s serial digital), or SMPTE 259M
- Genlock NTSC-M, PAL-B, any tri-level
- AES input for backup/voice-over source
- Metadata input

Outputs

- 2 processed HD outputs (1 protected with bypass relay)
- 4 AES de-embedded and processed outputs
- 1 BNC configurable as LTC or Dolby metadata (RS-422/485)

Controls

- Audio group selection
- Audio channel selection

Card Edge LEDs

- Module Status
- Video Signal presence
- Selected audio group presence/errors
- Dolby decoder processing status
- Genlock health/compatibility
- AES signal presence

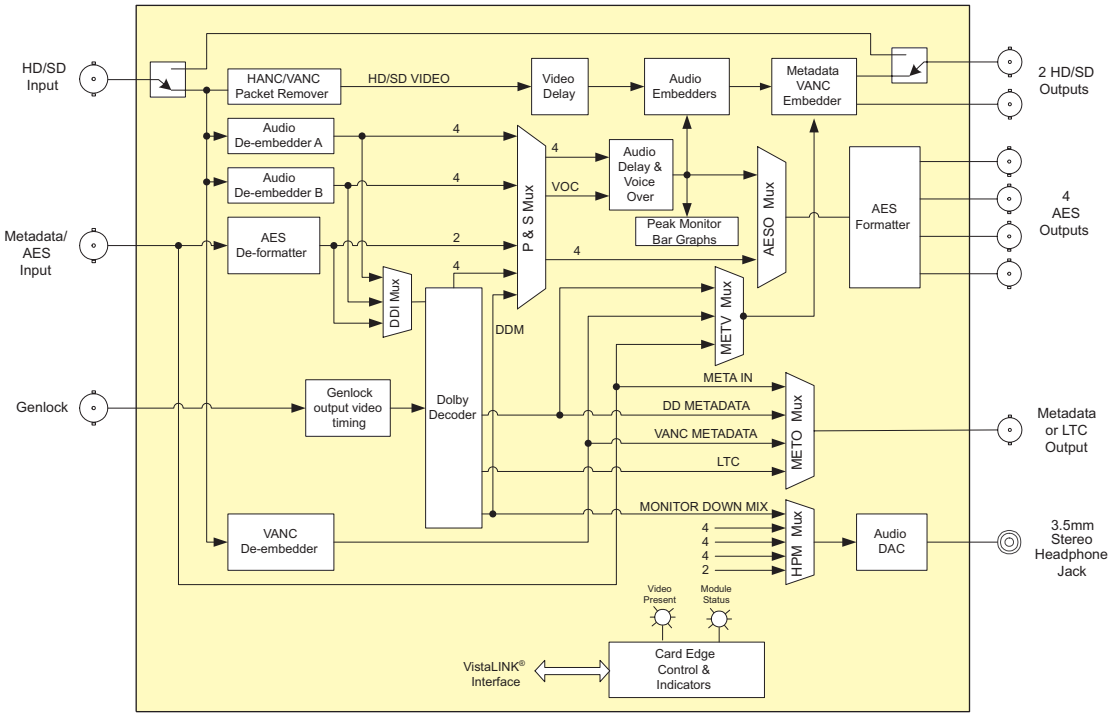

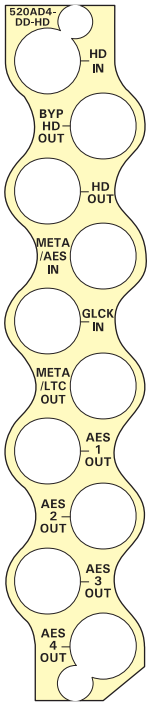

The Complete Solution Provider

Specifications

Serial Video Input:

Standard:	SMPTE 292M, 1080i/60, 1080i/59.94, 1080i/50, 1080p/30 (sF), 1080p/29.97(sF), 1080p/25 (sF), 1080/24 (sF), 1080/23.98 (sF), 720p/60, 720p/59.94, 1035i/60, 1035i/59.94 SMPTE 259M-C (270Mb/s) 525 or 625 line component
Connector:	BNC per IEC 61169-8 Annex A
Equalization:	Automatic 100m @ 1.5Gb/s with Belden 1694A (or equivalent), 25m with bypass relay active

Processed Serial Video Output:

Standard:	Same as input
Number of Outputs:	2
Connector:	BNC per IEC 61169-8 Annex A
Signal Level:	800mV nominal
DC Offset:	0V ±0.5V
Rise and Fall Time:	Per standard
Overshoot:	< 10% of amplitude
Wide Band Jitter:	< 0.2 UI
Metadata:	Embedded according to SMPTE 2020M

Metadata Input/Output:

Type:	Dolby-E® Metadata SMPTE RDD6
Connector:	*2 BNC per IEC 61169-8 Annex A (*BNC to DB9 dongles are provided)
Baud Rate:	115,200 baud

AES Audio Input:

Standard:	SMPTE 276M
Number of Inputs:	1
Connector:	BNC per IEC 61169-8 Annex A
Input Level:	0.1 to 2.5V p-p (5V p-p tolerant)
Input Impedance:	75Ω
Return Loss:	> 25dB 100kHz to 6MHz
Equalization:	Automatic to 1000m with Belden 1694A (or equivalent) @ 48kHz AES signal
Sample Rate:	48kHz ±100ppm

AES Audio Output:

Standard:	SMPTE 276M, single ended AES
Number of Outputs:	4
Connector:	BNC per IEC 61169-8 Annex A
Sample Rate:	48kHz
Impedance:	75Ω
Resolution:	Up to 24-bit

Genlock Input:

Type:	NTSC, PAL, black or any tri-level, all autodetect
Connector:	1 BNC per IEC 61169-8 Annex A
Impedance:	Hi-Z or 75Ω (jumper configurable)
Return Loss:	> 40dB to 10MHz

System Performance:

AC-3 Decode Delay:	32ms nominal
Dolby-E® Decode Delay:	1 frame nominal
De-embedding Latency:	600µs nominal
Additional Audio Delay:	0 to 3 seconds (user programmable)
Additional Video Delay:	0 to 7 frames (user programmable)

Electrical:

Voltage:	+12V DC
Power:	10W
EMI/RFI:	Complies with FCC Part 15 Class A, EU EMC Directive

Physical:

Number of slots:	1

Ordering Information

520AD4-DD-HD	HD/SD-SDI Audio De-embedder & Dolby-E/AC-3™ Decoder & Re-embedder

Enclosures	***exponent***
500FR	Compact High Density Distribution Frame
S501FR	Standalone enclosure