evertz

THE COMPLETE SOLUTION PROVIDER

Monitoring & Control
Fiber Optics
Master Control & Branding
Management Software
Time Code
Distribution & Conversion
Routing Systems
Processors
Digital Signage
Closed Captioning / EAS
Production
Post-Production
Multiviewers
L-Band & RF Products
Compressed DTV Products

2007/2008 Broadcast Pages

Master Control

QMC-2 Master Control

TAKE CONTROL

The Quartz QMC series offers intelligent solutions to the challenges of Master Control in today's ever-changing transmission environment.

Expanded Contents

1 **Master Control & Channel Branding** 1
QMC-MCS, QMC-2 & QMG
QMG
QMC-DP
Mini Master Control & Branding
Scalable Keyers, Logo and Media Inserters
Media & Logo Insertion
Overture™ Branding Software

2 **SNMP Monitoring & Control** 2
VistaLINK® & VistaLINK® PRO Plus

3 **Monitoring & Multi-viewers** 3
MVP™ Multi-Image Display & Monitoring System
7767VIP™ Compact Video & Graphic Display Solution
Quattro™ & AVM Discrete Video & Video Signal Monitoring

4 **7700 Series Modular • Terminal Equipment, Signal Processing & Distribution** 4
Frames
VistaLINK® Monitoring & Control
HD/SD Bypass Protection Routers with Downconverters
HD Downconverters & Upconverters
Audio Conversion
Embedders & De-Embedders (Audio/Data/GPI)
Digital to Component Analog Converters
Video D to A (Composite Encoders) & Audio Digital to Analog Conversion
Video A to D (Composite Decoders) & Audio Analog to Digital Conversion
Synchronizing, Delay & Keyer Products

5 **7700 Series Modular • Fiber/RF** 5
Satellite/RF Distribution Products
Analog Video/Audio Fiber Transport
SDI Fiber Transport
SDI/Audio Fiber Transport
SDI/Audio/Data Fiber Transport
HD-SDI Fiber Transport
HD-SDI Audio/Data Fiber Transport
Audio Fiber Transport
Intercom Fiber Transport
Datacom/Telecom Fiber Transport
Ethernet SONET/SDH Fiber Transport
L-Band & 70/140MHz IF Fiber Transport
Wavelength Regenerators
Optical Combiners/Splitters/Multiplexors & Bypass Switchers

6 **Compressed DTV Products, CODECS & Test Sets** 6
Transport Stream Monitor
HD Translators/CODECS
Reference & Test Generators

7 **Compact Modular • 500 *exponent* & 400 Series** 7
Frames & Control
500 Series with Looping
Analog-Video
AES & Analog Audio

8 **Routers** 8
High Density Core Routers
Xenon Routers
Q-Series Routers - Large, Small and Data
Topaz Series Routers
X-Series Bypass Routers (4x1 to 12x1)
RF Routers
Quartz Routers

9 **Closed Captioning, XDS & 1RU Monitoring** 9

10 **SPGs, Time Code, Clock Displays** 10
Slave Clocks
Analog Time Code
Master SPG, Master Clock & Test Set & ACO System
Digital Time Code

11 **Miniature Series & Mobile** 11

12 **Post-Production Accessories & Telecine Tools** 12
Production Tools
Post-Production Accessories & Telecine Suite Tools

SECTION 1: MASTER CONTROL SWITCHING & CHANNEL BRANDING

QMC-MCS, QMC-2 & QMG ---------- 1-7
QMC-MCS & QMC-2 Master Control Switchers ---------- 1-7
QMG Quartz Media Graphics ---------- 8
QMC-DCP QMC Desk Control Panel ---------- 9
Master Control & Branding ---------- 10-11
Multi-Channel Branding ---------- 12-24
7725DSK-LG SD Downstream Keyer with Internal Logo with VistaLINK® support ---------- 17
7725DSK-LG-HD HD Downstream Keyer with Internal Logo with VistaLINK® support ---------- 17
HD9626DSK HD Downstream Keyer ---------- 18-19
HD9725LG HD/SD Logo Inserter with Front Panel Control/Slate Generator ---------- 20-21
HD9725LGA HD/SD Media Keyer with Front Panel Control/Slate Generator ---------- 20-21
9725LG SDI Logo Inserter System ---------- 22-23
9725LGA SDI Media Inserter System with audio support ---------- 22-23
AN9725LG Analog Logo Inserter System ---------- 24
Overture™ Branding Software ---------- 25

SECTION 2: SNMP MONITORING & CONTROL

VistaLINK® & VistaLINK® PRO Plus ---------- 26-32

SECTION 3: MONITORING & MULTI-VIEWERS

MVP™ Large Scale Multi-viewers ---------- 33-37
7767 VIP™ Small to Mid-Scale- ---------- 38-40
7760 Quattro™ & AVM ---------- 41
Legend ---------- 43
7767VIP4-HSN 4 asynchronous HD/SD/NTSC/PAL inputs with embedded audio, one background DVI-I ---------- 44-45
7767VIP4-HSN-G 4 asynchronous HD/SD/NTSC/PAL inputs with embedded audio, one background DVI-I & single built-in fiber output ---------- 44-45
7767VIP4-SN 4 asynchronous SD/NTSC/PAL inputs with embedded audio, one background DVI-I (DVI-D or RGBHVI ---------- 44-45
7767VIP8-HSN 8 asynchronous HD/SD/NTSC/PAL inputs with embedded audio, one background DVI-I ---------- 46-47
7767VIP8-HSN-G 8 asynchronous HD/SD/NTSC/PAL inputs with embedded audio, one background DVI-I & single built-in fiber output ---------- 46-47
7767VIP8-SN 8 asynchronous SD/NTSC/PAL inputs with embedded audio, one background DVI-I (DVI-D or RGBHVI ---------- 46-47
7767VIP12-HSN 12 asynchronous HD/SD/NTSC/PAL inputs with embedded audio, one background DVI-I ---------- 48-49
7767VIP12-HSN-G 12 asynchronous HD/SD/NTSC/PAL inputs with embedded audio, one background DVI-I & single built-in fiber output ---------- 48-49
7767VIP12-SN 12 asynchronous SD/NTSC/PAL inputs with embedded audio, one background DVI-I ---------- 48-49
9767VIP8-NGI 1RU 4 asynchronous DVI-I (DVI-D or RGBHV with adapter) inputs and four NTSC/PAL (or S-Video) inputs,one background DVI-I (DVI-D or RGBHV with adapter) input. Single DVI-I (DVI-D or RGBHV with adapter) or one serial monitoring output. Includes VistaLINK® VLPRO-C software configuration tool and Maestro-VIP™ display layout GUI ---------- 50-51

Quattro™ - Four Channel Monitoring
7765AVM-4/-4A Quattro™, Four SDI Video Quad Split Display with Digital Audio Monitoring ---------- 52-53
7766AVM-4A,-S4A Analog Quattro™, Four Analog Video & Quad Split with Analog Audio Monitoring ---------- 54-55

Single & Multi-Channel Monitoring Systems-Video, Audio & Data
Discreet Channel Monitoring
7760AVM2 (A-B) SDI Video and Audio Monitoring/Conversion with On-screen Display (Single Slot) with Teletext Subtitle Decoder ---------- 56-57
7760AVM2-HD HD Video & Audio Monitoring ---------- 56-57
7760AVM-LITE A&B SDI Video and Audio Monitoring/Conversion (without On-screen Display) ---------- 58
7760VMS-HD HD Monitoring Splitter ---------- 59
7761AVM2-DC Dual Channel Video & Analog Audio Monitoring ---------- 60-61
7761AVM2-SDC Dual S-Video & Analog Audio Monitoring ---------- 60-61
7761AVM2-SDC-S Dual S-Video & Analog Audio Monitoring with Dual S-Video Outputs ---------- 60-61

Audio/Video Monitoring Bulkhead Breakout Panels (BHP)
7767BHP VIP™ Bulkhead Breakout Panels ---------- 62-63
776x-BHP AVM Bulkhead Breakout Panels ---------- 62-63

SECTION 4: 7700 SERIES MODULAR • TERMINAL EQUIPMENT, SIGNAL PROCESSING & DISTRIBUTION

Frames:
7700FR-C 3RU Multiframe which holds up to 15 single slot modules ---------- 64
7700FR-C-48VDC 3RU Multiframe which holds up to 15 single slot modules with 48VDC power supply ---------- 64
7701FR 1RU Multiframe which holds up to 3 single or dual slot modules ---------- 64
S7701FR Standalone frame ---------- 64
7700R-SC/ -SC-R System Controller, single processor ---------- 65

VistaLINK® Monitoring and Control:
7700FC VistaLINK® Frame Controller ---------- 66
7700GPI VistaLINK® General Purpose (GPI I/0) Interface Module ---------- 67
7700PTX Universal Protocol Translator ---------- 68
7700TPI VistaLINK® Third Party Interface Module ---------- 69
9000NCP VistaLINK® Network Control Panel (1RU) ---------- 70
9000NCP2 VistaLINK® Network Control Panel (2RU) ---------- 71

HD/SD Bypass Protection Routers with Downconverters:

7700R2x2-HD	2x2 HD/SD Bypass Protection Router	72-73
7700RD2x2-HD	2x2 HD/SD Bypass Protection Router with Dual HD Downconverter	72-73
7700R2x2-HES	2x2 HD/SD Bypass Protection Router with SoftSwitch™	72-73
7700R4x1-HD	4x1 HD/SD-SDI Modular Router	74

HD DAs

7700DA6-HD-L	HD/SD-SDI Reclocking Distribution Amplifier with Loop Thru	75
7700DA7-HD	HD SDI Reclocking DA, (1x7)	76
7700DA-HD	HD SDI Reclocking DA, (1x4)	77
7700DA8-HD	HD SDI Reclocking DA, (1x8)	77
7700ACO-HD	HD/SD SDI 8 Channel AES & RS232/RS422 Auto Changeover	78

SDI & AES DAs

7700VMDA	SDI Monitoring Reclocking Distribution Amplifier	79
7700VMDA-2Q	SDI Monitoring Reclocking Distribution Amplifier, 2 channels, 3 outputs	79
7700DA-DS3	DS3 Distribution Amplifier	80
7700DA-E3	E3 Distribution Amplifier	81
7700DA	143-540Mb/s, DVB-ASI, SMPTE 310M Reclocking Distribution Amplifier (1x4)	82
7700DA-N	143-540 Mb/s, DVB-ASI,SMPTE 310M, M2S Non-relocking Distribution Amplifier (1x4)	82
7700DA6-L	SD-SDI Reclocking Distribution Amplifier with Loop Thru	83
7700DA7	143-540 Mb/s, DVB-ASI, SMPTE 310M, M2S Reclocking Distribution Amplifier (1x7)	84
7700DA-AESU	Auto Equalizing unbalanced AES/EBU Distribution Amplifier	85
7700DA-AESB	Auto Equalizing Balanced AES/EBU Distribution Amplifier	86
7700DA-AES-RJ	Auto Equalizing Balanced AES/EBU Distribution Amplifier over CAT 5 Cable	87

ANALOG DAs

7700ADA6-EQ-L	Equalizing Analog Video Distribution Amplifier with Loop Thru	88
7700ADA6-L	Analog Video Distribution Amplifier with Loop Thru	89
7700ADA7	Analog Video Equalizing Distribution Amplifier (1X4)	90
7700ADA-EQ	Analog Video Equalizing Distribution Amplifier (1X4)	91
7700ADA7-EQ	Analog Video Equalizing Distribution Amplifier (1X7)	92
7700ADA-AUD	Dual analog Audio Distribution Amplifier (2-1X4)	93
7000ADA-AUD-MM	Dual Analog Audio Distribution Amplifier with Mono Mix	94
7700ADA-ETSI	High Amplitude Analog Distribution Amplifier (1x4)	95

HD Down Converters & Upconverters & ARCs:

7710ARC	SD Aspect Ratio Converter	96-97
7710ARC-F	SD Aspect Ratio Converter with Fill Input and Keying	96-97
7710DCDA-HD	HD Down Converter & Distribution Amplifier	98-99
7710UC-KF	HD Key/fill Upconverter	100
7710NR-HD	HD/SD Noise Reducer with Image Enhancement	101
7710XC-HD	HD Cross Converter with VANC and Embedded Audio support	102-103
7710XC-AES4-HD	HD Cross Converter with VANC, Embedded Audio and discrete AES support	102-103
7710XUC-HD	HD Format Up/Cross Converter	104-405
7710XUC-AES4-HD	HD Format Up/Down/Cross Converter with external AES	104-105
7710XUDC-AES4-HD	HD Format Up/Down/Cross Converter with external AES	104-105
7711UC-HD	HD Up Converter (with Noise Reduction and Image Enhancement)	106-107
7711UC-AES4-HD	HD Up Converter (with Noise Reduction and Image Enhancement) and external AES	106-107
7713HDC	Downconverter & Distribution Amplifier	108-109
7714HDC	Downconverter & Distribution Amplifier	110-111

Audio Conversion:

7720ADC-A4	Quad Analog Audio to Dual AES converter	112
7720DAC-A4, -A4-B	Dual AES to Quad Analog audio converter	113
7720AM-AES4	AES Audio Mixer - Shuffler	114
AESIMP-12, -12F	AES XLR BNC Bulk Impedance converters	115

Embedders & De-embedders (Audio /Data/GPI):

7721AE4-HD	HD 4 AES Pair Audio Embedder	116
7721AD(-A4,4)-HD	HD SDI AES Audio De-embedder	117
7721AE8-HD	HD/SD 8 AES (16 Channel) Audio Embedder	118
7721AD8-HD	HD/SD 8 AES (16 Channel) Audio De-embedder	119
7721AE-A4-HD	HD/SD Analog Audio Embedder	120
7721AE-A4	SD Analog Audio Embedder	121
7720AE4	SDI 4 AES Pair Embedder	122
7720AD-A4,AD4,AD4-B)	SDI AES Audio De-embedder with 4 unbalanced AES Outputs (2 audio groups)	123
7720AD-B-A4-LTC	SDI AES Audio De-embedder with 4 balanced AES outputs, 4 analog audio outputs and VITC to LTC Translator	123
7720AD8-DD-HD	HD/SD Audio De-embedder & Dolby E/AC-3 Decoder & Re-embedder	124-125
7721AE8-DE-HD	HD/SD Audio Embedder & Dolby E Encoder & Re-embedder	126
7721DE4-HD	HD/SD Quad Data Embedder	127
7721DD4-HD	HD/SD Quad Data De-embedder	128

Digital to Component Analog Converters:

7730DAC-HD	HD SDI to HD Component Analog Video Converter	129
7730DAC	SDI to Component Analog Video Converter	130-131
7730DAC-A4	SDI D to A Component Analog Video Converter with a four-channel Analog Audio converter/embedder	130-131
7730ADC	Component Analog Video to SDI Converter	132-133
7730ADC-A4	Component Analog Video to SDI Converter with four channel Analog Audio Converter/Embedder	132-133
7730ADC-HD	HD Component Analog Video to HD SDI Converter	134-135
7730ADC-A4-HD	HD Component Analog Video to HD SDI Converter with a four channel Analog Audio Converter/Embedder	134-135

Video D to A (Composite Encoders) & Audio Digital to Analog Conversion:
7736CEM Component SDI to composite analog video encoder with optional frame synchronizer ----------136-137
7736CEM-A4 Component SDI to composite analog video & audio encoder with optional frame synchronizer ----------136-137
7736CE2,-A4, -A8 Dual Composite Encoder (-A4 with 4 analog outputs and -A8 with 8 analog outputs) ----------138-139

Video A to D (Composite Decoders) & Audio Analog to Digital Conversion:
7736CDM Composite analog video to SDI decoder, OSD and VistaLINK® monitoring with optional frame synchronizer -------140-141
7736CDM-A4 Composite analog video to SDI decoder, OSD and VistaLINK® monitoring with optional frame synchronizer -------140-141
7736CD2, -A4, -A8 Dual Composite Decoder (-A4 with 4 analog outputs and -A8 with 8 analog outputs) ----------142-143

Synchronizing, Delay & Keyer Products:
7746FSE SD Frame Synchronizer ----------144-145
7746FS-EAES4 SD Frame Synchronizer with 4 AES audio pairs and embedded audio processing & AES support ----------144-145
7746FSE-HD HD/SD Frame Synchronizer ----------146-147
7746FS-EAES4-HD HD/SD Frame Synchronizer with 4 AES audio pairs, embedded audio processing and AES support ----------146-147
7746FS-EAES8-HD HD/SD Frame Synchronizer with 8 AES audio pairs and embedded audio processing & AES Support ----------148-149
7746FS-EAES8-DD-HD HD/SD Frame Synchronizer with 8 AES audio pairs and embedded audio processing & AES Support, Dolby E ----150-151
7743DLY-HD HD/SD Video Delay ----------152
HDSD9545DLY-PRO HD/SD Profanity Protection System-PRO ----------154-155
7725VBI-K-HD HDSD VBI Sidechain Bridge ----------156-157

SECTION 5: 7700 MODULAR - FIBER/RF

Satellite/RF Distribution Products:
7702&7703DA4-RF 10MHz-3GHz RF 1 x 4 Active Splitter ----------158
7702&7703DA8-RF 10MHz-3GHz RF 1 x 8 Active Splitter ----------159
7702&7703BPX-IF 2x1 RF Protection Switch for IF Frequencies ----------160
7702&7703BPX-LB 2x1 RF Protection Switch for L-Band Frequencies ----------161
7702LPS-2 Dual Port LNB Power Inserter ----------162
7703LPS-2 Dual Port LNB Power Inserter with NMP/VistaLINK® support ----------162

Analog Video/Audio Fiber Transport
7707ADVT Analog or SDI Video with 4-Channel Analog or AES Audio Fiber Transmitter ----------164-165
7707ADVR Analog or SDI Video with 4-Channel Analog or AES Audio Fiber Receiver ----------166-167
7707CVDTA/CVDTA-A4 Analog Video + Bi-di RS-232/422 Fiber Transmitter, dual fiber, 1310nm TX & RX ----------168-169
7707CVDRA/CVDRA-A4 Analog Video + Bi-di RS-232/422 Fiber Receiver, dual fiber, 1310nm TX & RX ----------170-171
7707CVTA Analog Video with 4-channel Analog Audio Fiber Transmitter 1310nm FP Laser, VistaLINK® ----------172-173
7707CVTA-2 Analog Video with 4-channel Analog Audio Fiber Transmitter 1310nm FP Laser, VistaLINK® ----------172-173
7707CVT-4-A16 Quad Analog Video, 16 Analog, Audio Fiber Transmitter 1310nm FP Laser, VistaLINK® ----------174
7707CVTA-TRI Tri Level Sync with 4-channel Analog Audio Fiber Transmitter 1310nm FP Laser, VistaLINK® ----------176-177
7707CVTA-2-TRI Dual Tri Level Sync with 4-channel Analog Audio Fiber Transmitter, 1310nm FP Laser, VistaLINK® ----------176-177
7707CVRA-TRI Tri Level Sync with 4-channel Analog Audio Fiber Receiver 1310nm FP Laser, VistaLINK® ----------178-179
7707CVRA-2-TRI Dual Tri Level Sync with 4-channel Analog Audio Fiber Receiver, 1310nm FP Laser, VistaLINK® ----------178-179
7707SVT-2 Dual S- Video Fiber Transmitter, 1310nm FP Laser, VistaLINK® ----------180
7707CVRA Analog Video with 4-Channel Analog Audio Fiber Receiver, VistaLINK® ----------181
7707CVRA-2 Dual Analog Video with 4-Channel Analog Audio Fiber Receiver, VistaLINK® ----------181
7707CVR-4-A16 Quad Analog Video Fiber Receiver, VistaLINK® ----------182
7707SVR-2 Dual S-Video Fiber Receiver, VistaLINK® ----------183
7707RGBT DVI and VGA H/V RGB Video Fiber Transmitter, VistaLINK® Monitoring ----------184-185
7707RGBR DVI and VGA H/V RGB Video Fiber Receiver, VistaLINK® Monitoring ----------186-187
7707DVIT DVI/KVM Fiber Transmitter ----------188-189
7707DVIR DVI/KVM Fiber Receiver ----------190-191

SDI Fiber Transport
7705EO-3 Triple SDI Electrical to Optical Converter, 19.4Mb/s or 143-540Mb/s ----------192
7705OE-3 Triple SDI Optical to Electrical Converter, 19.4Mb/s or 143-540Mb/s ----------193
7705EO SDI Electrical to Optical Converter, 19.4Mb/s or 143-540Mb/s ----------194
7705OE SDI Optical to Electrical Converter, 19.4Mb/s or 143-540Mb/s ----------195
7707EO-3 Triple SDI Electrical to Optical Converter, 19.4Mb/s or 143-540Mb/s, VistaLINK® Monitoring ----------196
7707OE-3 Triple SDI Optical To Electrical Converter, 19.4Mb/s or 143-540Mb/s, VistaLINK® Monitoring ----------197
7707EO SDI Electrical to Optical Converter, 19.4Mb/s or 143-540Mb/s, VistaLINK® Monitoring ----------198
7707OE SDI Optical to Electrical Converter, 19.4Mb/s or 143-540Mb/s, VistaLINK® Monitoring ----------199
2405EO SDI Miniature Optical Transmitter, 19.4Mb/s or 143-540Mb/s ----------200
2405OE SDI Miniature Optical Receiver, 19.4Mb/s or 143-540Mb/s ----------201

SDI/Audio Fiber Transport
7707VAT SDI with 2 AES Audio Transmitter, VistaLINK® Monitoring ----------202
7707VAR SDI with 2 AES Audio Receiver, VistaLINK® Monitoring ----------203
7707VAT-A4 SDI with 4 Analog Audio Fiber Transmitter, VistaLINK® Monitoring ----------204
7707VAR-A4 SDI with 4 Analog Audio Fiber Receiver, VistaLINK® Monitoring ----------205
7707VT-4 4 SDI Fiber Transmitter ----------206
7707VR-4 4 SDI Fiber Receiver ----------207
7707VT-8 8 Channel SDI Fiber Transmitter ----------208
7707VR-8 8 Channel SDI Fiber Receiver ----------209
7707VT-2-HD Dual HDSDI Fiber Transmitter ----------210
7707VR-2-HD Dual HDSDI Fiber Receiver ----------211

SDI/Audio/Data Fiber Transport
7707MT SDI, 2 AES Audio, Bi-Directional RS-232/422, 2 GPI and 2 GPO, Fiber Transmitter, VistaLINK® Monitoring -------212-213
7707MR SDI, 2 AES Audio, Bi-Directional RS-232/422, 2 GPI and 2 GPO, Fiber Receiver, VistaLINK® Monitoring ---------214-215
7707MB Bi-directional Transceiver for 1 SDI, 2 AES, RS232/422, VistaLINK® Monitoring ----------216-217

HD-SDI Fiber Transport
7705EO-HD HDTV Electrical to Optical Converter, 19.4Mb/s to 1.5Gb/s ----------218
7705OE-HD HDTV Optical to Electrical Converter, 19.4Mb/s to 1.5Gb/s ----------219
7707EO-3-HD Triple HDTV Electrical to Optical Converter, 19.4Mb/s to 1.5Gb/s, VistaLINK® Monitoring ----------220
7707OE-3-HD Triple HDTV Optical to Electrical Converter, 19.4Mb/s to 1.5Gb/s, VistaLINK® Monitoring ----------221
7707EO-HD HDTV Electrical to Optical Converter, 19.4Mb/s to 1.5Gb/s, VistaLINK® Monitoring ----------222
7707OE-HD HDTV Optical to Electrical Converter, 19.4Mb/s to 1.5Gb/s, VistaLINK® Monitoring ----------223
7707VT-4-HS Quad SD/Dual HD Fiber Transmitter ----------224
7707VR-4-HS Quad SD/Dual HD Fiber Receiver ----------225
2405EO-HD HDTV Miniature Optical Transmitter Module , 19.4Mb/s to 1.5Gb/s ----------226
2405OE-HD HDTV Miniature Optical Receiver Module , 19.4Mb/s to 1.5Gb/s ----------227

HD-SDI Audio/Data Fiber Transport
7707ADVT-HD Analog or SDI or HD Video with 4/Channel Analog or AES Audio Fiber Transmitter ----------228-229
7707ADVR-HD Analog, SDI or HD-SDI Video & Analog/AES Audio Fiber Optic Receiver ----------230-231
7707VAR-HD HDTV with 4 AES Audio Fiber Receiver ----------232
7707VAT-HD HD-SDI with 4 AES Audio Fiber Transmitter ----------233
7707MRA-HD-F2 HD-SDI, Four AES Audio, Bi-Directional RS-232/422, 1 GPI/GPO, Fiber Receiver, VistaLINK® ----------234-235
7707MRA-HD-W HD-SDI, Four AES Audio, Bi-Directional RS-232/422, 1 GPI/GPO, Fiber Receiver, single WDM VistaLINK® ------234-235
7707MTA-HD-F2 HD-SDI, Four AES Audio, Bi-Directional RS-232/422, 2 GPI/GPO, Fiber Transmitter, VistaLINK® ----------236-237
7707MTA-HD-W HD-SDI, Four AES Audio, Bi-Directional RS-232/422, 2 GPI/GPO, Fiber Transmitter, single WDM VistaLINK® ----236-237

Audio Fiber Transport
7707AT-8 Eight Channel AES Audio Fiber Transmitter Mux-VistaLINK® Monitoring ----------238
7707AT-8U Eight Unbalanced Channel AES Audio Fiber Transmitter Mux-VistaLINK® Monitoring ----------238
7707AT-16 Sixteen Channel AES Audio Fiber Transmitter Mux, VistaLINK® Monitoring ----------238
7707AT-A8 Eight Channel Analog Audio Fiber Transmitter Mux-VistaLINK® Monitoring ----------239
7707AT-A12 Twelve Channel Analog Audio Fiber Transmitter Mux, VistaLINK® Monitoring ----------239
7707AR-8 Eight Channel AES Audio Fiber Receiver Demux, VistaLINK® Monitoring ----------240
7707AR-8U Eight Unbalanced Channel AES Audio Fiber Receiver Demux, VistaLINK® Monitoring ----------240
7707AR-16 Sixteen Channel AES Audio Fiber Receiver Demux, VistaLINK® Monitoring ----------240
7707AR-A8 Eight Channel Analog Audio Fiber Receiver Demux, VistaLINK® Monitoring ----------241
7707AR-A12 Twelve Channel Analog Audio Fiber Receiver Demux, VistaLINK® Monitoring ----------241

Intercom Fiber Transport
7707IT-3 Three-Channel Intercom Transceiver, VistaLINK® Monitoring ----------242-243
7707IT-8 Eight-Channel Intercom Transceiver, VistaLINK® Monitoring ----------242-243

Datacom/Telecom Fiber Transport
7707DT Multi RS-232/422/485 Fiber Data Transceiver - VistaLINK® Monitoring ----------244-245
7707DT-GPIO Multi RS-232/422/485 Fiber Data Transceiver with GPIO-VistaLINK® Monitoring ----------244-245
7707ET Ethernet Fiber Transceiver - VistaLINK® Monitoring ----------246-247
7707ET-TE1 Ethernet and T1/E1/JI Fiber Transceiver - VistaLINK® Monitoring ----------248-249
7707ET-4 Quad Ethernet Fiber Transceiver - VistaLINK® Monitoring ----------250-251
7707GT Gigabit Ethernet Fiber Transceiver - VistaLINK® Monitoring ----------252-253
7707GPS-DT Dual Fiber GPS Data Transmitter ----------254
7707GPS-DR Dual Fiber GPS Data Receiver ----------255
7707EO-DS3 DS3 Electrical to Optical Converter - VistaLINK® Monitoring ----------256
7707OE-DS3 DS3 Optical to Electrical Converter - VistaLINK® Monitoring ----------257
7707EO-E3 E3 Electrical to Optical Converter ----------258
7707OE-E3 E3 Optical to Electrical ----------259

Ethernet SONET/SDH Fiber Transport
7707VT-8-OC48 Eight Channel SDI + Ethernet SONET/SDH Fiber Transmitter, 1310nm FP laser, VistaLINK® ----------260-261
7707VR-8-OC48 Eight Channel SDI + Ethernet SONET/SDH Fiber Receiver, 1310nm laser, VistaLINK® ----------262-263
7707VT-2-OC12 Dual SDI/ASI/SDTi + Ethernet SONET/SDH Fiber Transmitter, 1310nm FP laser, VistaLINK® ----------264
7707VR-2-OC12 Dual SDI/ASI/SDTi + Ethernet SONET/SDH Fiber Receiver, 1310nm FP laser, VistaLINK® ----------265

L/Band and 70/140MHz IF Fiber Transport
7705IFTA 70/140Mhz IF Fiber Transmitter ----------266
7705IFRA 70/140Mhz IF Fiber Receiver ----------267
7705LTA L-Band Satellite Fiber Transmitter ----------268
7705LR L-Band Satellite Fiber Receiver ----------269
7707IFTA 70/140Mhz IF Fiber Transmitter ----------270-271
7707IFRA 70/140Mhz IF Fiber Receiver ----------272-273
7707LR L-Band Satellite Fiber Receiver - VistaLINK® Monitoring ----------274-275
7707LR-WB L-Band Satellite Fiber Receiver, Wideband ----------274-275
7707LTA L-Band Satellite Fiber Transmitter - VistaLINK® Monitoring ----------276-277
7707LTA-WB L-Band Satellite Fiber Receiver, Wideband ----------276-277
2405LT L-Band Standalone/Weatherproof Fiber Transmitter ----------450
2407LT L-Band Standalone/Weatherproof Fiber Transmitter with AGC ----------450
2400PSUA-4 Outdoor, quad output power supply ----------451

Wavelength Regenerators
7707OO Optical Regenerator/Wavelength Converter, 19.4Mb/s to 540Mb/s, VistaLINK® Monitoring ----------278
7707OO-HD Optical Regenerator/Wavelength Converter, 19.4Mb/s to 1.485Gb/s, VistaLINK® Monitoring ----------279

7707OO-2-OC Telecom & Datacom Optical Wavelength Converter ---- 280-281
7707OO-2L-OC Telecom & Datacom Optical Wavelength Converter ---- 280-281
9000EDFA-B,-L & P Erbium Doped Fiber Amplifiers ---- 282

Optical Combiners/Splitters/Multiplexors & Bypass Switchers
7705CWDM Coarse WDM Optical Modules ---- 284-285
7705DS-4 Four Channel Optical Splitter ---- 286
7705DS-8 Eight Channel Optical Splitter ---- 286
7705WDM Wavelength Multiplexor & Splitters ---- 287
7705WDM13/15 1310/1550nm Wavelength Multiplexor & Splitters ---- 287
7705DS Fiber Distribution Monitoring Splitter ---- 287
7705MS Active Fiber Monitoring Splitter ---- 287
7705DWDM Dense WDM Optical Modules ---- 288
9000DWDM DWDM 1RU Optical Mux/De-mux ---- 289
7707BPX 2x1 Optical Bypass Protection Switch ---- 290
SRF1-16-1x2 16-channel 1x2 splitter/combiner in 1RU chassis ---- 291
SRF1-8-1x4 8-channel 1x4 splitter/combiner in 1RU chassis ---- 291
SRF3-64-1x2 64-channel 1x2 splitter/combiner in 3RU chassis ---- 291
SRF3-32-1x4 32-channel 1x4 splitter/combiner in 3RU chassis ---- 291
7702SP2 1x2 Passive Splitter ---- 292
7702SP4 1x4 Passive Splitter ---- 292
7702SP2-LNB 1x2 Passive Splitter, passes LNB power ---- 292
7702SP4-LNB 1x4 Passive Splitter, passes LNB power ---- 292
CWDM/DWDM CWDM & DWDM Wavelength Ordering Information ---- 293

SECTION 6: COMPRESSED DTV PRODUCTS, CODECS & TEST SETS

7780TSM-IP MPEG2/H.264 IP Transport Stream Monitor ---- 294-295
7780TSM-ASI MPEG2/H.264 ASI Transport Stream Monitor ---- 294-295
7780DLY-ASI ASI Delay ---- 296
7772MFD-HD HD JPEG 2000 Decompression CODEC ---- 298
7772MFC-HD HD JPEG 2000 Compression CODEC ---- 299
7772MFX-HD HD JPEG 2000 HD/SD Encoder and decoder ---- 300-301
7772MFX-HD-IP HD JPEG 2000 HD/SD Encoder and decoder with FEC protected IP Outputs ---- 302
7750TG-TS SMPTE 310M/DVB ASI Transport Stream Generator ---- 303

Reference and Test Generators:
7751TG2-HD Dual HD Test Signal Generator with embedded audio ---- 304
7751TG2-CF-HD HD/SD-SDI Test Signal Generator with Trouble Slide ---- 305
7751SRG-HD HD Tri-Level Sync Generator ---- 306
7750TG SDI Test Signal Generator ---- 307
5600MSC Master SPG / Master Clock System ----
5600ACO/ACO2 Automatic Changeover ----

SECTION 7: COMPACT MODULAR - 500 EXPONENT & 400 SERIES

Frames & Control
400 Series
400FR Compact High Density Balanced Audio Distribution Frame ---- 308
400ADA-AUD Analog Audio Distribution Amplifier (1x9) ---- 309
400DA-AESB Balanced AES Audio Distribution Amplifier (1x9) ---- 310
400DA2Q-AESB Dual Balanced AES Audio Distribution Amplifier (2 - 1x4) ---- 311

500 Series
500FR Compact High Density Distribution Frame ---- 312
S501FR Standalone Enclosure ---- 312
500FR-L-A Compact High Density Analog Looping Distribution Frame ---- 313
500FR-L-D Compact High Density Digital Looping Distribution Frame ---- 313
500FC Frame Controller ---- 314
500FC-DA-HD Frame Controller with HD/SD Reclocking DA ---- 315

500 Series with Looping
500DA-L Reclocking Distribution Amplifier for Digital Looping Frame ---- 316
500DA-HD-L Reclocking Distribution Amplifier for Digital Looping Frame ---- 317
500ADA-EQ-L Analog Video Distribution Amplifier with Cable Equalization for Looping Analog Frame ---- 318

HD
500DA-HD HD/SD Reclocking distribution Amplifier (1x8) ---- 319
500DA2Q-HD HD SDI Dual Reclocking Distribution Amplifier (2 - 1x4) ---- 320
500ACO2-HD/SD HD & SD Digital Video Signal Change Over ---- 321
500DCDA-HD HD Downconverter & Distribution Amplifier ---- 322-323

SDI
500DA SDI Reclocking Distribution Amplifier (1x9) ---- 324
500DA2Q Dual SDI Reclocking Distribution Amplifier (2 - 1x4) ---- 325
500DA-3G 3Gb/s SDI Reclocking Distribution Amplifier (1x8) ---- 326
500VMDA SDI Monitoring Reclocking Distribution Amplifier ---- 327

ANALOG - VIDEO

500ADA — Analog Video Distribution Amplifier (1x9) ---- 328
500ADA-EQ — Analog Video Distribution Amplifier with Cable Equalization (1x9) ---- 329

AES & ANALOG AUDIO

500DA-AESB — Balanced AES Audio Distribution Amplifier (1x4) ---- 330
500DA-AESU — Unbalanced AES Audio Distribution Amplifier (1x9) ---- 331
500DA2Q-AESU — Dual Unbalanced AES Audio Distribution Amplifier (2 - 1x4) ---- 332
500AMDA-AESU — AES Monitoring Distribution Amplifier (5 AES out & 2 balanced analog out) ---- 333
500ADA-AUD — Analog Audio Distribution Amplifier (1x4) ---- 334
500ADA-W — Word Clock Distribution Amplifier (1x9) ---- 335
520DARS-W — Unbalanced AES Word Clock Extractor Audio Distribution Amplifier ---- 336
520DD-AESU — Dolby E Decoder ---- 337
520AD4-DD-HD — HD Audio De-embedder & Dolby E Decoder ---- 338-339
520AD4-HD — HD/SD Audio De-embedder ---- 340
520AE4-HD — HD/SD Audio Embedder ---- 341
520AD8-HD — HD/SD Audio De-embedder with 8 AES outputs ---- 342
520AE8-HD — HD/SD Audio Embedder with 8 AES inputs ---- 343

SECTION 8: ROUTERS

HIGH DENSITY CORE ROUTERS

EQX26 — SD/HD/3Gb/s Video Router scaleable up to 576x576 ---- 344-345
EQX16 — SD/HD/3Gb/s Video Router scaleable up to 288x288 ---- 344-345

QUARTZ ROUTERS
XENON ROUTERS

XE4-3232S — Xenon 4RU 32x32 to 64x64 Standard Definition Router ---- 346-347
XE4-3232H — Xenon 4RU 32x32 to 64x64 HD Router ---- 346-347
XE8-3232S — Xenon 8RU 32x32 to 128x128 Serial Video Router ---- 346-347
XE8-3232H — Xenon 8RU 32x32 to 128 x 128 Hi-Def Video Router ---- 346-347

Q-SERIES ROUTERS
LARGE ROUTERS

Q256-SD — SDI Video Router ---- 348
Q6400-N — Analog Video Router ---- 349
Q6400-AA — Analog Audio Router ---- 350-351
Q256-AA/-AES-AA — Digital & Analog Audio Routers (32x32 to 256x256) ---- 352-353

ANALOG & AUDIO ROUTERS
TOPAZ SERIES ROUTERS

QT-1616H — 16 x 16 HD/SD router ---- 354-355
QT-3232H — 32 x 32 HD/SD router ---- 354-355
QT-1616S — 16 x 16 SD router ---- 356-357
QT-3232S — 32 x 32 SD router ---- 356-357
QT-1616N — 16 x 16 Analog Video router ---- 358-359
QT-3232N — 32 x 32 Analog Video router ---- 358-359
QT-1616-AA — 16 x 16 Analog Audio router ---- 360-361
QT-3232-AA — 32 x 32 Analog Audio router ---- 360-361

X-SERIES BYPASS ROUTERS (4x1 to 12x2)

X-0401H — 4x1 HD Router (Quad AES support) ---- 362-363
X-0601H-444 — 6x1 HDTV Dual Link Router with Quad 6x1 AES Audio ---- 364-365
X-1201H — 12X1 HD Router (optional Dual or Quad AES support) ---- 366-367
X-1202H — 12X2 HD Router (optional Dual or Quad AES support) ---- 368-369
X-0401S — 4x1 SDI Video Router ---- 370-371
X-1201S — 12X1 SDI Router (optional AES SoftSwitch™, Quad AES support) ---- 372-373
X-1202S — 12x2 SDI Router (optional AES SoftSwitch™, Quad AES support) ---- 374-375
X-NCP2 — Router Control Panel ---- 376

SMALL ROUTERS

Q1601, 1602, 0802 — HD/SD Analog Video & Audio Routers, 16x1 to 16x2 & 8x2 ---- 378-379
Q16-S & Q32-S — SD Video & Embedded Audio Routers 16x16 to 32x32 ---- 380-381
Q16-N & Q32-N — Analog Video Routers 16x16 to 32x32 ---- 382-383
Q16-AES & Q32-AES — Digital Audio Routers 16x16 to 32x32 ---- 384-385
Q16-AA & Q32-AA — Mono & Stereo Analog Audio Routers 16x40 to 32x32 ---- 386-387

DATA ROUTERS

Q32-PR & Q64-PR — Port-to-Port Data Routers ---- 388
Q16-RR & Q32-RR — Relay Data Routers ---- 389
TR-3200A — Tally Data Router ---- 390

CONTROL PANELS FOR QUARTZ SERIES ROUTERS

CP-1000A — Intelligent Remote Panel, 1RU 16 buttons ---- 391
CP-1600A & 1601A — Remote mini XY panel, BPS ---- 392
CP-1604 — Remote multi-mode panel, 20 button per source ---- 393
CP-2024A — Intelligent Remote Panel, 1RU 24 buttons ---- 394
CP-2032A — Intelligent Remote Panel, 1RU 32 buttons ---- 395
CP-2048A — Intelligent Remote Panel, 1RU 48 buttons ---- 396

CP-2402	Remote Control Panel	397
CP-2402-LP	Local Control Panel	397
CP-3200A	Remote Control Panel with keypad and display	398
CP-3201	Remote Control Panel, multi-mode, 40 button per source	399
CP-3208	Remote Control Panel, eight destination, 32 button per source	400
CP-6400	Remote Display Panel, XY, keypad	401
CP-6401	Remote multi-mode panel, 80 button per source	402
CP-6402,6404 6406,6408	Remote Control Panel, 2,4,6 & 8 destinations	403

SYSTEM CONTROLLERS FOR QUARTZ ROUTERS

SC-500A	System Controller for small systems	404
SC-1000	System Controller, single processor and single power supply	405

QUARTZ PARALLEL INTERFACES

PI-1604A	With four ports supporting 64 buttons/lamps	406
PI-1608A	With eight ports supporting 128 buttons/lamps	406

QUARTZ SERIAL INTERFACES

CI-0001	RS232/422 Serial Interface Card	407
CI-0003	RS232/422 Control Panel Serial Card	407
CI-0004	Multi Q-Link Card	407
SI-0001	Serial Interface Adapter	407
SI-0004	Q-Link Isolator/Repeater	407

RF ROUTERS

XRF1-16x16	1RU 16x16 RF Router	408
XRF1-16x16-LNB	1RU 16x16 RF Router with LNB power supply	408
PKGXRF6L-32x32	32x32 RF Routing System	409-410
PKGXRF6L-32x64	32x64 RF Routing System	409-410
PKGXRF6L-64x64	64x64 RF Routing System	409-410
PKGXRF6L-128x128	128x128 RF Routing System	409-410
PKGXRF6L-512x512	512x512 RF Routing System	409-410

OPTICAL/WIDEBAND ROUTERS

X-3232-EO	Electrical to Optical Router	411
X-1616G	16x16 G-LINK Router, 16 Electrical inputs, 16 Electrical outputs	412
X-1616G-F	16x16 G-LINK Router, 16 Electrical inputs , 16 Fiber outputs	412
X-3232G	32x32 G-LINK Router, 32 Electrical inputs, 32 Electrical outputs	412
X-3216G-F	32x16 G-LINK Router, 32 Electrical inputs, 16 Fiber outputs	412
X-0808-OO	8x8 Optical Router with 8 1310nm optical outputs	413
X-1616-OO	16x16 Optical Router with 16 1310nm optical outputs	413

SECTION 9: CLOSED CAPTIONING, XDS & 1RU MONITORING

Closed Caption and XDS Monitoring

7760CCM-HD	HD-SDI Closed Caption Monitor and CEA-608/CEA-708 Translator	414
CaptionWare	Closed Caption and XDS Configuration Utility	415
HD9084	HD/SD-SDI DTV Caption Encoder	416
8084	SDI Closed Caption Encoder	417
8084AD	Analog & SD/SDI Closed Caption Encoder	417
8083XDS-AD	Analog & SD/SDI XDS Encoder	418
3410	Multivert (10 SDI to Analog Monitoring Converter)	419
ProCAP	Offline Closed Caption Authoring System	420-421

SECTION 10: SPGs, TIME CODE & CLOCK DISPLAYS

SLAVE CLOCKS

1200DD/1201DD&-G	Data Digital Display & Green LED	422
1212	12" Diameter Analog Clock Display	423
1216	16" Diameter Analog Clock Display	423
1275A	9" Digital Clock Display	424

ANALOG TIME CODE

5010-GPSII	Time Code Generator with GPSII	425
5010-VITC-GPSII	VITC Time Code Generator with GPSII	425
5010	LTC Time Code Gen/Reader/Character Inserter	426-427
5010-24Fps	LTC Time Code Gen/Reader Character Inserter (with 24Fps)	426-427
5010-VITC	LTC and VITC Time Code Gen/Reader/Character Inserter	426-427
5010-VITC-24Fps	LTC and VITC Time Code Gen/Reader/Character Inserter (with 24Fps)	426-427
5300	Time Code Analyzer	428
5950	VITC/LTC Time Code Reader/Character Inserter	429

MASTER SPG, MASTER CLOCK & TEST SET & ACO SYSTEM

5600MSC	Master SPG / Master Clock System	430-431
5600ACO/ACO2	Automatic Changeover	432-433
500ACO2-HD/SD	Dual HD & SD Digital Video Signal Change Over	321

DIGITAL TIME CODE

8010TM	SDI Time Code Generator/Reader with Character Inserter	434
8010TM-IRIG	SDI Time Code Master with IRIG Reader	435
HD9010TM	HD Time Code Generator/Reader	436-437
HD9010TM-IRIG	HD Time Code Master with IRIG Reader	438-439

SECTION 11: MINIATURE SERIES/MOBILE

2405EO	SDI Miniature Optical Transmitter, 19.4Mb/s and 143-540Mb/s	440
2405OE	SDI Miniature Optical Receiver, 19.4Mb/s and 143-540Mb/s	441
2405EO-HD	HD Miniature Optical Transmitter, 19.4Mb/s - 1.5Gb/s	442
2405OE-HD	HD Miniature Optical Receiver, 19.4Mb/s - 1.5Gb/s	443
2407DVIT	DVI/KVM Miniature Fiber Receiver	444-445
2407DVIR	DVI/KVM Miniature Fiber Transmitter	446-447
2405LTA	L-Band Weatherproof Fiber Transmitter	448
2407LTA	L-Band Weatherproof Fiber Transmitter with AGC	448
2400PSUA-4	Outdoor, quad output power supply for 2407LTA series	449
2407RGBT	RGBHV/DVI/KVM Miniature Fiber Transmitter	450-451
2407RGBR	RGBHV/DVI/KVM Miniature Fiber Receiver	452-453
2430DAC-HD	HD Miniature D to A Converter: YPrPb/RGB/VGA via High Density DB	454
2430GDAC	GLink™ Digital to Analog Converter	455
2430GDAC-WARP	GLink™ Digital to Analog Converter	455
2410MD-HSN	HD Miniature Monitoring Downconverter with 24sF processing	456
7700PCO	Power Changeover Unit	457
PKG7700MFOS	Mobile Fiber Optic System	458-459
PKG7700MFOS-2	Mobile Fiber Optic System Dual	458-459

SECTION 12: PRODUCTION POST PRODUCTION & TELECINE TOOLS

PRODUCTION POST PRODUCTION

5010-24fPS	LTC Time Code Gen/Reader Character Inserter (with 24Fps)	426-427
7751SRG-HD	HD Tri-Level Sync Generator	306
ECAS-HD	Fiber Optic Enabled Camera Adapter System	460-461
7732DVP-HD	HD Dual Link Processor	462
7732DVP-3D-HD	HD 3D HD Dual Link Processor	463
HD9690	HD Graticule Generator	464-465
HD9690-444	4:4:4 Graticule Generator	464-465
9590	SDI Digital Graticule Generator	466
7732PFT-HD	HDTV Progressive Format Translator	467

KEYKODE READERS

5550	Universal Decoder	468-469
5550/KR-16/35	5550 Decoder with KR16/35 head & 10ft cable	468-469
5550/UV-3	5550 Decoder with UV-3 Head & 20 ft. cable	468-469
5550/UVT-3	5550 Decoder with UVT-3 (Touchless) Head & 20 ft. cable	468-469

AFTERBURNER & FILM FOOTAGE ENCODERS

HDSD9155Q	HD/SD Afterburner	470-471
HDSD9045TR	HD/SD 4:2:2 Film Footage Encoder	472-473
HD9045PVE	4:4:4 HD Production VANC Encoder including KeyLog™ Tracker	474

POST PRODUCTION ACCESSORIES

KeyLog Tracker	Telecine Logging & Configuration Mgmt Tool	475
Index		476-485
Warranty		486

QMC

MASTER CONTROL & BRANDING

The QMC series offers intelligent solutions to the challenges of Master Control in today's ever-changing transmission environment.

QMC-MCS, QMC-2 & QMG

Master Control & Branding

Master Control is the heart of any broadcast facility, and demands for reliability, serviceability, and signal protection are essential. Equally essential is a Master Control that can be expanded to provide for future growth as facilities migrate from analog to SD to HD. Many broadcasters look at master control as a major long-term investment.

The Quartz QMC has been designed to meet the current master control needs of your facility, with the ability to meet future needs. The QMC-MCS and QMC-2 are platforms that provide cost-effective solutions for facilities that are converting to SD and HD. The hardware platforms run solid field-proven software to form a foundation that meets the latest playout and branding needs. Among the other major features the two platforms provide are: bypass and emergency inputs, hot-swappable hardware, and redundant power supplies. This allows for a reliable system that provides programming 24/7 year round.

Evertz® Master Control Solution: The QMC offers a unique approach to Master Control with SD and HD channels with a number of options and a broad selection of configurable control panels. Master Control systems can be assembled to meet any need and size as systems scale from single channel up to complex multi-channel installations. QMC allows this power to be easily controlled under automation or manual control. The QMC intelligent LCD push-button control panels give operators high flexibility in panel layout and function. A QMC system comprises of an upstream router, feeding a number of processing channels.

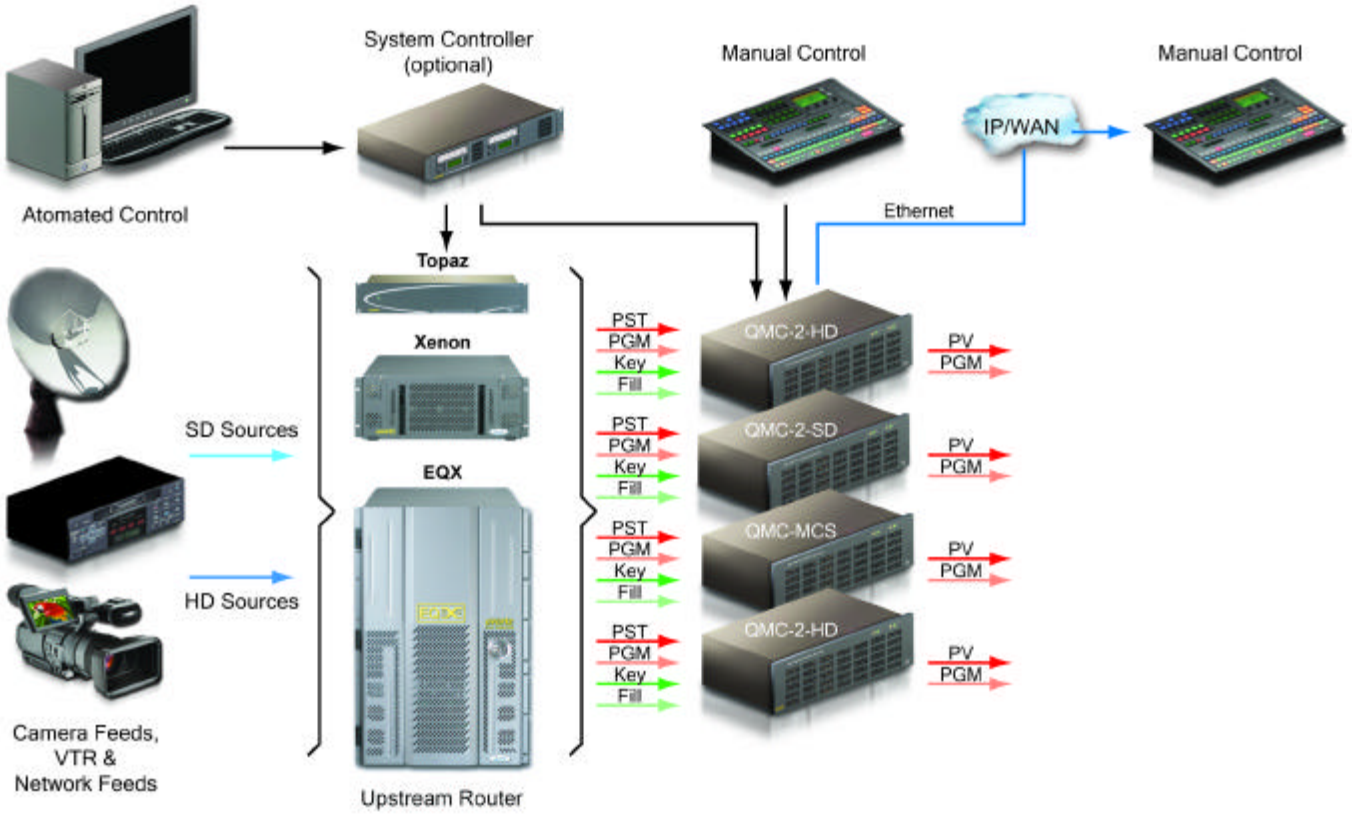

The QMC Platforms

There are two different channel types that are available which can be used in any combination. They are the QMC-MCS and QMC-2.

QMC-MCS: Each QMC-MCS provides a complete program channel and a full "look-a-head" preview of the next transition. Up to four linear key levels may be fitted, one fed from an optional internal Logo Store and the others from external key and fill sources. An internal dual-channel DVE may also be added with independent preview and program channels. Embedded and AES audio I/O is standard, with two independent stereo voice-overs that can be mapped to any or all of the output channels. Analog audio I/Os can be added as an option. The QMC-MCS frame is 3RU and can hold an additional board which provides a second independent channel.

QMC-2: QMC-2 supports high definition as well as standard definition video formats. This allows HD channels to be fully integrated into a QMC system. Each QMC-2 processes a complete 1.5Gb/s High Definition preset and program channel and provides a full "look-a-head" preview of the next transition. The QMC-2 also provides an auxiliary output for "Clean feeds". Multiple standards are supported, including 720p and 1080i. The QMC-2 provides support for 16 channels of embedded audio on the PROGRAM, PRESET and EMERGENCY inputs. Also provides for discrete AES inputs and AES outputs. The QMC-2 frame is also 3RU and can hold an additional board to add a complete second HD/SD channel.

QMC Control

Manual Control: Quartz designed the QMC system for ease of use in live and automated environments. The range of QMC control panels has been optimized for size and ease of use in single and multi-channel playout applications. All QMC panels use LCD buttons, providing a dynamic control environment. Every button is user-configurable. The panel layout and operation can be configured to suit individual needs whereby many aspects of the QMC operation are user-definable. The range of panels is from 1RU to full size.

Automated Control: Each QMC channel can connect to an automation system through a dedicated serial port located on every channel. This gives low latency and maximum protection against on-air problems. Crosspoint control of upstream routers is handled directly by the QMC so only a single port on the automation system is required for each active channel.

Key Operational Features

Static/Animated Logos: The Logo store for the QMC is optional. It allows a station, channel or program identification to be keyed over the Program output. Logos can be transitioned onto the Program output at any time using any of the standard video transitions. Multiple logos are stored within the QMC and can be called up from an automation system or from the control panel.

Audio & Voice-Overs: The QMC has powerful and flexible audio capabilities. With standard AES, 16 channels of embedded and optional analog audio I/O (QMC-MCS only), it is easy to integrate into any station. Audio level adjustments may be made from the panel at any time and stored on a source-by-source basis. Internal AES shufflers allow routing from any input to any output. Built-in sample rate converters allow any mix of 44.1 and 48kHz sources to be used and silently switched on air.

The QMC can perform two independent stereo voice-overs, each mappable to any or all output channels. Full 'pre-hear' allows level and voice-over ratio to be set prior to going on air. Voice-overs can be taken to air combined with another transition or independently.

Keyers: Up to three key layers may be fitted to all QMC models. One keyer is standard while two additional keyers can be optionally added. They have a full range of user adjustments stored and recalled on a source-by-source basis. Keyers may be taken on and off air with other key levels or independently, and priority can be set.

Video/Audio Transitions: The standard QMC configuration includes a number of video & audio transitions such as V-Fades, Mixes, and Split audio/video as well as optional wipe transitions. These transitions can be controlled via the QMC control panel or the automation system and can be customized at any time.

DVE: The DVE option provides live and dynamic visual effects, such as picture sizing and positioning, and is fully integrated within the QMC. The DVE may be controlled manually or from the automation system and is independent of the keys and logo (bug) layers.

QMC-2 Block Diagram

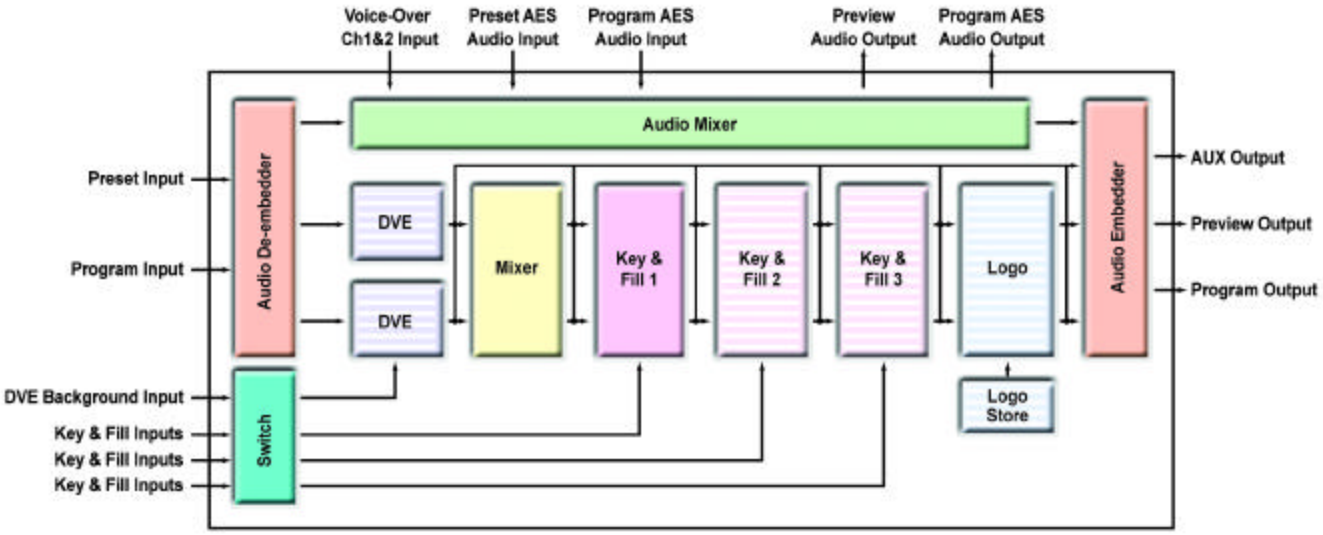

QMG - Enhanced Branding Solution for Master Control

The Quartz Media Graphics option enhances the on-air branding capabilities of the QMC-2. It adds a complete logo and media insertion package to the Master Control path, which will simultaneously key an additional 16 layers of static or animated "bugs" over the HD or SD video signal. It also offers the options for the use of audio chimes/snipes, text teasers, and text crawls. The QMG occupies one slot in the QMC-2 3RU frame.

The QMG has been designed to manage and store multiple static/animated logos and audio clips. The size of each logo is variable and range from 1/25th to full screen. Various media formats (such as Tiffs, TGA, Bitmaps, and Wave files) can be imported into the Evertz® Overture media software and transferred to the QMG via Ethernet. The position of the logo, fade rates, clip association and animation rates can be controlled through the various QMC control panels.

Media is stored into flash memory that can be quickly recalled by the various QMC control panels or automation. With the removable compact flash option you can have access up to 16GB of on-line media storage space. The Network Attached Storage option utilizes the Gigabit Ethernet of the QMG to connect a media server device. This allows the QMG to access virtually unlimited archived media storage.

The QMG can be used in two modes: Key/Fill or Program/Preview. In the Key/Fill mode, the QMG generates a Key and Fill signal that is connected to the QMC-2. In the Program/Preview mode, the QMG is downstream of the QMC-2. The on-board preview allows users to cue their logos for position and content verification prior to going "On Air". Also, the Program/Preview mode allows for an optional 2 channel 2D DVE to inserted in the processing path to provide two programs over a background effect.

QMG Operating Modes

Key/Fill/Preview

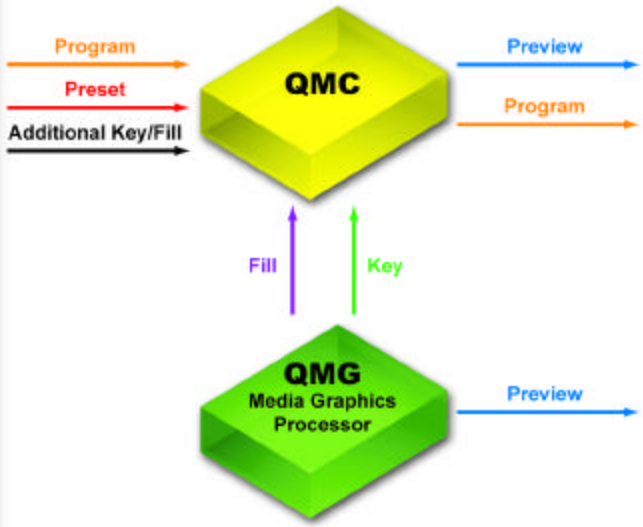

Program/Preview with DSK

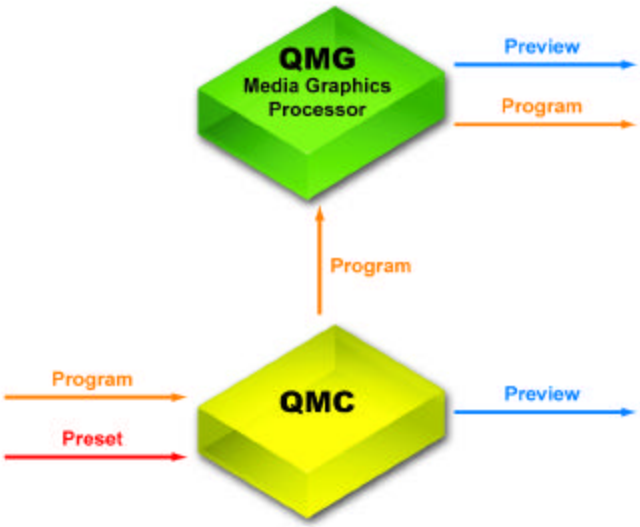

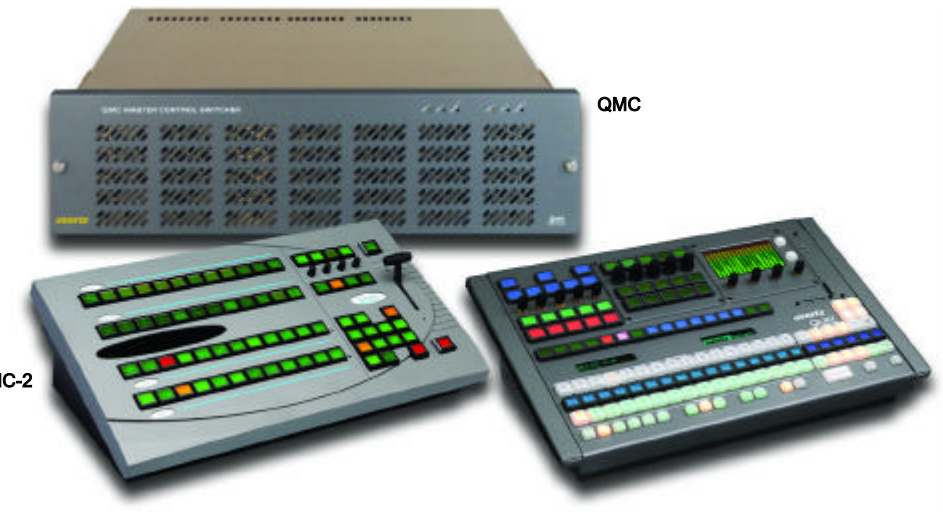

The QMC range is a family of related products, offering intelligent solutions to the challenges of Master Control in today's ever-changing transmission environments.

Master Control is the heart of a broadcast facility. Traditional demands for reliability, signal protection, and serviceability continue to be essential. QMC offers bypass and emergency inputs, hot-swap boards, power supplies and runs solid field-proven software. QMC builds on this foundation to meet the latest playout and branding needs. Multiple keyers, internal DVEs, built-in Logo Store, a wide range of transitions and full audio capabilities.

QMC offers a unique approach to Master Control. With SD and HD channels, many options, and a broad selection of configurable control panels, Master Control systems can be assembled to meet any need and any size as systems can scale from a single channel, up to complex multi-channel installations. QMC allows all of this power to be easily controlled under automation, or with familiar manual control panels. Quartz's use of intelligent control panels with LCD pushbuttons gives operators a high level of flexibility in panel layout and function.

QMC Systems comprise an upstream router feeding a number of processing channels. Two different channel types are available and these may be used in any combination.

Features & Benefits

QMC-MCS:
Each QMC-MCS provides a complete program channel and a full "lookahead" preview of the next transition. Up to four linear key levels may be fitted, one fed from an optional internal Logo Store and the others fed from external key and fill sources. An internal dual-channel DVE may also be added with independent preview and program channels. Embedded and AES audio I/O is standard, with two independent stereo voice-overs that can be mapped to any or all of the output channels. Analog audio I/O's can be added as an option. The QMC-MCS frame is 3RU and can hold an additional board which provides a second independent channel.

QMC-2:
QMC-2 supports high definition as well as standard definition video formats. This allows HD channels to be fully integrated into a QMC system. Each QMC-2 processes a complete 1.5Gb/s High Definition preset and program channel and provides a full "lookahead" preview of the next transition. Multiple standards are supported, including 720p and 1080i. With similar video capabilities to the QMC-MCS, the QMC-2 model also has enhanced audio, handling 16 channels as standard. QMC-2 also supports Dolby E signals, with the option of fitting Internal Dolby E decoders. The QMC-2 frame is also 3RU and can hold an additional board to add a complete second HD/SD channel.

QMG:
The QMG utlizes the Master Control features of the QMC and adds a complete Logo and Audio Insertion package that will key one, or many, static/animated "bugs" over a HD or SD video signal. It will also "Duck" insert preformatted audio clips. Media created in BMP, Tiff, TGA or Wave file formats can be imported into the Evertz *overture* software and transferred to the QMG via Ethernet. Media is stored in flash memory and can be quickly recalled. With the removable Compact Flash option you can have access of up to 16Gb/s of on-line media storage space and virtually unlimited archived media storage.

The QMG has been designed to manage and store multiple logos. The size of each logo is variable and ranges from 1/25th to full screen. The position of the logo, fade rates, clip association and animation rates are user controllable. Up to 16 logos can be keyed simultaneously with independent fade control for each logo. The onboard preview allows you to cue your logos for position and content verification prior to going "On Air".

Key Operational Features
Transitions
The standard QMC configuration includes a number of video and audio transitions such as Mixes, V-Fades and Split audio/video as well as optional wipe transitions. The video and audio transitions can be controlled via the QMC control panel or the automation system and can be customized at any time.

Keyers
Up to three key layers maybe fitted to all QMC models. One keyer is standard while two additional keyers can be optionally added. They have a full range of user adjustments which are stored and recalled on a source-by-source basis. Keyers may be taken on and off air with other key levels or independently.

DVE
The DVE option provides live and dynamic visual effects, such as picture sizing and positioning, and is fully integrated within the QMC. The DVE may be controlled manually or from the automation system and is independent of the keys and logo (bug) layers.

Logo
The Logo store for the QMC is optional. It allows a station, channel or program ident to be keyed over the Program output. Logos can be transitioned onto the program output at any time using any of the standard video transitions. Multiple logos are stored within the QMC and can be called up from an automation system or from the control panel.

Control
Manual Control
Quartz designed the QMC system for ease of use in live and automated environments. The range of QMC control panels has been optimized for size and ease of use in single and multi-channel playout applications.

All QMC panels use LCD buttons, providing a dynamic control environment. Every button is user configurable. The panel layout and operation can be configured to suit individual needs with many aspects of the QMC operation user definable.

Automated Control
Each QMC channel can connect to an automation system through a dedicated serial port located on every channel. This gives low latency and maximum protection against on air problems. Crosspoint control of upstream routers is handled directly by the QMC so only a single port on the automation system is required for each active channel.

Specifications for QMC-2 HD/SD Master Control Switcher

Video Connections:
Inputs:
7 standard: Program, Preset, Keyer-1 Fill, Keyer-1 Key Emergency, Program Bypass, Auxiliary Bypass
5 optional: Keyer-2 Fill, Keyer-2 Key Keyer-3 Fill, Keyer-3 Key DVE Background
Outputs:
3 standard (dual): Program, Preview, Auxiliary

Standard Definition (QMC-2-SD):
Video Inputs (apart from bypass inputs)
Signals supported: SMPTE 259M
Signal Level: 800mV p-p nominal
Impedance: 75Ω terminating
Return Loss: 5 - 270MHz: 15dB typical
Cable equalization: Belden 8281
BBC PSF1/2: 250m min
BBC PSF1/3: 150m min
Timing window: ± ½ line w.r.t. Reference input
Connectors: BNC, 75Ω terminating

Video Outputs:
Signal Level: 800mV p-p ± 10%
Impedance: 75Ω terminating
Return Loss: 5 - 270MHz: 15dB typical
D.C. offset: 0 ± 0.5V
Rise/fall times: <0.4ns
Output jitter: 0.2UI p-p
Connectors: BNC, 75Ω

Switching Reference:
Reference input: Analog 525/625
Signal level: 1V p-p ± 3dB
Connector: BNC, 75Ω with looping connector

High Definition (QMC-2-HD):
Video Inputs (apart from bypass)
Signals supported: SMPTE 292M-1998
Signal Level: 800mV p-p nominal
Impedance: 75Ω terminating
Return Loss: 5 - 1485MHz: 15dB typical
Cable equalization: Belden 1694AA: 90m min
Timing window: ± ½ line w.r.t. Reference input
Connectors: BNC, 75Ω terminating

Video Outputs:
Signal Level: 800mV p-p ± 10%
Impedance: 75Ω terminating
Return Loss: 5 - 1485MHz: 15dB typical
DC offset: 0 ± 0.5V
Connectors: BNC, 75Ω
Rise/fall times: <0.270ns
Output jitter: 0.2UI p-p at 100kHz, 1UI at 10Hz

Switching Reference:
Reference input (HD/SD): Analog 525/625 or Tri-level 50/59.94/60Hz
Signal level: 1V p-p ± 3dB
Connector: BNC, 75Ω with looping connector

Audio Connections (Balanced frame):
Inputs:
18 standard: Program (A1/A2, A3/A4, A5/A6, A7/A8)
Preset (A1/A2, A3/A4, A5/A6, A7/A8)
Emergency (A1/A2, A3/A4, A5/A6, A7/A8)
Voice Over-1 (A1/A2, A3/A4)
Voice Over-2 (A1/A2, A3/A4)
Program Bypass (A1/A2, A3/A4)
Outputs:
8 standard: Program (A1/A2, A3/A4, A5/A6, A7/A8)
Preview (A1/A2, A3/A4, A5/A6, A7/A8)

Audio Inputs:
Signals supported: AES-3
Signal Frequency: 32 - 96kHz
Audio Resolution: 24bit
Signal Level: 200mV - 10V p-p
Impedance: 110Ω terminating
Return Loss: 0.1 - 6MHz: >20dB
Connectors: D50 female

Audio Outputs:
Signal Level: 2V - 7V, nominally 5V p-p ± 10%
Signal Frequency: 48kHz
Impedance: 110Ω
Return Loss: 0.1 - 6MHz: 20dB typical
Intrinsic Jitter: <.025UI
Connectors: D50 female

Audio Connections (Unbalanced frame):
Inputs:
10 Standard: Program (A1/A2, A3/A4), Preset (A1/A2, A3/A4), Emergency (A1/A2, A3/A4)
Voice Over-1 (A1/A2)
Voice Over-2 (A1/A2)
Program Bypass (A1/A2, A3/A4)
Outputs:
8 Standard: Program (A1/A2, A3/A4)
Preview (A1/A2, A3/A4)
Program (A1/A2, A3/A4)

Audio Inputs:
Signals supported: AES-3id, SMPTE 276M unbalanced
Signal Frequency: 32 - 96kHz
Audio Resolution: 24bit
Signal Level: 320mV - 1.2V p-p
Impedance: 75Ω terminating
Return Loss: 0.1 - 6MHz: >15dB
Connectors: BNC, 75ohm

Audio Outputs:
Signal Level: 1V p-p ± 20%
Signal Frequency: 48kHz
Impedance: 75Ω
Return Loss: 0.1 - 6MHz: 15dB typical
Intrinsic Jitter: <.025UI
Connectors: BNC

Metadata Connections (with Dolby-E decoder option):
Serial: 2 x 8 pin RJ45 RS232/ RS422 link selectable

Control:
Q-Link: 2 x BNC with loop-through connections, 75Ω (max length 500m)
Serial: 1x D9 female, 3 x 8 pin RJ45 RS232/RS422 link selectable
Ethernet 10BaseT: 8 pin RJ45
Tally: 1x D25 female
Inputs: 7 or 8 TTL inputs, <0.8V for logic low, >3.5V for logic high
Outputs: 7 or 8 normally open contact pairs Contact rating 24A @0.5A D.C. resistive load
Bypass control and Alarm:
4 way Klippon, mating connector supplied

Specifications for QMC-MCS Master Control Switcher

Video Connections Inputs:
6 standard: Program, Preset, Keyer-1 Fill, Keyer-1 Key Emergency, Program Bypass
4 optional: Keyer-2 Fill, Keyer-2 Key, Keyer-3 Fill Keyer-3 Key

Video Connections Outputs:
3 standard (dual): Program, Preview, Auxiliary

Standard Definition Video Inputs (apart from bypass input):
Signals supported: SMPTE 259M
Signal Level: 800mV p-p nominal
Impedance: 75Ω, terminating
Return Loss: 5 - 270MHz: 15dB typical
Cable equalization: Belden 8281
BBC PSF1/2: 250m min
BBC PSF1/3: 150m min
Timing window: ± ½ line w.r.t. Reference input
Connectors: BNC, 75Ω, terminating

Video Outputs:
Signal Level: 800mV p-p ± 10%
Impedance: 75Ω, terminating
Return Loss: 5 - 270MHz: 15dB typical
D.C. offset: 0 ± 0.5V
Rise/fall times: <0.4ns
Output jitter: 0.2UI p-p
Connectors: BNC, 75Ω

Switching Reference:
Reference input: Digital - SDI 525/625
Signal level: 800m V p-p nominal
Connector: BNC, 75Ω, terminating

Audio Connections (Balanced):
Inputs: Program (A1/2, A3/4)
Preset (A1/A2, A3/A4)
Emergency (A1/A2, A3/A4)
Voice Over-1 (A1/A2)
Voice Over-2 (A1/A2)
Program Bypass (A1/A2, A3/A4)
Outputs: Program (A1/A2, A3/A4)
Preview (A1/A2, A3/A4)

Audio Inputs:
Signals supported: AES-3
Signal Frequency: 32 - 48kHz
Audio Resolution: 20bit
Signal Level: 200mV - 10V p-p
Impedance: 110Ω, terminating
Return Loss: 0.1 - 6MHz: >20dB
Connectors: D50 female

Audio Outputs:
Signal Level: 2V - 7V, nominally 5V p-p ± 10%
Signal Frequency: 48kHz
Impedance: 110Ω,
Return Loss: 0.1 - 6MHz
Intrinsic Jitter: <.025UI
Connectors: D50 female

Control:
Q-Link: 2 x BNC with loop-through connections, 75Ω, (max length 500m)
Serial: 1x D9 female, 3 x 8 pin RJ45 RS232/RS422 link selectable
Tally: 1x D25 female
Inputs: 7 or 8 TTL inputs <0.8V for logic low >3.5V for logic high
Outputs: 7 or 8 normally open contact pairs Contact rating 24A @0.5A D.C. resistive load
Bypass control and Alarm: 4 way Klippon, mating connector supplied

Physical:
Height: 3RU, 133mm
Width: 19" Rack mount
Depth: 485mm
Weight:
Single channel: 10Kg
Dual channel: 12Kg
Operating Temp: 0 - 40°C
Ventilation: Fan cooled, air drawn from front, exhaust at rear and sides

Electrical:
Supply: 90-264 VAC universal 50/60Hz
Power: Single Channel 60W
Dual Channel 120W
Backup: Optional
EMC: Meets CE requirements

Ordering Information

QMC-MCS	Master Control Switcher, Single Channel Switcher/mixer

QMC-MCS Ordering Options

+KEY	Additional Key Layer - Up to two additional key layers may be added to each switcher/mixer channel unless the DVE is fitted - then only one additional key layer may be added
+AA	Analog Audio Option - Adds four channel analog audio PGM & PST plus stereo voice-over inputs, plus four channel PGM & PV outputs
+LG	Logo Option - Stores logos and keys onto PGM output
+DVE	DVE Option - Dual channel 2D DVE including colored borders with hard or soft edges. Includes two input simms

QMC-2-SD-U	SD Master Control Switcher Single Channel SDI Switcher/mixer unbalanced with 3RU frame and one power supply
QMC-2-SD-B	SD Master Control Switcher Single Channel SDI Switcher/mixer balanced with 3RU frame and one power supply
QMC-2-SD-CH2	Additional Switcher/Mixer Channel (SD)
QMC-2-HD-U	HD Master Control Switcher Single Channel HD SDI switcher/mixer unbalanced with 3RU frame and one power supply
QMC-2-HD-B	HD Master Control Switcher Single Channel HD SDI switcher/mixer balanced AES audio with 3RU frame and one power supply
QMC-2-HD-CH2	Additional Switcher/Mixer Channel (HD)

QMC-2 Ordering Options

+AES8	Upgrade to 8 mono AES audio I/Os - Only available for the balanced QMC-2 frame (QMC-2-SD-B or QMC-2-HD-B)
+DVE	DVE Option for QMC-2-SD - Includes Background Option
+KEY1	Additional Key Layer - Add a 2nd level of Key & Fill
+KEY2	2 Additional Key Layers - Adds a 2nd & 3rd level of Key & Fill
+LG	Internal Logo Store & Keyer - Stores logos and keys onto PGM output. Includes 256MB Media Store. Note: Maximum 2 logos per channel
+DD1	Dolby E Decoder Option (Emergency Input) Decodes an incoming Dolby E signal on the emergency input. This is a single Dolby E Decoder for the QMC-2 channel+DD2 Dolby E Decoder Option (Program & Preview Pair) Decodes an incoming Dolby E signal. Up to two pairs can be fitted to each QMC-2 channel

General Ordering Options

*Note: +KEY1 cannot be ordered with +KEY2 option

+2PS	Power Supply - QMC Master Control Switcher. May be used as redundant power supply or as a spare.
+WP	Wipe Option - Horizontal, vertical and diagonal wipes with colored borders with hard or soft edges
QMC-DCP	QMC Control Panel

QMG

Quartz Media Graphics

The Quartz Media Graphics option enhances the on-air branding capabilities of the QMC-2. It adds a complete logo and media insertion package to the Master Control path, which will simultaneously key an additional 16 layers of static or animated "bugs" over the HD or SD video signal. It also offers the options for the use of audio chimes/snipes, text teasers, and text crawls.

The QMG has been designed to manage and store multiple static/animated logos and audio clips. The size of each logo is variable and range from 1/25th to full screen. Various media formats (such as Tiffs, TGA, Bitmaps, and Wave files) can be imported into the Evertz' overture media software and transferred to the QMG via Ethernet. The position of the logo, fade rates, clip association and animation rates can be controlled through the various QMC control panels.

Media is stored into flash memory that can be quickly recalled by the various QMC control panels or automation. With the removable compact flash option you can have access up to 16 GB of on-line media storage space. The Network Attached Storage option utilizes the Gigabit Ethernet of the QMG to connect a media server device. This allows the QMG to access virtually unlimited archived media storage.

The QMG can be used in two modes: Key/Fill or Program/Preview. In the Key/Fill mode, the QMG generates a Key and Fill signal that is connected to the QMC-2. In the Program/Preview mode, the QMG is downstream of the QMC-2. The onboard preview allows users to cue their logos for position and content verification prior to going "On Air". Also, the Program/Preview mode allows for an optional 2 channel 2D DVE to inserted in the processing path to provide two programs over a background effect.

The QMG occupies one slot in the 3RU QMC-2 frame.

Features & Benefits

- Stores and inserts static and animated logos or media clips
- Multiple simultaneous logos can be keyed directly onto the HD or SD video signal
- Multi-layer keying
- Supports 1080i, 720p, 525, and 625 formats
- Full 12 bit linear video keyer with logo fade-in and fade-out processing
- Independent control of logo position, transparency and offset
- Independent control of fade in and fade out of static logos
- Input bypass relays for power failure protection
- Automatic equalization up to 100m @ 1.5 Gb/s (Belden 1694A or equivalent)
- Program and Preview outputs
- Reference to input video or colour black
- Gigabit Ethernet interface
- Manage logos from a standard PC using Ethernet and Overture software
- Standard 256MB compact flash storage with 512 MB playout cache
- Optional +TXT feature to support crawls and text teasers/snipes
- Optional +NAS feature for Network Attached Storage support
- Optional +DVE for 2D DVE effects
- Optional 2GB, 4GB or 8GB internal compact flash storage
- Optional additional removable flash memory of 2GB, 4GB or 8GB
- Option to increase playout cache to 2GB, 4GB or 8GB DRAM
- Occupies one slot in 3RU QMC-2 frame

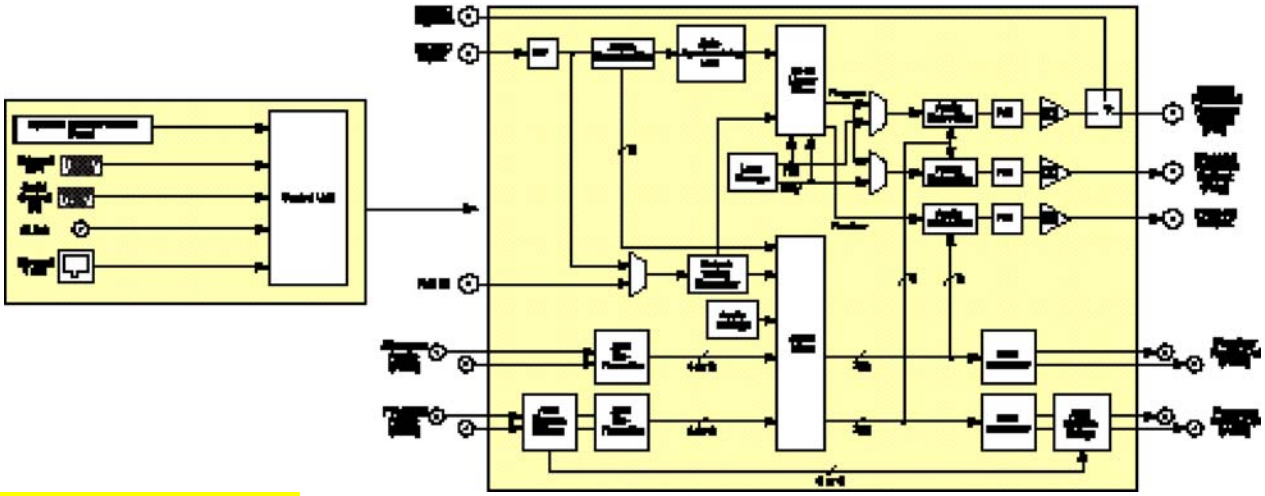

Specifications

Video Connections:
Outputs:
2 standard (dual): Program (Key), Preview (Fill)

Video Inputs (apart from bypass inputs)
Number of Inputs: 1 Program
Input Standard: SMPTE 259M or 292M
Signal Level: 800mV p-p nominal
Impedance: 75Ω terminating
Return Loss:
5 - 270MHz: 15dB typical
5 - 1.485GHz: 15dB typical
Cable equalization: Belden 8281 up to 250m (270Mb/s)
Belden 1694AA: Up to 90m (1.5 Gb/s)
Connectors: BNC 75Ω terminating

Video Outputs:
Number of Outputs: 1 Program (Key), 1 Preview (Fill)
Output Standard: SMPTE 259M or 292M
Signal Level: 800mV p-p ± 10%
Impedance: 75Ω terminating
Return Loss:
5 - 270MHz: 15dB typical
5 - 1.485GHz: 15dB typical
D.C. offset: 0 ± 0.5V
Rise/fall times: <0.4ns
Output jitter: 0.2UI p-p
Connectors: BNC, 75

Reference Input:
Standard: Analog Black
Signal level: 1V p-p ± 3dB
Connector: BNC, 75Ω with looping connector

Audio Connections:
Audio Inputs:
Input Standard: SMPTE 276M, AES-3
Quantity: 4 Voice Over, 8 Program
Signal Frequency: 32 - 96kHz
Audio Resolution: 24bit
Signal Level: 200mV - 10V p-p
Impedance: 110Ω terminating (balanced QMC-2 frame)
75Ω terminating (unbalanced QMC-2 frame)
Return Loss: 0.1 - 6MHz: >20dB
Connectors: D50 female (balanced QMC-2 frame)
BNC, 75Ω (unbalanced QMC-2 frame)

Control:
Serial: 1x D9 female, 3 x 8 pin RJ45
RS232/RS422 link selectable
Ethernet 1000BT: 8 pin RJ45
Tally: 1x D25 female

Physical:
Operating Temperature: 0 - 40°C

Ordering Information

QMG	Quartz Media Graphics

QMG Ordering Options

+E	EAS Crawl Support (NA only)
+TP	Air Temperature Probe
+TXT	HD/SD Texting Features including crawls, text teasers, etc.
+NAS	Network Attached Server
+DVE	2D DVE Option (includes background input)

QMG Memory Options

	Basic Unit is equipped with 512Mb internal playout memory and 256Mb internal compact flash.
+MEM2G	Memory Upgrade Kit: includes internal playout memory of 2Gb, internal compact flash of 2Gb, and external compact flash of 2Gb
+MEM4G	Memory Upgrade Kit: includes internal playout memory of 4Gb, internal compact flash of 4Gb, and external compact flash of 4Gb

* Note: Other memory options are available. Contact factory for more information.

The QMC-DCP control panel features assignable control buttons, using a combination of fixed and dynamic LCD buttons. The LCD buttons are capable of displaying multiple lines of text or graphics. The panel features 98 buttons, and 5 shaft encoders, as well as two pluggable modules for further customization.

Preset and program bus select buttons use a quiet tactile button and a shared LCD display for source labelling.

The first optional module contains15 buttons and 5 shaft encoders, and offers an extension to the configurable buttons of the main panel.

The second optional module contains an LCD display, ideal for logo previews.

The third optional module contains T-bar and fixed buttons ideal for selecting transition types.

The panel is designed for use on a desktop, in a console, mounted in a rack, or on a sliding tray in a rack.

Features & Benefits

- Flexible feature or menu driven configurations providing quick and simple access
- Easily reconfigured for dynamically changing environments
- Each LCD display can display up to 3 lines of text or a graphic
- Each LCD display backlight is full RGB colour capable with intensity control
- Fully assignable and programmable operation
- Button per source selection with Page mode next and last buttons to select more sources
- Panel lock button to protect against unauthorized or accidental selection
- 8 tally ins
- 8 tally outs

Specifications

Control

Ethernet	RJ45, 10/100/1000 Mbit/s, redundant
Q-link to remote panels	75Ω video cable 500m max. length
Serial RS232/RS422	DB9 female
Tally	DB25 female

Ordering Information

QMC-DCP	QMC Desk Control Panel

Ordering Options

+ABP	Additional Button Panel
+LCD	4.3" LCD Display
+TBAR	Additional T-Bar for fader arm applications

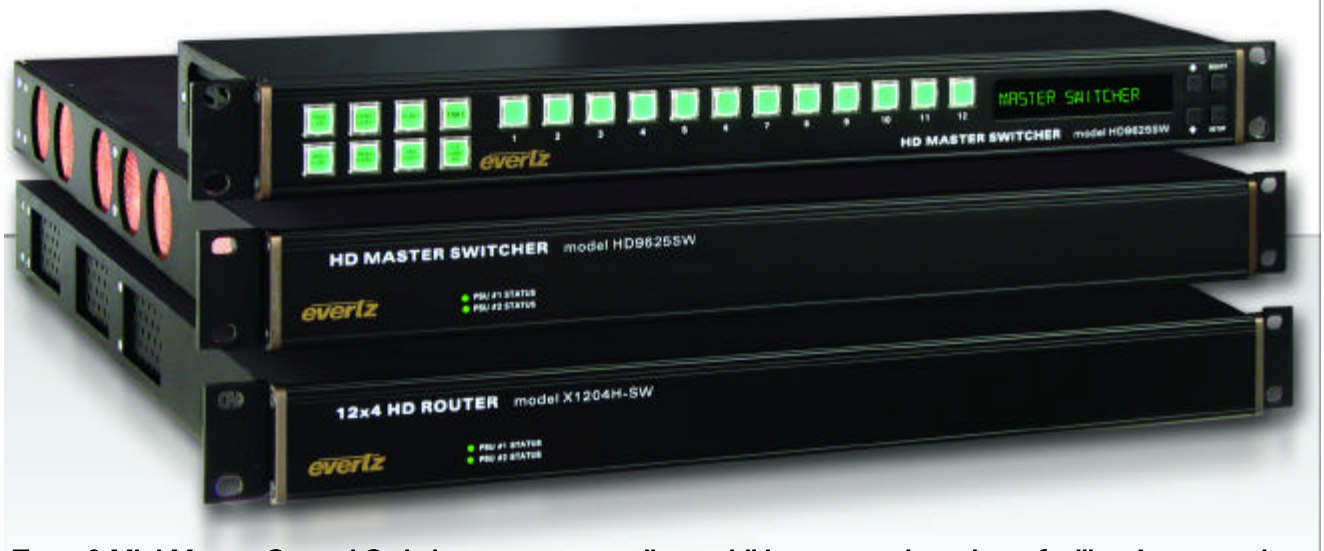

Evertz® Mini Master Control Switchers are an excellent addition to your broadcast facility. As you reduce cost and increase revenue, it is important to use the same rack space for more distribution channels. These 2RU units offer ample features for the most demanding environments in a very compact solution. Full automation support from many vendors using the industry standard M2100 automation protocol guarantees easy installation and full integration within your existing infrastructure.

User-Interfaces & Control

The Mini Master Control Switchers host a variety of control options. Each unit ships with the standard 1RU control panel. Evertz® also offers the EV2100MCP for a more robust control panel for installation where operator control is required.

The switcher units also support the GVG110, M2100 and M2100 Mini Master Control Panels. Automation control is offered through the 10XL automation protocol as well as the M2100 protocol, Quartz protocol and XY for logo control only. This full range of automation interfaces guarantees easy installation and facility compatibility.

Audio Processing

The Mini Master Control Switchers incorporate the latest in audio processing. Source selection is defined on an input-by-input basis. Each input can be either embedded or discrete as each unit has support for 8 channels of associated audio. Transition switching from embedded to discrete inputs is married to the video transition rate and handled internally by the system processor.

The robust audio processing is being successfully used for multi-language broadcasts, channel remapping, 5.1 audio mixing, SAP programming, EAS audio voice-over insertion, live news and weather, secondary audio channel device control, and a host of other audio processing situations. All audio configurations are done from the internal HTML configuration server.

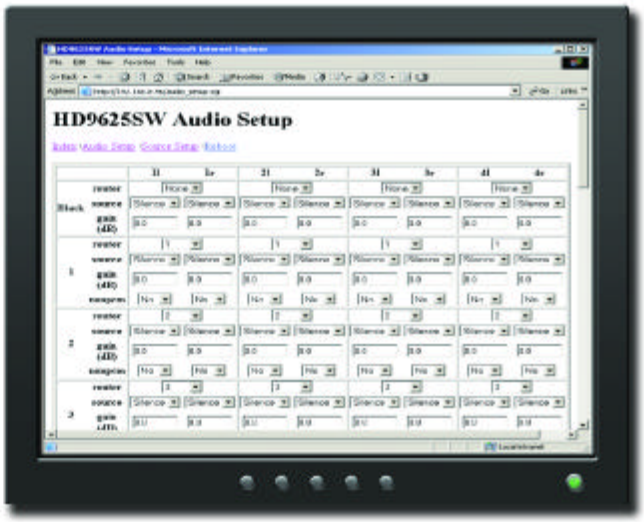

All of Evertz® Mini Master Control Switchers are logo-enabled. They incorporate the complete keyer functionality found in our standard Logo Inserter products. This includes full-screen logo playout, animated and static logos, time and temperature logos as well as crawling text and EAS insertion.

Video Inputs & Outputs

Each Mini Master Control Switcher incorporates an Evertz® 1200 series video router, providing ample inputs from digital servers, upstream feeds, cart machines, live cameras and VTR units. The separate program and preview output paths allow you to preview content prior to going to air. Separate Key and Fill inputs allow for the insertion of external computer generated data from any capable source and does not interfere with the Logo Insertion keyer layer.

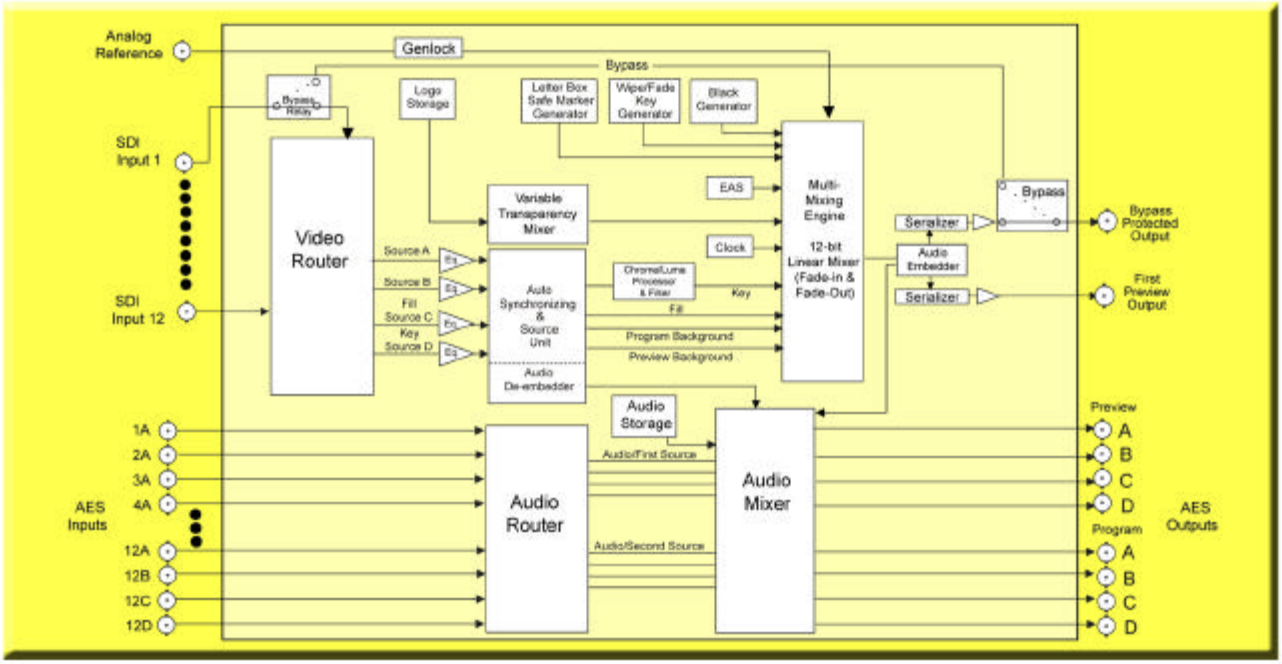

Channel Branding

Scalable Keyers, Logo, and Media Inserters

Trusted by the networks and production facilities worldwide, the Evertz® family of Channel Branding products offers a wide range of capabilities and features that meet the needs of the modern broadcast facility. The lineup of Keyers, Logo, and Media Inserters provide the solutions for your HD, SD and Analog branding requirements.

The fully integrated systems have been designed to meet not only immediate branding needs, but also provide for future expansions. This includes: flexible memory options, static and animated logos, multi-layering of graphics, text crawls and teasers, and audio clips. Evertz® also understands the need for reliability and redundancy of the modern broadcast facility. The Channel Branding products are based the solid-state design, along with features like redundant power supplies and bypass relays.

HD9626DSK

HD9725LGA

9725LG

Downstream Keyers: The Downstream Keyer System incorporates the latest technology to provide an advanced fully-digital keyer. It is ideal for mixing key and fill signals in the "On-Air" environment. The system also features letter-boxing, wipes, fades, and more - providing storage and retrieval capabilities of several user setups and presets. Access to the system can be from the front panel, optional rack mount or desktop control panel.

Logo Inserters: The Logo Inserter System is a complete package that will key in one - or many - static/animated "bugs" over a full bandwidth HD, SD or Analog video signal. Static and animated logos that are created in BMP, TIFF, TGA, QuickTime, and AVI file formats are imported using the Overture™ software using Ethernet. Various memory options allow for up to 8GB of playout cache and up to 16GB of compact flash.

Media Inserters: The Media Inserter System is a complete Logo and Audio insertion package that will key in one - or many - static/animated "bugs" over a full bandwidth HD, SD or Analog video signal (like the Logo Inserters). It will also "duck insert" preformatted audio WAV clips. Various memory options allow for up to 8GB of playout cache and up to 16GB of compact flash.

Network Branding

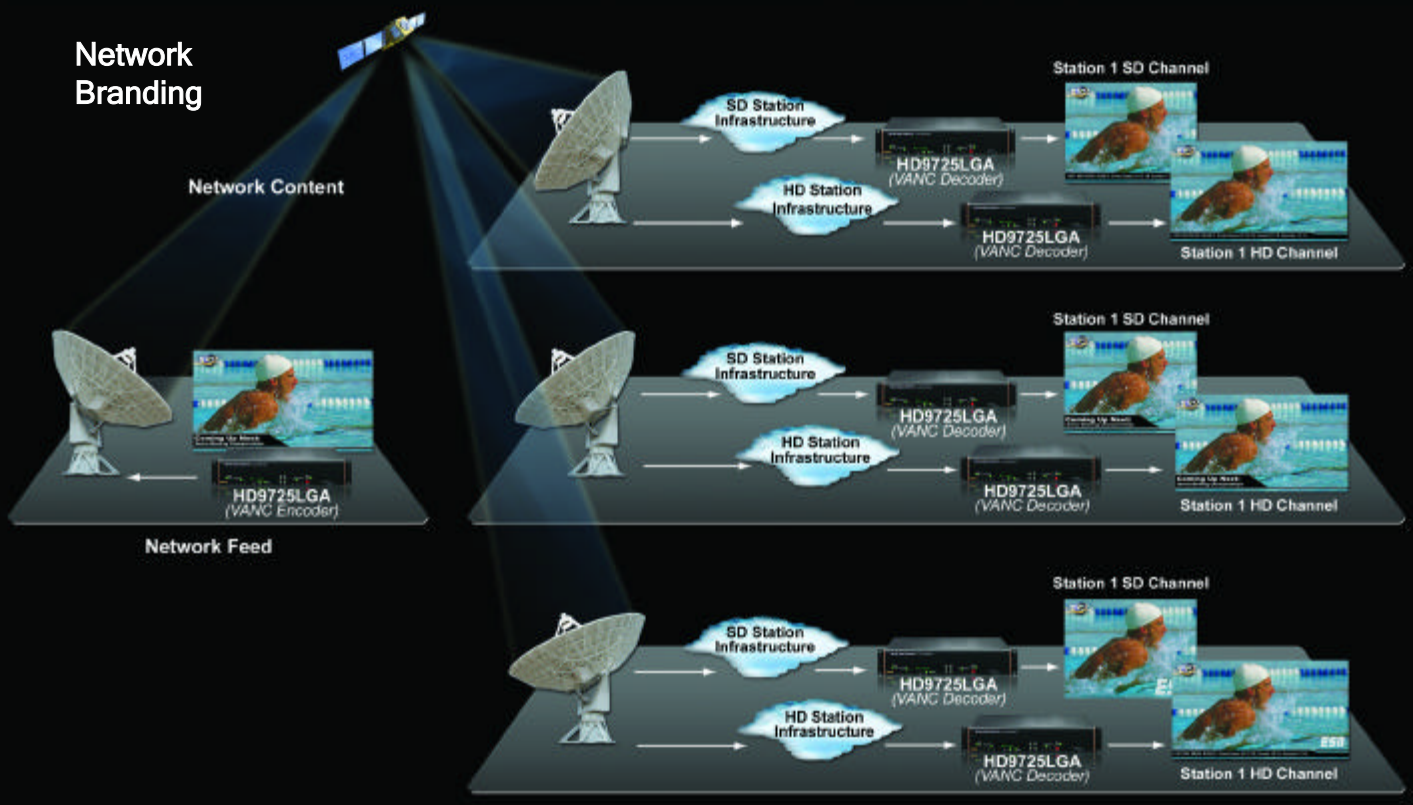

Lidia 4 Branding System

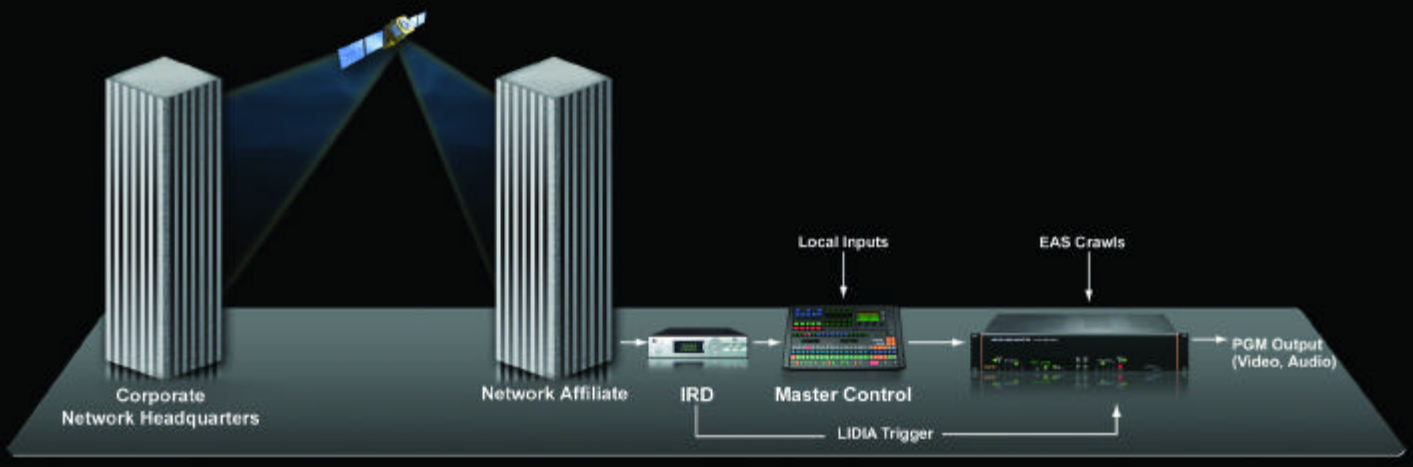

Emergency Alert System (EAS)

HD9725LG & HD9725LGA

The HD9725LG Logo Inserter system is a complete HD/SD Logo Insertion package that will key one, or many, static/animated "bugs" over an HD or SD video signal. Logos created in BMP, Tiff, TGA or Wave file formats can be imported into the Evertz® overture™ software and transferred to the HD9725LG via Ethernet. Logos are stored in flash memory and can be quickly accessed via front panel, quick select keys, GPI inputs, automation and overture™. With the removable Compact Flash option you can have access of up to 8 Gigabytes of on-line logo storage space and virtually unlimited archived media storage.

The HD9725LGA Media Inserter system is a complete Logo and Audio insertion package that will key one, or many, static/animated "bugs" over a HD or SD video signal. It will also duck program audio, insert preformatted audio clips (WAV files), and voiceovers.

The HD9725LG and HD9725LGA has been designed to manage and store multiple logos. The size of each logo is variable and ranges from 1/25th to full screen. The position of the logo, fade rates, clip association and animation rates are user-controllable. Up to 16 logos can be keyed simultaneously with independent fade control for each logo. The onboard preview allows you to cue your logos for position and content verification prior to going "On Air". The Media Inserter Voice Over audio input allows for 1 button audio switching.

The EAS crawl support allows for connection to an existing EAS decoder. This RS232 connection allows weekly tests (white text on green), watch alerts (white on yellow) and warnings (white on red) to be scrolled across the video with no need for format conversion. The variable height text font can be positioned anywhere on the screen and rendered with any True Type font. A GPI can be used to insert the EAS audio on the HD9725LGA.

The HTXT option allows for the creation of custom text messages that can be displayed as crawls or fixed position fields on top of keyed graphic logos. These user-defined elements can be dynamically updated by Ethernet using the overture™ software. Text crawls and fields retain display information such as background/foreground transparency, color, position and font while the dynamic text may be changed without re-creating the associated logo graphics.

Features

- Stores and inserts static and animated logos or media clips
- Multiple simultaneous logos can be keyed directly onto the HD or SD video signal
- Multi-layer keying
- Supports 1080i, 720p, 1035i, 1080psF, 480p, 525, and 625 formats
- Full 12 bit linear video keyer with logo fade-in and fade-out processing
- Independent control of logo position, transparency and offset
- Independent control of fade in and fade out of static logos
- Input bypass relays for power failure protection
- Automatic equalization up to 100m @ 1.5Gb/s (Belden 1694A or equivalent)
- Program and Preview outputs
- Reference to input video or colour black
- Gigabit Ethernet interface
- LTC input for analog or digital “Breakfast clocks"
- Manage logos from a standard PC using Ethernet and overture software
- Standard 256MB compact flash storage with 512MB playout cache
- Optional +HTXT feature to support crawls and text teasers/snipes
- Optional 2GB, 4GB or 8GB internal compact flash storage
- Optional additional removable flash memory of 2GB, 4GB or 8GB
- Option to increase playout cache to 2GB, 4GB or 8GB DRAM
- Download logos and audio clips from a standard PC using ethernet using Evertz® overture™ software (included)

HD9725LGA Additional Features
- Eight AES pair inputs and eight AES pair outputs
- Full 4 pair audio voice over mixing for Dolby 5.1 audio
- Includes embedded audio mixing with 4 AES pair de-embedding and re-embedding for voice over and clip inserts
- Audio bypass mode for passing Dolby E

EAS Option Features
- Emergency alert crawls
- Interfaces to TFT and Sage EAS decoders

9725LG & 9725LGA

The 9725LG Logo Inserter is a complete SD Logo Insertion package that will key one, or many, static/animated "bugs" over SD video signal. Logos created in BMP, Tiff, TGA file formats can be imported into the Evertz® overture™ software and transferred to the 9725LG via Ethernet. Logos are stored in flash memory and can be quickly accessed via front panel, quick select keys, GPI inputs, automation and overture™. With the removable Compact Flash option you can have access of up to 4 Gigabytes of on-line logo storage space and virtually unlimited archived media storage.

The 9725LGA Media Inserter is a complete Logo and Audio insertion package that will key one, or many, static/animated "bugs" over an SD video signal. It will also "Duck" insert preformatted audio clips (WAV files).

The 9725LG and 9725LGA have been designed to manage and store multiple logos. The size of each logo is variable and ranges from 1/25th to full screen. The position of the logo, fade rates, clip association and animation rates are user-controllable. Up to 16 logos can be keyed simultaneously with independent fade control for each logo. The onboard preview allows you to cue your logos for position and content verification prior to going "On Air". The Media Inserter Voice Over audio input allows for 1 button audio switching.

The EAS crawl support allows for connection to an existing EAS decoder. This RS232 connection allows weekly tests (white text on green), watch alerts (white on yellow) and warnings (white on red) to be scrolled across the video with no need for format conversion. The variable height text font can be positioned anywhere on the screen and rendered with any True Type font.

The TXT option allows for the creation of custom text messages that can be displayed as crawls or fixed position fields on top of keyed graphic logos. These user-defined elements can be dynamically updated by Ethernet using the overture™ software. Text crawls and fields retain display information such as background/foreground transparency, color, position and font while the dynamic text may be changed without re-creating the associated logo graphics.

Features

- Stores and inserts static or animated logos
- Multiple simultaneous logos can be keyed directly into SD video
- Incorporates a linear keyer that provides various transparency to your logos
- Multi-layer keying
- Provides independant fade control for each logo
- 32 programmable GPI contact closures
- 16 programmable GPO outputs
- Download media from a standard Windows PC running overture™ software
- FTP file transfer and maintenance using overture™ software
- Fade all out capability provided on program video output
- Standard 256MB flash storage with 512MB playout cache
- Program output bypass relay protected
- Preview/Program or key/fill output modes
- Optional redundant power supply
- Optional rackmount or desktop remote control panels
- Optional EAS crawl support for Sage, TFT and DASDEC Decoders
- EAS supports all new alert codes including amber alerts
- Optional 1GB or 2GB internal flash storage space
- Optional additional removable memory 1GB, 2GB or 4GB compact flash storage
- Optional TXT features for scrolling and dynamic text titling (snipes) and crawls
- Up to 4GB playout cache memory options

9725LGA Additional Features

- Associate audio clips to play when logos are faded in
- 1 button alternate audio voice overs
- Quad AES inputs and outputs for discreet 5.1 Dolby

AN9725LG

The AN9725LG Logo Inserter system is a complete analog logo insertion package that will key one or many static/animated "bugs" over a composite analog video signal. Logos created in BMP, Tiff, and TGA file formats can be imported into the Evertz® overture™ software and transferred to the AN9725LG via Ethernet. Logos are stored in flash memory and can be quickly accessed via front panel, quick select keys, GPI inputs, automation and overture™. With the removable Compact Flash option you can have access of up to 2 Gigabytes of on-line logo storage space and virtually unlimited archived media storage.

The AN9725LG has been designed to manage and store multiple logos. Each logo size is variable and ranges from 1/25th to full screen. The position of the logo, fade rates and animation rates are user-controllable. Up to 16 logos can be keyed simultaneously with independent fade control for each. The onboard preview allows you to cue your logos for position and content verification prior to going "On Air".
The EAS crawl support allows for connection to an existing EAS decoder. This RS232 connection allows weekly tests (white text on green), watch alerts (white on yellow) and warnings (white on red) to be scrolled across the analog video with no need for format conversion. The variable height text font can be positioned anywhere on the screen and rendered with any True Type font.

The TXT option allows for the creation of custom text messages that can be displayed as crawls or fixed position fields on top of keyed graphic logos. These user-defined elements can be dynamically updated by Ethernet using the overture™ software. Text crawls and fields retain display information such as background/foreground transparency, color, position and font while the dynamic text may be changed without re-creating the associated logo graphics.

Features

- Multiple simultaneous logos can be keyed directly into composite analog video
- Stores and inserts static or animated logos
- Incorporates a linear keyer that provides various transparency levels to your logos
- Provides independent fade rates for each logo
- 32 programmable GPI contact closures
- 16 programmable GPO outputs
- Download media from a standard Windows PC running overture™
- EAS supports all new alert codes including child abduction emergency
- FTP file transfer and maintenance using overture™ software
- Fade all out capability provided on program video output
- Program output bypass relay protected
- Matches logo to input video ±3dB range
- Can correct video levels ±3dB
- Standard 256MB flash storage with 512MB playout cache
- Multi-layer keying
- Preview/Program or key/fill output modes
- Optional 1GByte or 2GByte internal flash storage space
- Optional additional removable memory 1GByte or 2GBytes compact flash storage
- Optional rackmount or desktop remote control panels
- Optional EAS crawl support for Sage, TFT and DAS DEC Decoders
- Optional TXT for scrolling and dynamic text titling
- Optional redundant power supply
- SDI upgrade by factory retrofit
- Up to 2GB Playout memory options

7725DSK-LG, 7725DSK-LG-HD

HD/SD Logo Inserter & Media Keyer

The 7725DSK-LG Downstream Keyer and Logo Inserter is a complete package that will insert simultaneous static or animated logos over a full bandwidth SDI program video signal.

The 7725DSK-LG has been designed to manage and store multiple logo objects. Logos are stored in non-volatile Flash memory and may be downloaded to the hardware via an RS-232 serial interface or via Ethernet FTP using the *overture* software. The 7725DSK-LG has a key and fill input to allow for external keyer sources.

In addition to the support for another external keyer, one animated logo or up to 16 static logos can be keyed simultaneously with independent fade control for each static logo. The size of each logo is variable and ranges from 1/25th to full screen. The position of the logo, fade rates, and animation rates are also user controllable. The 7725DSK-LG comes with 384MB of playout cache and 1GB of compact flash storage.

The onboard preview allows you to cue your logos for position and content verification prior to going "On Air". The optional features of the 7725DSK-LG are an air temperature probe and a crawl option which provides the ability to insert crawls with static content.

Features & Benefits

- SDI mixer or downstream keyer with full preview
- Supports 525i/59.94 and 625i/50 video formats (in 7725DSK-LG only)
- Supports 525i/59.94, 625i/50, 720p/50, 720p/59.94, 1080i/50, and 1080i/59.94 video formats (in 7725DSK-LG-HD only)
- Variety of smooth transitions including cut, fade and 8 angles of wipes
- Full 12 bit linear keyer with video fade-in and fade-out processing
- Stores and inserts 1 animated or up to 16 static logos with independent control of logo position, transparency and offset. Independent controls of fade in and fade out for static logos
- Download logos from a standard PC using Ethernet using *overture* software
- 384MB of playout cache; 1GB of compact flash storage
- LTC input for analog or digital 'Breakfast Clock' logos
- Built-in Black Generator
- 8 channel embedded audio support
- Automatic equalization up to 250m (Belden 8281 or equivalent cable)
- Video input bypass relays for power failure bypass protection
- Multiple control interface options including GPI, RS232 automation control
- Optional Rack mount control panel
- Optional crawl support for static crawls
- Optional desktop remote control panel available
- Optional temperature probe for temperature logos

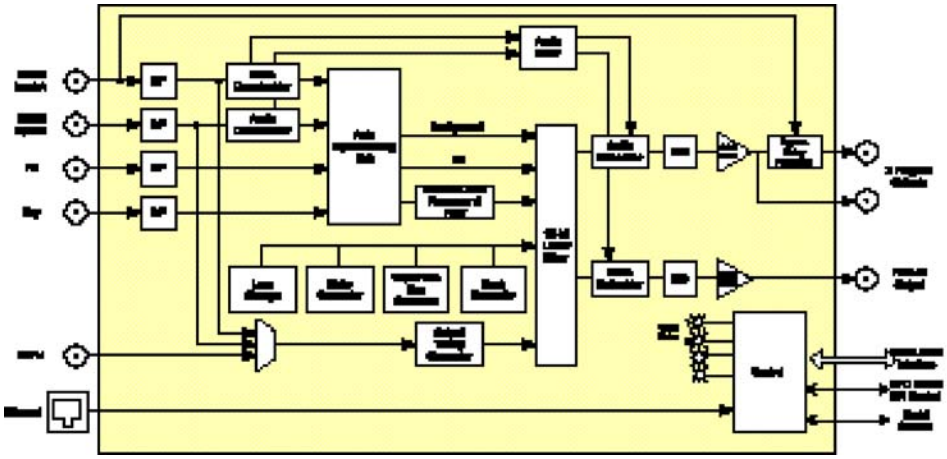

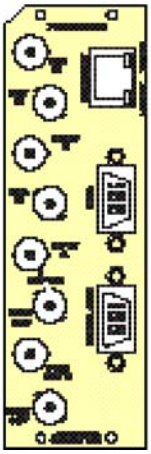

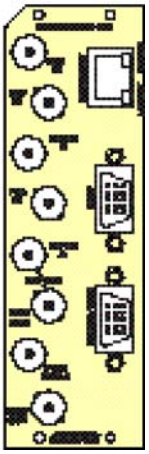

Specifications

Serial Video Input

Standard:	270Mb/sec SMPTE 259M-C, 525 or 625 line component 1.5Gb/sec SMPTE 292M (7725DSK-LG-HD only)
Number of Inputs:	2 Background, 1 Fill, 1 Key
Connector:	BNC per IEC 60169-8 Amendment 2
Equalization:	Automatic 300m @ 270 Mb/s, 100m @ 1.5Gb/s with Belden 1694 or equivalent cable
Return Loss:	> 15dB up to 1.5Gb/s

Serial Video Outputs

Number of Outputs:	2 Program, 1 Preview
Standard:	Same as input
Connectors:	BNC per IEC 60169-8 Amendment 2
Signal Level:	800mV nominal
DC Offset:	0V ±0.5V
Rise and Fall Time:	750ps nominal
Overshoot:	<10% of amplitude
Wide Band Jitter:	< 0.2 UI

Video Reference

Type:	NTSC or PAL Colour Black 1 V p-p
Connectors:	BNC per IEC 60169-8 Amendment 2
Termination:	75Ω

LTC Reader (on breakout cable)

Standard:	SMPTE 12M
Frame Rate:	25 and 30 Fps nominal
Connectors:	3 pin female XLR type connector
Level:	0.2 to 4V p-p, balanced or unbalanced

Control (on breakout cable)

Remote Panel Port:	9 pin female "D", RS-422 9600 baud, 8 bits, no parity Remote control panel interface (only available on RCP or DCP versions)
Serial Control Port:	9 pin female "D", RS-232/422 8 bits, no parity, baud rate depends on protocol
COM D Port:	9 pin female "D", RS-232/422 8 bits, no parity, baud rate depends on protocol
Selectable protocol:	Automation, temperature probe interface
Ethernet Port:	RJ-45 100Base T Ethernet, TCP/IP, logo transfers, Virtual serial ports

General Purpose Inputs and Outputs:

Number of Inputs:	8, programmable control functions
Number of Outputs:	4, programmable tally functions
Type:	Opto-isolated, active low
Connector:	15 pin female High-density D
Signal Level:	Pulled up to Vext supplied voltage 3.3V DC provided

Electrical:

Voltage:	+12VDC
Power:	22 W
EMI/RFI:	Complies with FCC Part 15 Class A, EU EMC Directive

Physical:

Number of Slots:	2

Ordering Information

7725DSK-LG	SD Downstream Keyer with Internal Logo with VistaLINK® support
7725DSK-LG-HD	HD Downstream Keyer with Internal Logo with VistaLINK® support
Ordering Options	Rear Plate must be specified at time of order Eg: Model +3RU
+RCP	Optional Rack mountable remote control panel.
+DCP	Optional Desktop remote control panel
+CLH	Optional crawl support (static contents)
+TP	Optional Air temperature probe
+E	Optional EAS crawl insertion (North America only)
Rear Plate Suffix	
+3RU	3RU Rear Plate for use with 7700FR-C Multiframe
+1RU	1RU Rear Plate for use with 7701FR Multiframe
Enclosures	
7700FR-C	3RU Multiframe which holds up to 15 single slot modules
7701FR	1RU Multiframe which holds up to 3 single or dual slot modules

HD9626DSK

Downstream Keyer

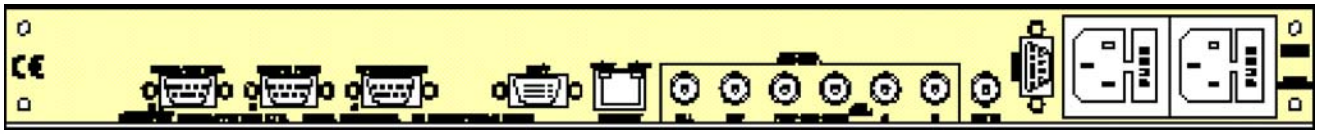

The HD9626DSK Downstream Keyer system incorporates the latest technology to provide an advanced fully digital keyer. It is ideal for bug keying, side by side comparison applications, etc. The system also features letter boxing, a safe area/safe title, wipes, fades and more. The HD9626DSK Downstream Keyer consists of a 1RU frame with front panel control, optional remote control panel, and GPI control for stored pre-sets.

The HD9626DSK provides storage and retrieval capabilities of several user setups and presets. Evertz automation protocol allows control from 3 party sources for life line monitoring as well as function control. Contact your Automation provider for driver availability.

Features & Benefits

- Both Mix and additive keying modes provided
- Auto-timing HDTV key, fill, and background inputs (up to 1 line)
- GPI and RS232/422 inputs for fade/transition control
- Internal black generator for fade to black applications
- Built-in letter box generator for non 16x9 aspect ratio cropping
- 12 bit processing linear keying providing high quality results for both transparency and soft edges
- Control of key gain and offset are provided
- Full control and status is provided from front panel display
- Level triggered programmable GPI's
- User-programmable presets are provided
- Optional rack mount or desktop remote control
- Optional redundatn power supply
- Optional bypass relay for program output

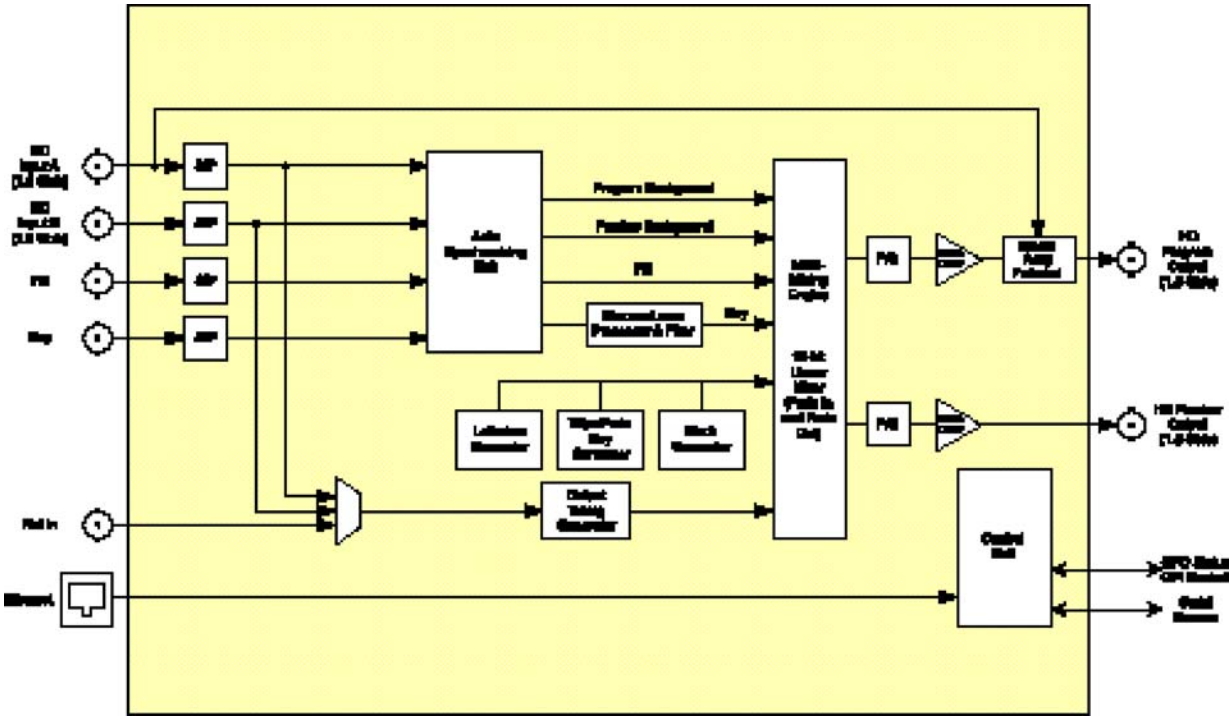

Specifications

Serial Digital Video Input:

Standard:	SMPTE 292M 1.485Gb/s 1080i/60, 1080i/59.94, 1080/50, 1080p/24(sF), 1080p/23.98(sF), 720p/60, 720p/59.94, 480p/60, 480p/59.94
Number of Inputs:	4 (A, B, Key and Fill)
Connector:	BNC per IEC 60169-8 Amendment 2
Equalization:	Automatic to 100m @1.5Gb/s with Belden 1694A (or equivalent) 25m with bypass relay installed
Impedance:	75Ω

Digital Video Output:

Standard:	Same as input
Number of Outputs:	2 (Program and Preview)
Connector:	BNC per IEC 60169-8 Amendment 2
Signal Level:	800mV nominal
DC Offset:	0V ±0.5V
Rise and Fall Time:	200ps nominal
Overshoot:	< 10% of amplitude
Wide Band Jitter:	< 0.2UI
Impedance:	75Ω

Control:

Serial Control:	RS-232/422, 8 bits, no parity 9600, 19200, 38400, 57600 baud computer control of all functions
Upgrade:	RS-232, 57600 baud, 8 bits, no parity for firmware upgrades

General Purpose In/Out:

Number of inputs:	8
Number of outputs:	4
Type:	Opto isolated, active low
Connector:	Female High Density DB-15
Signal level:	+5V nominal

Physical:

Dimensions:	19"W x 1.75"H x 18.75"D (483mm W x 45mm H x 477mm D)
Weight:	8lbs (3.5kg)

Electrical:

Power:	Auto ranging 100-240V AC 50/60Hz 30V A
Safety:	ETL Listed Complies with EU safety directive
EMI/RFI:	Complies with FCC Part 15 Class A EU EMC Directive

Ordering Information

HD9626DSK	HD Downstream Keyer

Ordering Options

+2PS	Redundant power supply
+DCP	Optional Desktop Control Panel
+RCP	Optional Rack Mount Remote Control Panel

HD9725LG, HD9725LGA

HD/SD Logo Inserter and Media Keyer

The HD9725LG Logo Inserter system is a complete HD/SD Logo Insertion package that will key one, or many, static/animated "bugs" over an HD or SD video signal. Logos created in BMP, Tiff, TGA or Wave file formats can be imported into the Evertz *overture* software and transferred to the HD9725LG via Ethernet. Logos are stored in flash memory and can be quickly accessed via front panel, quick select keys, GPI inputs, automation and *overture*. With the removable Compact Flash option you can have access of up to 8 Gigabytes of on-line logo storage space and virtually unlimited archived media storage.

The HD9725LGA Media Inserter system is a complete Logo and Audio insertion package that will key one, or many, static/animated "bugs" over a HD or SD video signal. It will also duck program audio, insert preformatted audio clips (WAV files), and voiceovers.

The HD9725LG and HD9725LGA has been designed to manage and store multiple logos. The size of each logo is variable and ranges from 1/25th to full screen. The position of the logo, fade rates, clip association and animation rates are user-controllable.

Up to 16 logos can be keyed simultaneously with independent fade control for each logo. The onboard preview allows you to cue your logos for position and content verification prior to going "On Air". The Media Inserter Voice Over audio input allows for 1 button audio switching.

The EAS crawl support allows for connection to an existing EAS decoder. This RS232 connection allows weekly tests (white text on green), watch alerts (white on yellow) and warnings (white on red) to be scrolled across the video with no need for format conversion. The variable height text font can be positioned anywhere on the screen and rendered with any True Type font. A GPI can be used to insert the EAS audio on the HD9725LGA.

The HTXT option allows for the creation of custom text messages that can be displayed as crawls or fixed position fields on top of keyed graphic logos. These user-defined elements can be dynamically updated by Ethernet using the *overture* software. Text crawls and fields retain display information such as background/foreground transparency, color, position and font while the dynamic text may be changed without re-creating the associated logo graphics.

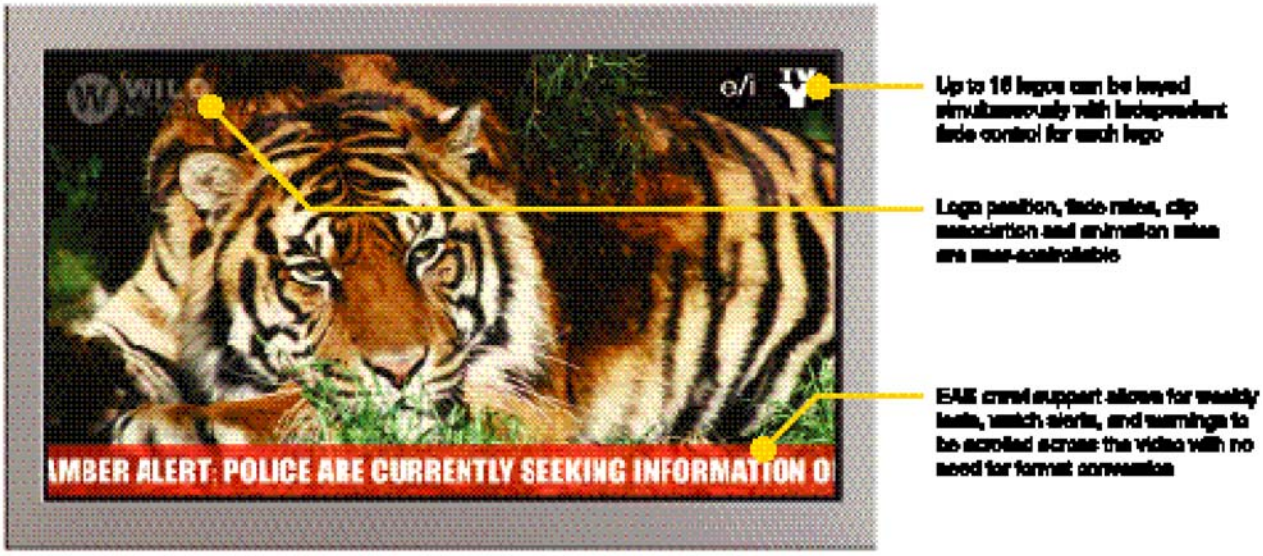

Features & Benefits

- Stores and inserts static and animated logos or media clips
- Multiple simultaneous logos can be keyed directly onto the HD or SD video signal
- Multi-layer keying
- Supports 1080i, 720p, 1035i, 1080psF, 480p, 525, and 625 formats
- Full 12 bit linear video keyer with logo fade-in and fade-out processing
- Independent control of logo position, transparency and offset
- Independent control of fade in and fade out of static logos
- Input bypass relays for power failure protection
- Automatic equalization up to 100m @ 1.5Gb/s (Belden 1694A or equivalent)
- Program and Preview outputs
- Reference to input video or colour black
- Gigabit Ethernet interface
- LTC input for analog or digital “Breakfast clocks"
- Manage logos from a standard PC using Ethernet and *overture* software
- Standard 256MB compact flash storage with 512MB playout cache
- Optional +HTXT feature to support crawls and text teasers/snipes
- Optional 2GB, 4GB or 8GB internal compact flash storage
- Optional additional removable flash memory of 2GB, 4GB or 8GB
- Option to increase playout cache to 2GB, 4GB or 8GB DRAM
- Download logos and audio clips from a standard PC using ethernet using Evertz *overture* software (included)

HD9725LGA Additional Features

- Eight AES pair inputs and eight AES pair outputs
- Full 4 pair audio voice over mixing for Dolby 5.1 audio
- Includes embedded audio mixing with 4 AES pair de-embedding and re-embedding for voice over and clip inserts
- Audio bypass mode for passing Dolby E

EAS Option Features

- Emergency alert crawls
- Interfaces to TFT and Sage EAS decoders

Specifications

Serial Digital Video Input:
Standard: SMPTE 292M, 1.485Gb/s
SMPTE 259M-C, 270Mb/s
Number of Inputs: 1
Connector: BNC per IEC 60169-8 Amendment 2.
Equalization: Automatic to 100m @ 1.5Gb/s with Belden 1694 or equivalent cable
Return Loss: > 15dB up to 1.5Mb/s

Serial Digital Video Outputs:
Standard: Same as input
Number of Outputs: 2 Program, 1 preview
Connectors: BNC per IEC 60169-8 Amendment 2
Signal Level: 800mV nominal
DC Offset: 0V ±0.5V
Rise and Fall Time: 200ps nominal
Overshoot: < 10% of amplitude
Wide Band Jitter: < 0.2 UI

Video Reference:
Source: Menu Selectable from Input Video or Reference Input
Type: Auto Detect depends on video format NTSC or PAL Colour Black 1V p-p
Connector: BNC per IEC 60169-8 Amendment 2
Termination: 75Ω

AES Audio Inputs (HD9725LGA only):
Standards: SMPTE 276M single ended AES
Number of Inputs: 4 Program, 4 Alternative
Connector: BNC per IEC 60169-8 Amendment 2
Sampling Rate: 48kHz
Signal Level: 1V p-p ±10%

AES Audio Outputs (HD9725LGA only):
Standards: SMPTE 276M single ended AES
Number of Outputs: 4 Program, 4 preview
Background and voice over source assignable for each channel
Connector: BNC per IEC 60169-8 Amendment 2
Sampling Rate: 48kHz
Signal Level: 1V p-p
Reference: From Video Reference

Embedded Audio (HD9725LGA only):
Standard: SMPTE 299M
De-embedder: Groups 1 to 2 of embedded audio in video input
Embedder: Program audio embedded to groups 1 and 2 on program video outputs
Preview audio embedded to groups 1 and 2 on preview video output

LTC Reader:
Standard: SMPTE 12M
Frame Rate: 25 and 30 Fps nominal
Connectors: 3-pin female XLR type connector
Level: 0.2 to 4V p-p, balanced or unbalanced

Control:
Upgrade 232 Port: 9-pin female "D", RS-232 57600 baud, 8 bits, no parity firmware upgrade
Remote Panel Port: 9-pin female "D", RS-422 9600 baud, 8 bits, no parity
Remote control panel interface (only available on RCP or DCP versions)
Serial Control Port (3; additional 4 optional):
9-pin female "D", RS-232/422 8 bits, no parity, baud rate depends on protocol
Selectable protocols: Automation, EAS Interface, temperature probe interface
Media Transfers: RJ-45 1000Base T Ethernet, TCP/IP

General Purpose Inputs and Outputs:
Number of Inputs: 16 (standard) additional 16 (optional)
Number of Outputs: 8 (standard); additional 8 (optional)
Type: Opto-isolated, active low
Connector: Terminal block on breakout panel

Physical:
Dimensions:
Electronics: 19" W x 3.5" H x 18.75" D.
(483mm W x 90mm H x 477mm D)
Rack Mount Control Panel:
19" W x 3.5" H x 4.25" D.
(483mm W x 90mm H x 110mm D)
Desktop Control Panel:
7.75" W x 2.0" H x 6.5" D.
(197mm W x 50mm H x 160mm D)

Electrical:
Power:
Electronics: Autoranging 100-240V AC 50/60Hz, 60V A
Optional Remote Control Panel:
12V DC 9W
Autoranging 100-240V AC 50/60Hz power adapter provided
Safety: ETL listed
Complies with EU safety directive
EMI/RFI: Complies with FCC Part 15 Class A, EU EMC Directive

Ordering Information

HD9725LG	HD/SD Logo Inserter System
HD9725LGA	HD/SD Media Inserter System wtih audio support

Ordering Options

+DCP	Optional Desktop remote control panel (replaces front panel control)
+RCP	Optional Rack mount remote control panel (replaces front panel control)
+2PS	Optional Redundant power supply
+CF	Optional Front Panel Compact Flash Drive (does not include compact flash memory card)
+HTXT	Optional Textting features (includes crawls and text teasers)
+TP	Optional Air temperature probe
+E	Optional EAS crawl insertion (North America only)
+PC2G	Optional Internal Playout Memory expansion to 2GB DRAM
+PC4G	Optional Internal Playout Memory expansion to 4GB DRAM
+PC8G	Optional Internal Playout Memory expansion to 8GB DRAM
+IF2G	Optional Internal Compact Flash memory expansion to 2GB
+IF4G	Optional Internal Compact Flash memory expansion to 4GB
+MEM2G	Optional Memory Upgrade Kit to 2GB (includes +PC2G, +IF2G, and +CF2G)
+MEM4G	Optional Memory Upgrade Kit to 4GB (includes +PC4G, +IF4G, and +CF4G)

Accessories

+CF2G	Optional External Compact Flash Expansion to 2GB (includes front panel compact flash drive)
+CF4G	Optional External Compact Flash Expansion to 4GB (includes front panel compact flash drive)
+CF8G	Optional External Compact Flash Expansion to 8GB (includes front panel compact flash drive)
9700BHP-AUX	Optional second breakout bulkhead panel for additional GPI/O serial communication ports

9725LG, 9725LGA

SDI Logo & Media Inserter Systems wtih Audio Support

The 9725LG Logo Inserter is a complete SD Logo Insertion package that will key one, or many, static/animated "bugs" over SD video signal. Logos created in BMP, Tiff, TGA file formats can be imported into the Evertz *overture* software and transferred to the 9725LG via Ethernet. Logos are stored in flash memory and can be quickly accessed via front panel, quick select keys, GPI inputs, automation and *overture*. With the removable Compact Flash option you can have access of up to 4 Gigabytes of on-line logo storage space and virtually unlimited archived media storage.

The 9725LGA Media Inserter is a complete Logo and Audio insertion package that will key one, or many, static/animated "bugs" over an SD video signal. It will also "Duck" insert preformatted audio clips (WAV files).

The 9725LG and 9725LGA have been designed to manage and store multiple logos. The size of each logo is variable and ranges from 1/25th to full screen. The position of the logo, fade rates, clip association and animation rates are user-controllable. Up to 16 logos can be keyed simultaneously with independent fade control for each logo.

The onboard preview allows you to cue your logos for position and content verification prior to going "On Air". The Media Inserter Voice Over audio input allows for 1 button audio switching.

The EAS crawl support allows for connection to an existing EAS decoder. This RS232 connection allows weekly tests (white text on green), watch alerts (white on yellow) and warnings (white on red) to be scrolled across the video with no need for format conversion. The variable height text font can be positioned anywhere on the screen and rendered with any True Type font.

The TXT option allows for the creation of custom text messages that can be displayed as crawls or fixed position fields on top of keyed graphic logos. These user-defined elements can be dynamically updated by Ethernet using the *overture* software. Text crawls and fields retain display information such as background/foreground transparency, color, position and font while the dynamic text may be changed without re-creating the associated logo graphics.

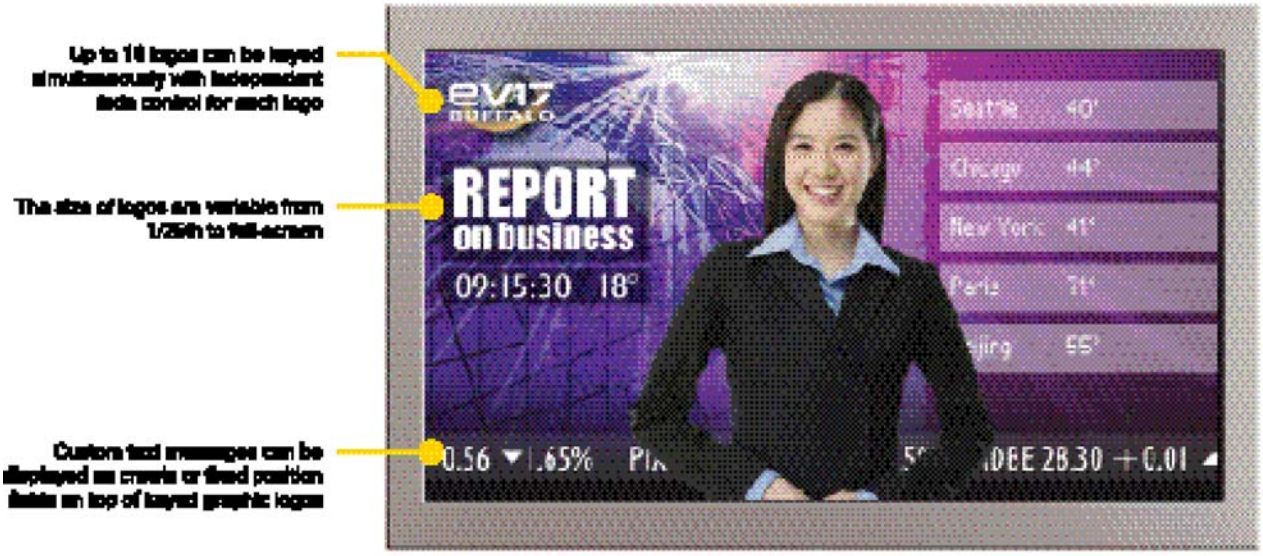

Features & Benefits

- Stores and inserts static or animated logos
- Multiple simultaneous logos can be keyed directly into SD video
- Incorporates a linear keyer that provides various transparency to your logos
- Multi-layer keying
- Provides independant fade control for each logo
- 32 programmable GPI contact closures
- 16 programmable GPO outputs
- Download media from a standard Windows PC running *overture* software
- FTP file transfer and maintenance using *overture* software
- Fade all out capability provided on program video output
- Standard 256MB flash storage with 512MB playout cache
- Program output bypass relay protected
- Preview/Program or key/fill output modes
- Optional redundant power supply
- Optional rackmount or desktop remote control panels
- Optional EAS crawl support for Sage, TFT and DASDEC Decoders
- EAS supports all new alert codes including amber alerts
- Optional 1GB or 2GB internal flash storage space
- Optional additional removable memory 1GB, 2GB or 4GB compact flash storage
- Optional TXT features for scrolling and dynamic text titling (snipes) and crawls
- Up to 4GB playout cache memory options

9725LGA Additional Features

- Associate audio clips to play when logos are faded in
- 1 button alternate audio voice overs
- Quad AES inputs and outputs for discreet 5.1 Dolby

Specifications

Serial Digital Video Input:
Standard: SMPTE 259M, 270 Mb/sec
Number of Inputs: 1
Connector: BNC per IEC 60169-8 Amendment 2
Equalization: Automatic to 200m @ 270 Mb/s with Belden 1694 or equivalent cable
Return Loss: > 15dB up to 270Mb/s

Serial Digital Video Outputs:
Standard: SMPTE 259M, same as input
Number of Outputs: 2 Program, 1 preview
Connectors: BNC per IEC 60169-8 Amendment 2
Signal Level: 800mV nominal
DC Offset: 0V ±0.5V
Rise and Fall Time: 900ps nominal
Overshoot: < 10% of amplitude
Wide Band Jitter: < 0.2 UI

AES Audio Inputs (9725LGA Only):
Standards: SMPTE 276M single ended AES
Number of Inputs: 4 (Program), 4 (Alternative)
Connector: BNC per IEC 60169-8 Amendment 2
Sampling Rate: 48kHz
Signal Level: 1V p-p ±10%

AES Audio Outputs (9725LGA Only):
Standards: SMPTE 276M single ended AES
Number of Outputs: 4 Program, 4 preview
Background and voice over source assignable for each channel
Connector: BNC per IEC 60169-8 Amendment 2
Sampling Rate: 48kHz
Signal Level: 1v p-p
Reference: From Video Reference

Embedded Audio (9725LGA only):
Standard: SMPTE 272M
De-embedder: Groups 1 to 2 of embedded audio in video input
Embedder: Program audio embedded to groups 1 and 2 on program video outputs
Preview audio embedded to groups 1 and 2 on preview video output

LTC Reader:
Standard: SMPTE 12M
Frame Rate: 25 and 30 Fps nominal
Connectors: 3-pin female XLR type connector
Level: 0.2 to 4V p-p, balanced or unbalanced

Control:
Upgrade 232 Port: 9-pin female "D", RS-232 57600 baud, 8 bits, no parity firmware upgrade
Remote Panel Port: 9-pin female "D", RS-422 9600 baud, 8 bits, no parity
Remote control panel interface (only available on RCP or DCP versions)
Serial Control Port (3 standard):
9-pin female "D", RS-232/422 8 bits, no parity, baud rate depends on protocol
Selectable protocols: Automation, EAS Interface, temperature probe interface
Media Transfers: RJ-45 1000Base T Ethernet, TCP/IP

General Purpose Inputs and Outputs:
Number of Inputs: 16 (standard) additional 16 (optional)
Number of Outputs: 8 (standard); additional 8 (optional)
Type: Opto-isolated, active low
Connector: Terminal block on breakout panel

Physical Dimensions:
Electronics: 19" W x 1.75" H x 18.75" D.
(483mm W x 45mm H x 477mm D)
Rack Mount Control Panel:
19" W x 1.75" H x 4.25" D
(483mm W x 45mm H x 110mm D)
Desktop Control Panel:
7.75" W x 2.0" H x 6.5" D
(197mm W x 50mm H x 160mm D)

Electrical:
Power:
Electronics: Autoranging 100-240V AC 50/60Hz, 60V A
Optional Remote
Control Panel: 12V DC 9W
Autoranging 100-240V AC 50/60Hz power adapter provided
Safety: ETL listed
Complies with EU safety directive
EMI/RFI: Complies with FCC Part 15 Class A
EU EMC Directive

Ordering Information

9725LG	SDI Logo Inserter System
9725LGA	SDI Media Inserter System

Ordering Options

+DCP	Optional Desktop remote control panel (replaces front panel control)
+RCP	Optional Rack mount remote control panel (replaces front panel control)
+2PS	Optional Redundant power supply
+CF	Optional Front Panel Compact Flash Drive (does not include compact flash memory card)
+TXT	Optional Textting features (includes crawls and text teasers)
+TP	Optional Air temperature probe
+E	Optional EAS crawl insertion (North America only)
+PC1G	Optional Internal Playout Memory expansion to 1GB DRAM
+PC2G	Optional Internal Playout Memory expansion to 2GB DRAM
+PC4G	Optional Internal Playout Memory expansion to 4GB DRAM
+IF1G	Optional Internal Compact Flash memory expansion to 1GB
+IF2G	Optional Internal Compact Flash memory expansion to 2GB
+IF4G	Optional Internal Compact Flash memory expansion to 4GB
+MEM1G	Optional Memory Upgrade Kit to 1GB (includes +PC1G, +IF1G, and +CF1G)
+MEM2G	Optional Memory Upgrade Kit to 2GB (includes +PC2G, +IF2G, and +CF2G)
+MEM4G	Optional Memory Upgrade Kit to 4GB (includes +PC4G, +IF4G, and +CF4G)

Accessories

+CF1G	Optional External Compact Flash Expansion to 1GB (includes front panel compact flash drive)
+CF2G	Optional External Compact Flash Expansion to 2GB (includes front panel compact flash drive)
+CF4G	Optional External Compact Flash Expansion to 4GB (includes front panel compact flash drive)
9700BHP-AUX	Optional second breakout bulkhead panel for additional GPI/O serial communication ports

AN9725LG

Logo Inserter System

The AN9725LG Logo Inserter system is a complete analog logo insertion package that will key one or many static/animated "bugs" over a composite analog video signal. Logos created in BMP, Tiff, and TGA file formats can be imported into the Evertz *overture* software and transferred to the AN9725LG via Ethernet. Logos are stored in flash memory and can be quickly accessed via front panel, quick select keys, GPI inputs, automation and *overture*. With the removable Compact Flash option you can have access of up to 2 Gigabytes of on-line logo storage space and virtually unlimited archived media storage.

The AN9725LG has been designed to manage and store multiple logos. Each logo size is variable and ranges from 1/25th to full screen. The position of the logo, fade rates and animation rates are user-controllable. Up to 16 logos can be keyed simultaneously with independent fade control for each. The onboard preview allows you to cue your logos for position and content verification prior to going "On Air".

The EAS crawl support allows for connection to an existing EAS decoder. This RS232 connection allows weekly tests (white text on green), watch alerts (white on yellow) and warnings (white on red) to be scrolled across the analog video with no need for format conversion. The variable height text font can be positioned anywhere on the screen and rendered with any True Type font.

The TXT option allows for the creation of custom text messages that can be displayed as crawls or fixed position fields on top of keyed graphic logos. These user-defined elements can be dynamically updated by Ethernet using the *overture* software. Text crawls and fields retain display information such as background/foreground transparency, color, position and font while the dynamic text may be changed without re-creating the associated logo graphics.

Features & Benefits

- Multiple simultaneous logos can be keyed directly into composite analog video
- Stores and inserts static or animated logos
- Incorporates a linear keyer that provides various transparency levels to your logos
- Provides independent fade rates for each logo
- 32 programmable GPI contact closures
- 16 programmable GPO outputs
- Download media from a standard Windows PC running *overture*
- EAS supports all new alert codes including child abduction emergency
- FTP file transfer and maintenance using *overture* software
- Fade all out capability provided on program video output
- Program output bypass relay protected
- Matches logo to input video ±3dB range
- Can correct video levels ±3dB
- Standard 256MB flash storage with 512MB playout cache
- Multi-layer keying
- Preview/Program or key/fill output modes
- Optional 1GByte or 2GByte internal flash storage space
- Optional additional removable memory 1GByte or 2GBytes compact flash storage
- Optional rackmount or desktop remote control panels
- Optional EAS crawl support for Sage, TFT and DAS DEC Decoders
- Optional TXT for scrolling and dynamic text titling
- Optional redundant power supply
- SDI upgrade by factory retrofit
- Up to 2GB Playout memory options

Specifications

Composite Analog Video Input:

Standard:	SMPTE 170M (NTSC) ITU-R BT.470 (PAL-B)
Number of Inputs:	1
Connector:	BNC per IEC 60169-8 Amendment 2
Impedance:	75Ω
Return Loss:	> 40dB up to 4.2MHz

Composite Analog Video Outputs:

Standard:	Same as Input
Number of Outputs:	2 Program, 1 Preview
Connector:	BNC per IEC 60169-8 Amendment 2
Signal Level:	1V nominal
Impedance:	75Ω
DC Offset:	0V ±0.5V
Return Loss:	> 40dB up to 4.2MHz
Frequency Response:	< 0.1dB to 5.5MHz for Program
Differential Gain:	0.25% p-p
Differential Phase:	0.22° p-p
SNR:	>65dB (black video, 100kHz to 5.0 MHz)

LTC Reader:

Standard:	SMPTE 12M
Frame Rate:	25 and 30 Fps nominal
Connectors:	3-pin female XLR type connector
Level:	0.2 to 4V p-p, balanced or unbalanced

Control:

Upgrade 232 Port:	9-pin female "D", RS-232 57600 baud, 8 bits, no parity firmware upgrade
Remote Panel Port:	9-pin female "D", RS-422 9600 baud, 8 bits, no parity. Remote control panel interface (only available on RCP or DCP versions)
Serial Control Port (3 standard; additional 4 optional):	9-pin female "D", RS-232/422 8 bits, no parity, baud rate depends on protocol Selectable protocols: Automation, EAS interface, temperature probe interface
Media Transfers:	RJ-45 1000Base T Ethernet, TCP/IP

General Purpose Inputs and Outputs:

Number of Inputs:	16 (standard) additional 16 (optional)
Number of Outputs:	8 (standard); additional 8 (optional)
Type:	Opto-isolated, active low
Connector:	Terminal block on breakout panel

Physical:

Dimensions:	
Electronics:	19" W x 1.75" H x 18.75" D. (483mm W x 45mm H x 477mm D)
Rack Mount Control Panel:	19" W x 1.75" H x 4.25" D. (483mm W x 45mm H x 110mm D)
Desktop Control Panel:	7.75" W x 2.0" H x 6.5" D. (197mm W x 50mm H x 160mm D)

Electrical:

Power:	
Electronics:	Autoranging 100-240V AC 50/60Hz, 60V A
Optional Remote Control Panel:	12V DC 9W Autoranging 100-240V AC 50/60Hz power adapter provided
Safety:	ETL listed Complies with EU safety directive
EMI/RFI:	Complies with FCC Part 15 Class A, EU EMC Directive

Ordering Information

AN9725LG	Logo Inserter System

Ordering Options

+DCP	Optional Desktop remote control panel (replaces front panel control)
+RCP	Optional Rack mount remote control panel (replaces front panel control)
+2PS	Optional Redundant power supply
+CF	Optional Front Panel Compact Flash Drive (does not include compact flash memory card)
+TXT	Optional Textting features (includes crawls and text teasers)
+TP	Optional Air temperature probe
+E	Optional EAS crawl insertion (North America only)
+PC1G	Optional Internal Playout Memory expansion to 1GB DRAM
+PC2G	Optional Internal Playout Memory expansion to 2GB DRAM
+IF1G	Optional Internal Compact Flash memory expansion to 1GB
+IF2G	Optional Internal Compact Flash memory expansion to 2GB
+MEM1G	Optional Memory Upgrade Kit to 1GB (includes +PC1G, +IF1G, and +CF1G)
+MEM2G	Optional Memory Upgrade Kit to 2GB (includes +PC2G, +IF2G, and +CF2G)

Accessories

+CF1G	Optional External Compact Flash Expansion to 1GB (includes front panel compact flash drive)
+CF2G	Optional External Compact Flash Expansion to 2GB (includes front panel compact flash drive)
9700BHP-AUX	Optional second breakout bulkhead panel for additional GPI/O serial communication ports

All of Evertz® Logo-enabled keyer products ship with the overture™ program used to create logo files for video insertion. This easy-to-use software can import graphic files created in the Tiff, Targe, BMP, Gig or JPG format from professional graphics programs and transfer them to the logo inserter. The software is a utility for converting existing files from RGB to the YCbCr or YPbPr format used in the video domain.

Static & Animated Logos
Images can be displayed at any size up to full-screen

Analog or Digital Clock
Up and down timers are also included

Date & Temperature Logos
Video inserted date and ambient air temperatures are rendered using internal device CG.

Crawl Creation
Features include foreground and background color and transparency

Logos Created with *overture*™

Static or Animated: Static logos are fixed-position/fixed-transparency images. Animated logos have an active position and active transparency series of images displayed at any size up to full-screen. Duration of playout depends on storage size and playout memory installed.

Analog or Digital Clock: The analog clock has a video-inserted rendering of a traditional wall clock, driven from an internal real-time clock or saved to the LTC input. The digital clock had video-inserted digital clock characters, rendered using the internal device CG. Time display options include HH:MM or HH:MM:SS - in 12 or 24-hour styles, Up and down counters are also included.

Date & Temperature: Video-inserted date & ambient air temperatures are rendered using the internal device CG. Internal date values run from either internal real-time clock or slaved to the LTC output if date information is available. Great for re-broadcasting of date-specific material. Temperature display options include Celsius or Fahrenheit, with or without the degree symbol. Temperature logos require the purchase of the optional external temperature probe.

Crawl Creation: Features include foreground/background color & transparency. Set the rate & display position, and have the data displayed using any True Type font. Crawls can automatically transfer and "fade-in" with the simple click of a button.

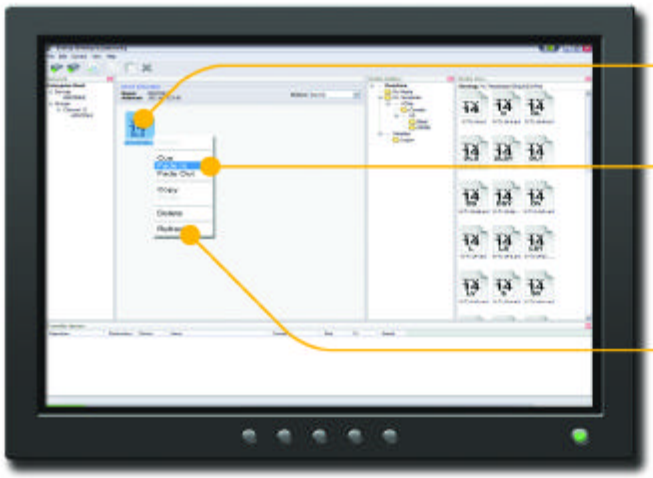

Media Management
Drag-and-drop logo, wave, font and position files from the local PC, network, or between branding devices

Play-out Control
"Right-click" displays a selection menu and allows quick access to a host of features, including the "fade-in" and "fade-out" functions

Object Properties
"Right-click" on any EVL file to display properties and view a thumbnail of the associated logo.

Outline of *overture*™ Functions

Media Management: Drag-and-drop logo, wave, font and position files from the local PC, connected network space, or between channel branding devices. Files can be uploaded, downloaded, archived, or deleted using the easy "right-click" functionality.

Play-out Control: "Right-click" displays a selection menu and allows for quick access to a host of features including the "fade-in" and "fade-out" functions. This allows media control from remote access points.

Object Properties: "Right-click" on any EVL file to display the properties and view a thumbnail of the associated logo. Thumbnail views can be displayed from the connected device as well as on the local PC or network storage space. Properties displayed include H&V, gain, and clock parameters.

VistaLINK® & VistaLINK® PRO PLUS

The Complete NOC/TOC Monitoring Solution

COMPLETE NOC/TOC

VistaLINK® = Interoperability

100% SNMP-based, VistaLINK® easily integrates with other SNMP managers and third-party SNMP compliant equipment, reducing development time, complexity and costs. VistaLINK® and VistaLINK® PRO PLUS are ideal for all your NOC/TOC monitoring & configuration needs.

YOUR SNMP GENIUS

With effective and simple-to-use graphics, unparalleled drill down information, external notification tools and a network of efficient SNMP monitoring & configuration architecture, VistaLINK® and VistaLINK® PRO PLUS provide you with all the details!

VistaLINK® & VistaLINK® PRO PLUS

SNMP Monitoring & Control Software for all Applications

From a simple module setup and configuration tool, to an advanced level monitor & control element manager - and everything in between. Rely on VistaLINK® and VistaLINK® PRO cover all of your application needs.

VistaLINK® PRO

Configuration Management: VistaLINK® PRO configuration software (VLPRO-C) is provided free to users allowing unlimited configuration capabilities for Evertz® VistaLINK® - capable equipment.

Alarm-Event Notification Client: Expand the VistaLINK® PRO configuration tool by adding centralized alarm management. Define & set critical alarms, alarm severities and filters. Built-in external alarm notification tools include audible alerts, “smart” email notification and/or contact closure triggers.

VistaLINK® PRO PLUS

Building on standard VistaLINK® PRO configuration clients, add user-configurable pictorial representations of your broadcast facility - local and remote. Start with global perspectives and drill down to specific rack and frame layouts or consolidate important status information and direct configuration control on a single display. Import facility block diagrams or generate an off-line simulation using virtual equipment and graphics from the VistaLINK® media library. Link multiple views for the most effective facility or application presentation. Integrate your VistaLINK® PRO PLUS graphic screens with a VIP™ or MVP™ and get the best of both on-screen signal display and network monitoring & configuration.

ThumbLINK™: Video, audio and data signal monitoring is further enhanced in VistaLINK® through the ability to view thumbnail images from supporting modules. Thumbnails can be viewed in separate windows or embedded into custom user designed Graphics client UI screens.

Third-Party Monitoring & Interfacing: For 3rd party SNMP-enabled or legacy equipment monitoring and configuration, Evertz® VistaLINK® solution may be extended to unify all your system monitoring needs in one package.

Monitor Everything, View by Exception: Through built in "signal sniffer" modules and with VistaLINK® monitoring all signals 24/7 and sending fault notifications while displaying only these signals as they occur further increases performance and cost efficiency.

Monitor Web Clients: Unlock the capability of a remote system or facility health monitoring solution through VistaLINK® PRO + WEB clients. Go beyond a firewall and monitor your facility conveniently through a browser, while receiving email and pager fault notifications as they occur.

Scheduling & Auto Response: Automate facility monitoring & configuration operations or limit false alarming by scheduling changes based on times/dates or events. Program hardware/router changes to be triggered by incoming alarms or exceeded parameter thresholds. Combine routines and Boolean logic to create complex automated logic response systems. Routines can be created within the program wizard or via external scripting mechanisms.

Router Control: Evertz® and 3rd party router control provides full X-Y style panels or custom user-created virtual panels to handle even the most specific router control needs.

Network Control Panels

The 1RU 9000NCP and 2RU 9000NCP2 VistaLINK® Network Control Panels are low-powered, rack mounted control panel interfaces to VistaLINK® - capable modules, allowing for real-time selection and configuration control of enabled parameters through SNMP!

The NCP units can be used to control a subset of an enabled module's full parameter set - usually the "proc amp" and operational parameters such as video & audio level adjustments and gain control. An updated list of NCP-controlled modules/parameters can be found on the Evertz® website.

NCP units connect to the network via Ethernet and can further be customized with user-specific labels and preset quick access configuration buttons.

VistaLINK® & SNMP

The real "plus" of SNMP is its simplicity. Through Evertz® VistaLINK®, thousands of network nodes are monitored and configured world-wide via SNMP. VistaLINK® PRO and VistaLINK® PRO PLUS unite all SNMP-based equipment from Evertz® and beyond, providing monitoring and configuration capabilities for your mission critical needs. VistaLINK® is the most complete and comprehensive all SNMP-based signal monitoring and equipment configuration solution including:

- *Terminal equipment configuration and monitoring (on the same module)*
- *Fiber module health status and link monitoring*
- *Discrete signal monitoring*
- *Multi-wall display monitoring*
- *Monitoring-by-exception solutions*

Simple, reliable, secure and efficient network monitoring and control for your facility equipment through VistaLINK® and SNMP. All Evertz® VistaLINK® - capable products have built-in Probing and Monitoring.

Effective, simple-to-use graphics, unparalleled drill down information, external notification tools and a network efficient SNMP monitoring & configuration architecture - VistaLINK® PRO PLUS provides you with all the details!

Streaming is Believing

With audio, video & data signal monitoring, through discrete modules or multi-display virtual walls, in place & network monitoring through VistaLINK®, the ability to configure & stream the signal from a remote location to a central monitoring facility or to enabled web clients over IP, signal confidence monitoring is further

From a simple module setup and configuration tool, to an advanced level monitor & control element manager - and everything in between. Rely on VistaLINK® and VistaLINK® PRO cover all of your application needs.

VistaLINK® Capabilities

VistaLINK® Features

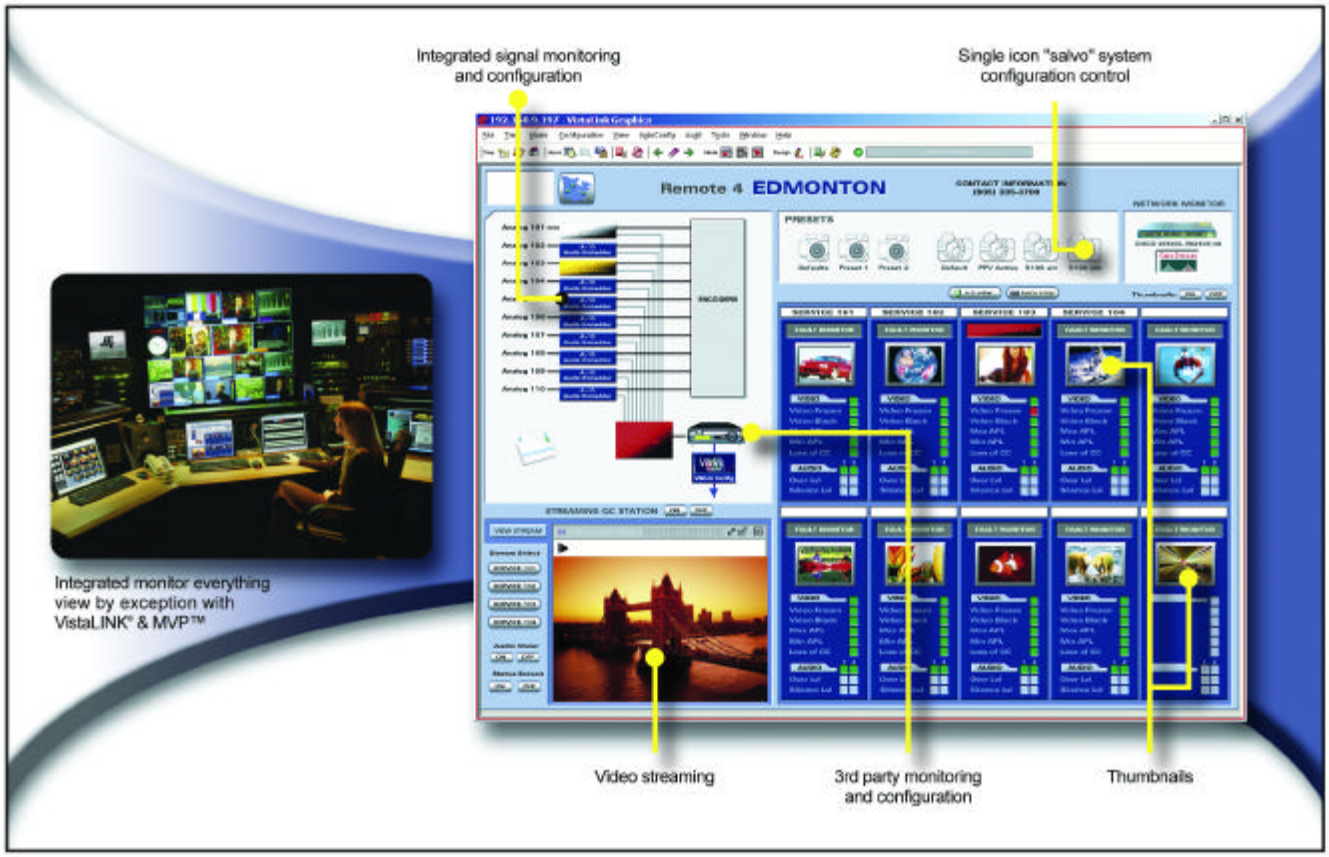

VistaLINK® Flow Chart

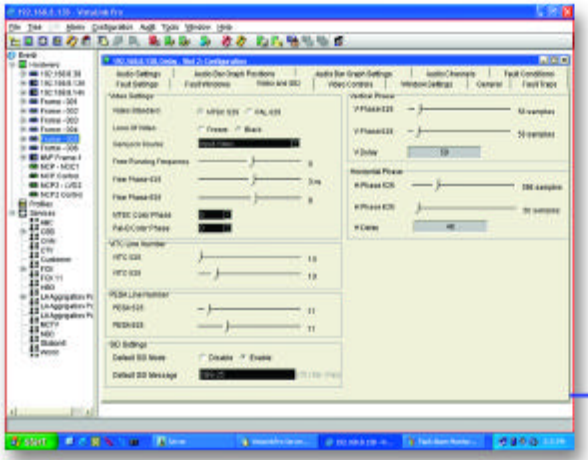

Configuration Client (VLPRO-C)

500/7700 Series

MVP™ Series

SNMP Traps
Thumbnails Streaming

The Network

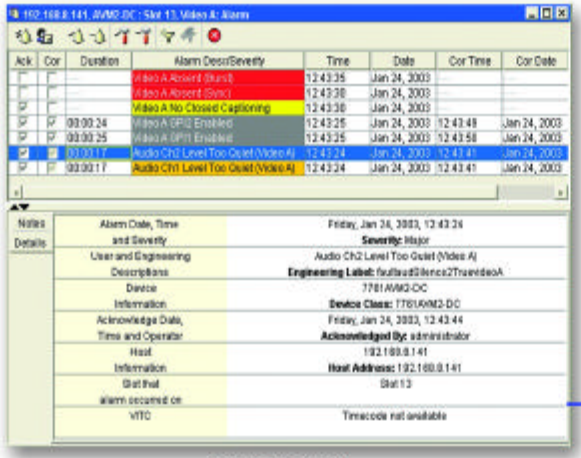

Alarm Client

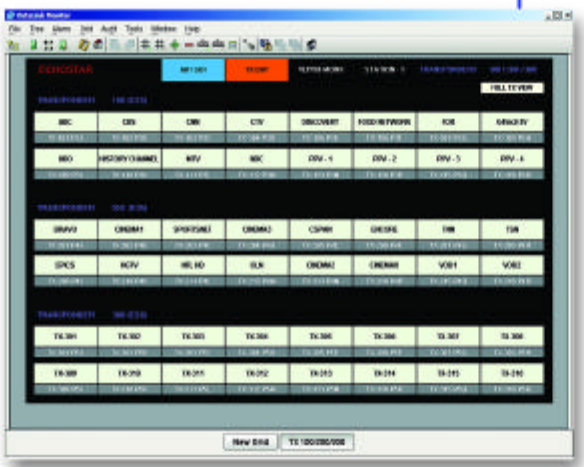

Monitor Grid Client

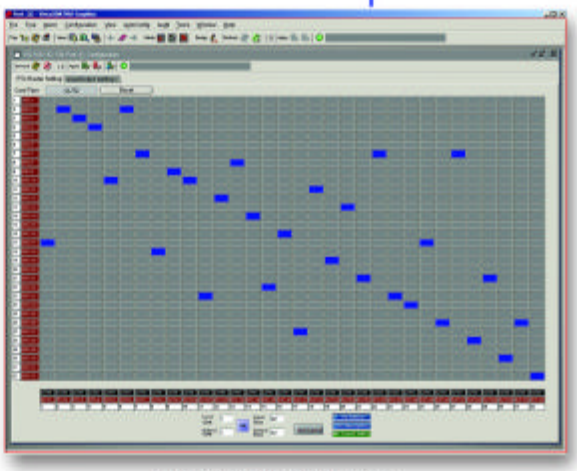

Router Control View

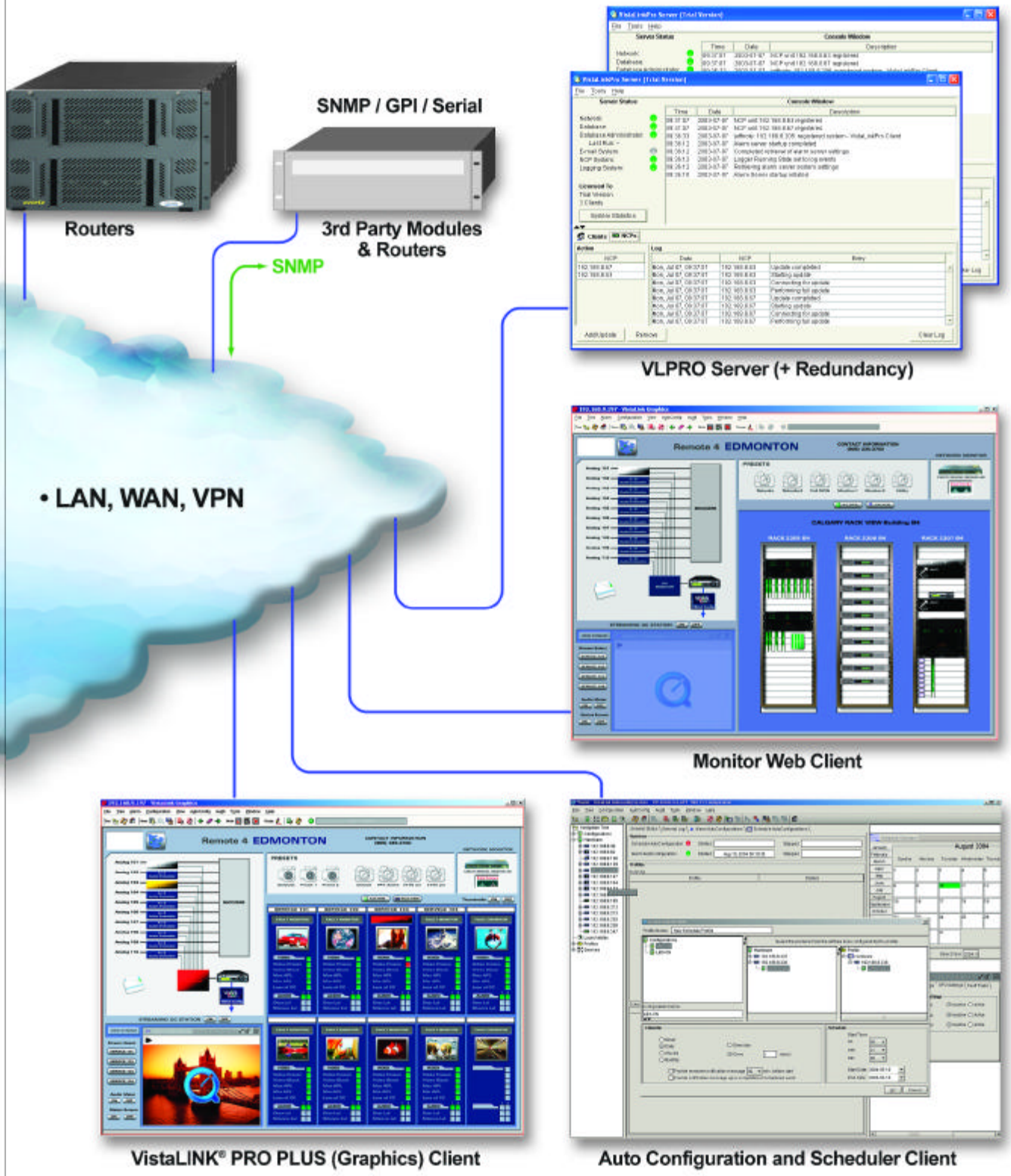
SNMP / GPI / Serial
Routers
3rd Party Modules & Routers
SNMP
• LAN, WAN, VPN
VLPRO Server (+ Redundancy)
Remote 4 EDMONTON
Monitor Web Client
Remote 4 EDMONTON
VistaLINK® PRO PLUS (Graphics) Client
Auto Configuration and Scheduler Client

VistaLINK® & VistaLINK® PRO PLUS

SNMP Monitoring & Control Software for all Applications

Simple, reliable, secure and efficient network monitoring & control for your facility equipment through VistaLINK® and SNMP. All of Evertz® VistaLINK® - capable products have built-in Probing & Monitoring.

VistaLINK® & SNMP - Simple, Reliable, Secure & Efficient

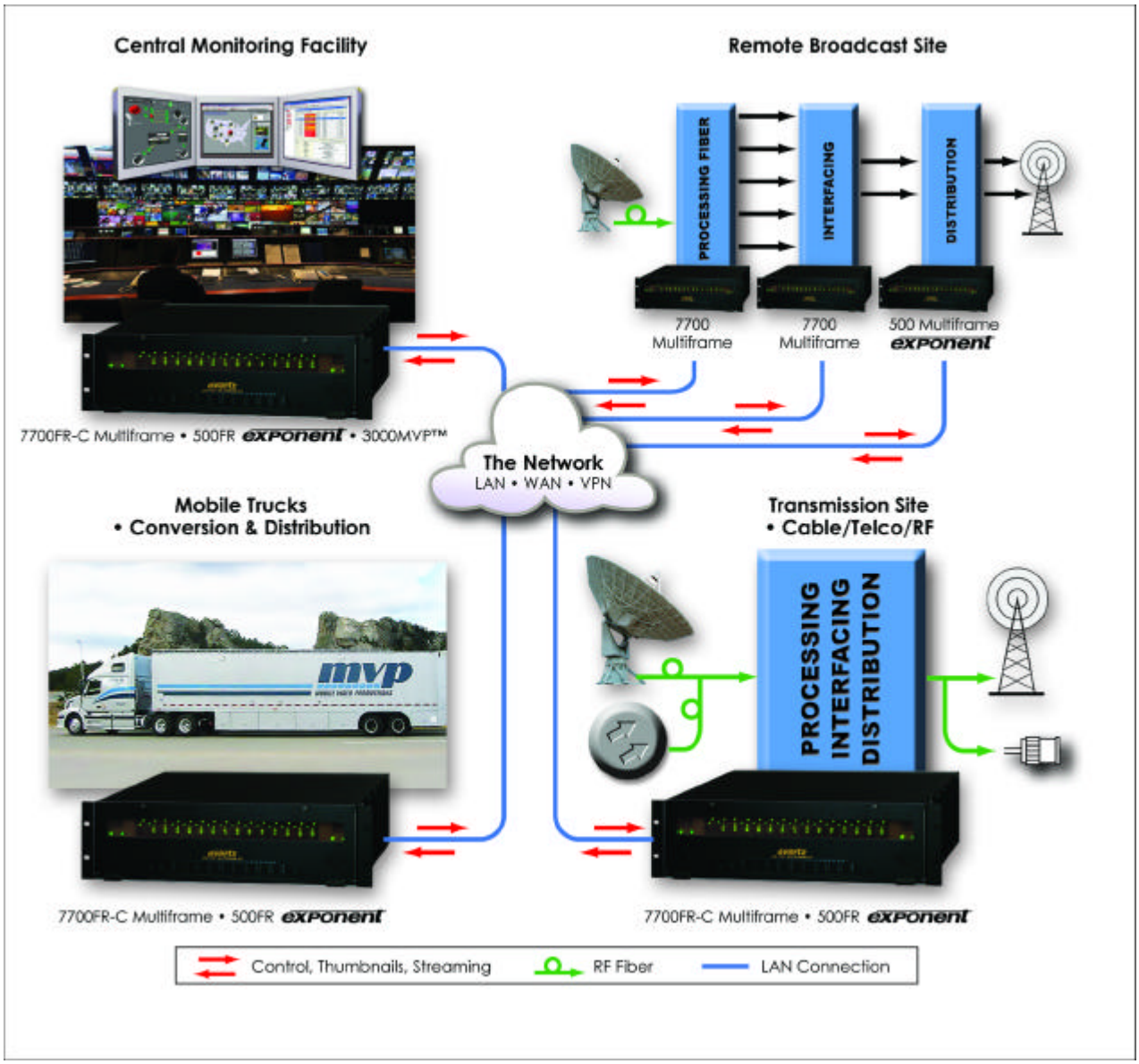

Ordering Information

VLPRO-C	VistaLINK® PRO SNMP configuration-only free with every 7700FC, 500FC or 3000FC module
VLPRO	VistaLINK® PRO SNMP alarm monitoring, email notification and configuration (1 client, 1 year)
VLPRO PLUS	VistaLINK® PRO PLUS SNMP alarm monitoring, email notification and configuration (1 client, 1 year)

Ordering Options

+SCH	VistaLINK® PRO automated configuration & scheduler software
+RSERV	Redundant VistaLINK® PRO server
+TSERV	Thumbnail Server option
+TPD	Third Party TRAP Monitoring option
+web-1	Remote site VistaLINK® system monitoring client (1) using Internet browser
+web-5	Remote site VistaLINK® system monitoring clients (5) using Internet browser

Upgrade Options

VLPRO PLUS	Upgrade existing VistaLINK® PRO client to VistaLINK® PRO PLUS (1 client, 1 year)
VLPRO-SCH	Upgrade existing VistaLINK® PRO to include automated configuration & scheduling software
VLPRO-WEB1	Upgrade for existing VistaLINK® PRO to include remote site VistaLINK® system monitoring

Training & Yearly Subscriptions

VLPRO SET-UP VLPRO TRAINING
VistaLINK® configuration & training session (per Diem)

VLPRO-SER/SUP/LIC 1, 2 or 3 YEAR
Extra 1, 2 or 3 year VistaLINK® PRO PLUS license & support per client

Network Control Panels

9000NCP	VistaLINK® Network Control Panel (1RU)
9000NCP2	VistaLINK® Network Control Panel (2RU)

Evertz® Monitoring & Display solutions - featuring the MVP™ multi-image display processor, the VIP™ multi-input display & signal monitoring product line, and the Quattro™ discrete video & video signal monitoring products. Meeting and exceeding your signal display, monitoring and configuration needs ...now and in the future.

MVP

Multi-Image Display & Monitoring System

The MVP™ revolutionizes the multi-display marketplace with a highly flexible, intuitive, simple yet comprehensive approach to virtual wall monitor applications. The possibility of displaying any input signal to any output monitor can now be realized without the need for DAs or upstream monitor routers.

MVP - Expect the Best

The MVP™ is the next generation of Multi-Image Display Processor technology, boasting the most flexible and feature-rich platform available, making it ideal for all applications where video/audio monitoring & display are required. The MVP™ architecture is revolutionary in its approach, as it does NOT use a PC platform at the core of its operation. By doing so, the MVP™ platform is "bulletproof" and well-suited for 24/7 mission critical environments. Combine this "bulletproof" architecture with the simple and intuitive control interface, and you have a system perfect for any control room.

Evertz® now also offers a completely integrated Master Control environment when interfacing the MVP™ with the Quartz line of Master Control products plus the facility monitoring capability of VistaLINK® PRO software.

MVP At A Glance

VBI data (Closed Captioning, Program Rating, etc.) signal decoding, monitoring & display

Up to 120 unique inputs displayed on a single output

Auto-sensing HD/SD/Analog video on same BNC

Selectable or detectable aspect ratios for customized display of video inputs

Aspect ratio markers

On-screen clocks and counters with external LTC reference and configurable offsets

Computer graphic inputs up to UXGA resolution

Multiple, user-configurable static/dynamic UMDs, on-screen text, tallys, fault messages, borders and background images with transparency control

Up to 4 AES or 4 stereo analog pair audio level with phase correlation metering

Dolby® E metadata decode/display

Key MVP Features & Benefits

- Consolidated - scaling, signal sniffing (fault monitoring), routing and fan-out of inputs
- Supports many output display destinations
- Eliminates the need for a preview/monitor router to support multiple inputs to multiple displays
- Show multiple copies of the same BNC input across displays
- Monitor everything - View By Exception with VistaLINK® and display video inputs only when faults are detected through built-in signal monitoring
- Hardware based - no PC on board, no hard-drive
- Not a frame limited architecture - P-LINK™ interconnects and Ethernet control; does not exhibit PCI bandwidth limitations
- RTOS - Real-Time Operating System
- Highest quality video images - single pass processing
- Expandable - frame not limited to a maximum number of inputs per system - cumulative bandwidth
- True hot-swappable, front-access input, output modules and PSU
- Redundancy options for mission critical operations
- Fast power cycle recovery (15 seconds)
- Fiber output option - single fiber (single or Multi-Mode) up to 10km support
- HD/SD serial output option
- 9:16 output aspect ratio support (WARP™)
- Flexible - usually 2-3 solutions from the same system with options for future growth
- "Out of the box" implementation - set-up is quick and easy
- User-friendly GUI - drag and drop control, fast preset recall and off-line development; real time display layout control

Applications

- Broadcast Facility Master Control
- Satellite Uplink and Downlink
- Cable Head End and IPTV Head End
- Production
- OB Trucks
- Video Walls
- NOC Control Rooms
- Surveillance Security Information Displays
- Traffic and Transportation Applications
- The Gaming and Entertainment Industry

Multi-Input Format & Display Monitoring

- Auto-sensing HD/SD/Analog video input on same BNC
- DVI/RGB
- NTSC/PAL
- 525i/625i
- 1080i/60
- 1080i/59.94
- 1080i/50
- 1080p/24sF
- 1080p/23.98sF
- 720p/60
- 720p/59.94
- 720p/50
- 480p/60
- 480p/59.94

Flexible Output Options

Output Resolutions Supported:

- XGA (1024x768)
- WARP (768x1280)
- SXGA (1280x1024)
- 720P (1280x720)
- WARP 2 (768x1366)
- SXGA+ (1400x1050)
- 480P (720x480)
- WXGA (1280x768)
- UXGA (1600x1200)
- 576P (720x576)
- WXGA 2 (1366x768)
- HD (1920x1080)

Complete Ancillary Data Monitoring & Decode

Decodes:

- XDS
- HD & SD VITC/Source ID
- WSS/AFD adjust/display
- Detect Encoded Audio (AC3/Dolby E)
- EIA-608 - SD Captions
- EIA-708 - HD Captions
- WST - World Standard Teletext
- Source Standard
- Decode/Display Dolby E Metadata

Extensive Graphic Components

- On-screen time of day clocks (analog & digital with external LTC reference and configurable offsets)
- Up and Down timers
- User-definable labels
- Dynamic UMDs & tally from routers and switchers
- Safe area markers

MVP

Multi-Image Display & Monitoring System

The modular architecture and open-frame platform of the MVP™ make it simple to build a system to meet your specific needs. Don't be limited by what the "frame" can handle - with the MVP•, you don't need to worry about physical enclosure limits. If you use up all of the slots in the frame, simply add a second frame and keep growing!

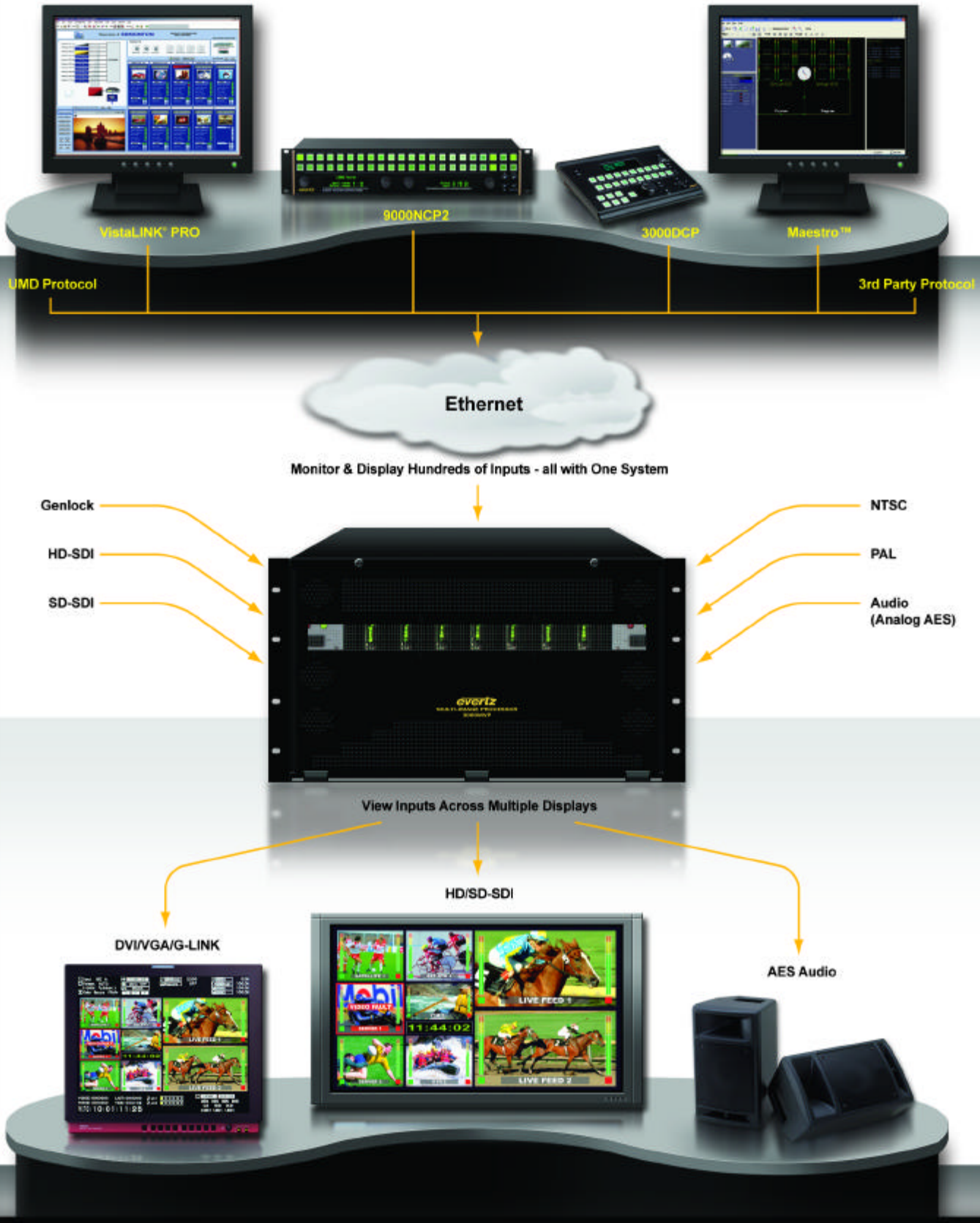

Now control both the MVP™ and the VIP™ using a single point of control, allowing for a fully integrated mixed hardware system. Perfect for control room environments where large MVP™ display walls are required with smaller VIP™ agile displays.

Comprehensive Signal & Data Monitoring

- Loss of video
- Active picture levels
- EDH errors
- Frozen or black video
- Motion detection
- Video format detection
- Loss of audio channels
- Mono audio detection
- Phase reversal
- Audio too loud or too quiet
- Loss of closed captioning
- Loss of closed captioning waveform
- Loss of text channels
- Loss of program rating
- Source ID missing
- VITC missing

System Specifications

Auto-Detecting Video Inputs:
Analog Video: NTSC/PAL
Digital Video: SD-SDI (SMPTE 259M-C)
HD-SDI (SMPTE 292M, 1.5Gb/s)
Built-in embedded audio extraction (up to 2 groups)
HD Formats: 1080i/60, 1080i/59.94, 1080i/50, 1080p/24sF, 1080p/23.98sF, 720p/60, 720p/59.94, 480p/60, 480p/59.94

Computer Graphic Video Inputs:
2 or 4 input module
From 640x480 (VGA) to 1600x1200 (UXGA) resolution
DVI or 15-pin D-sub via adapter

Audio:
Balanced/Unbalanced AES
Balanced analog stereo
On-screen display of level & phase bars
Audio monitoring output, 2 groups (AES/EBU)

Video Outputs:
Single, dual & multiple output support for XGA up to HD resolution
DVI-I connector, BNC and/or fiber interfaces (module dependent)

Frame:
6RU, 15-module agnostic slots
Rack-mountable
Front access
Dual redundant PSU, hot-swappable

AUX Inputs/Outputs:
Up to 64 GPI inputs & 44 GPO outputs
LTC for clock/timer reference
RS-232/422 serial interface

Configuration Control:
Maestro™ graphic interface for design and control
DCP desktop control panel via Ethernet

Electrical:
Dual redundant power supplies with separate AC inlets
Auto-ranging voltage, 100-240V AC, 50/60Hz
Maximum power dissipation: 625W
Typical power dissipation: 350W, 8A

Genlock:
Separate NTSC (SMPTE 170M) and PAL (ITU624-4), color black via BNC

Front Panel Indicators:
PSU status LED & local error/failure LED

Tally Output (GROC):
4-pin terminal, relay N/O, N/C for status/fault alarm

Ordering Information

SDTV/Analog Packages

Signal Display	Inputs	Description
PKG3000MVP-8-SN	8 CH	8 to 72 auto-detecting SD-SDI (with embedded audio as a standard feature) and Composite Analog (NTSC, PAL) video inputs, with frame and frame controller, single power supply and single processor/output display module
PKG3000MVP-16-SN	16 CH	
PKG3000MVP-24-SN	24 CH	
PKG3000MVP-32-SN	32 CH	
PKG3000MVP-40-SN	40 CH	
PKG3000MVP-48-SN	48 CH	
PKG3000MVP-56-SN	56 CH	
PKG3000MVP-64-SN	64 CH	
PKG3000MVP-72-SN	72 CH	

HDTV/SDTV/Analog Packages

Signal Display	Inputs	Description
PKG3000MVP-8-HSN	8 CH	8 to 72 auto-detecting HD-SDI, SD-SDI (with embedded audio as a standard feature) and Composite Analog (NTSC, PAL) video inputs, with frame and frame controller, single power supply and single processor/ output display module
PKG3000MVP-16-HSN	16 CH	
PKG3000MVP-24-HSN	24 CH	
PKG3000MVP-32-HSN	32 CH	
PKG3000MVP-40-HSN	40 CH	
PKG3000MVP-48-HSN	48 CH	
PKG3000MVP-56-HSN	56 CH	
PKG3000MVP-64-HSN	64 CH	
PKG3000MVP-72-SN	72 CH	

With the MVP™, there are many different possible I/O combinations including dual, quad and octo-output display solutions along with redundancy to meet your multi-signal monitoring & display needs. For systems that exceed the standard package input counts, please contact your MVP™ specialist to discuss your options.

For a multi-viewer in a smaller form factor, also ask about the VIP™ - the mini-MVP™ - in out popular 7700 series frame.

Accessories

3000MVP-GI	Dual (2) or Quad (4) computer video inputs per input module
3000MVP-AI	Monitor up to 4 analog pairs or 4 AES/EBU audio channels per video input
3000BHP-U	1RU breakout bulkhead panel to support either balanced stereo analog inputs or balanced AES/EBU audio
3000BHP-BAL	2RU breakout bulkhead panel to support either balanced stereo analog inputs or balanced AES/EBU audio
3000BHP-AUX	Breakout bulkhead panel for GPI/O, LTC input and serial communications
7700PTX-MVP	Protocol Translator - Connect multiple serial input devices to MVP™
3000MKT-AUX	Rackmount panel for AUX breakout board
2430GDAC	G-LINK™ to DVI converter
2430GDAC-WARP	G-LINK™ to DVI converter, with 90° display rotation support
3000DCP	Allows you to change your display's presets from numerous possibilities
3000MVP-OE/EO-5	P-LINK™/G-LINK™ Optical to Electrical/Electrical to Optical converter

7767 VIP

Compact Multi-Image Display Processor

The VIP™ provides a feature-rich yet cost-effective signal monitoring and display solution displaying up to WUXGA (1920x1200) resolution. It accepts up to 12 inputs and conveniently fits into Evertz® widely-installed 7700FR-C universal 3RU frame (or 1RU option).

With auto-sensing HD, SD and NTSC/PAL on the same BNC, as well as configurable presets and a separate background DVI-I input, the VIP™ is a compact video and graphic solution ideally suited for dedicated signal monitoring applications with limited rack space and/or number of signals.

Key VIP Features & Benefits

- Accepts up to 4 (VIP4), 8 (VIP8) or 12 (VIP12) video inputs with embedded audio or optional discrete audio
- Auto-sensing HD/SD and NTSC/PAL inputs
- Plus additional computer input for dynamically updated backgrounds
- Output display up to WUXGA (1920x1200) resolution or HD/SD serial output & optional fiber output
- User-configurable display presets, borders, tallys and UMDs
- Module conveniently fits into Evertz® widely-installed, universal 7700FR-C frame (3RU)
- Thumbnails of any or all selected inputs
- VistaLINK® - capable for configuration and monitoring via SNMP
- Modules are cascadable for more inputs to a single display
- Up to 40 signals in a 3RU frame
- Internal routing of selected video and audio channels

Key VIP Applications

- OB outside broadcast
- PCR production control
- MCR master control
- TOC technical operation centers
- Head-end cable
- IPTV head-end
- Satellite head-end
- Digital Signage
- Command & control
- Security & surveillance
- Remote monitoring

VIP™ modules are also VistaLINK® - capable, offering remote monitoring, control and configuration capabilities via Simple network Management Protocol (SNMP) from Evertz® own VistaLINK® PRO or a third party NMS.

Production Display Solution

- Auto-sensing HD, SD and NTSC inputs
  - includes 23.98sF or 24psF
- Eliminates color matching of numerous monitors
- Provides an HD-SDI output
  - 720p, 1080i, or 1920x1080p over DVI at 50 or 60Hz)
- User-controlled and positionable on-screen display elements
- Easily select any single input to a full resolution output

Integrated Solutions

- Built-in video, audio and data signal monitoring
- Integrated thumbnail output from selectable inputs
- Additional computer input
  - Allows for dynamically updated background images
- VistaLINK® - capable for configuration and monitoring

Compact Video & Graphic Display Solution

- Compact 1RU unit
- 4x composite analog or 4x S-Video and 4x DVI-I inputs
  - a total of 8 inputs on a single display
- Additional background DVI-I input
- Freely position windows
- Add various on-screen graphic display elements
- Front panel control for preset selection

7767 VIP

Compact Multi-Image Display Processor

General Display & Monitoring

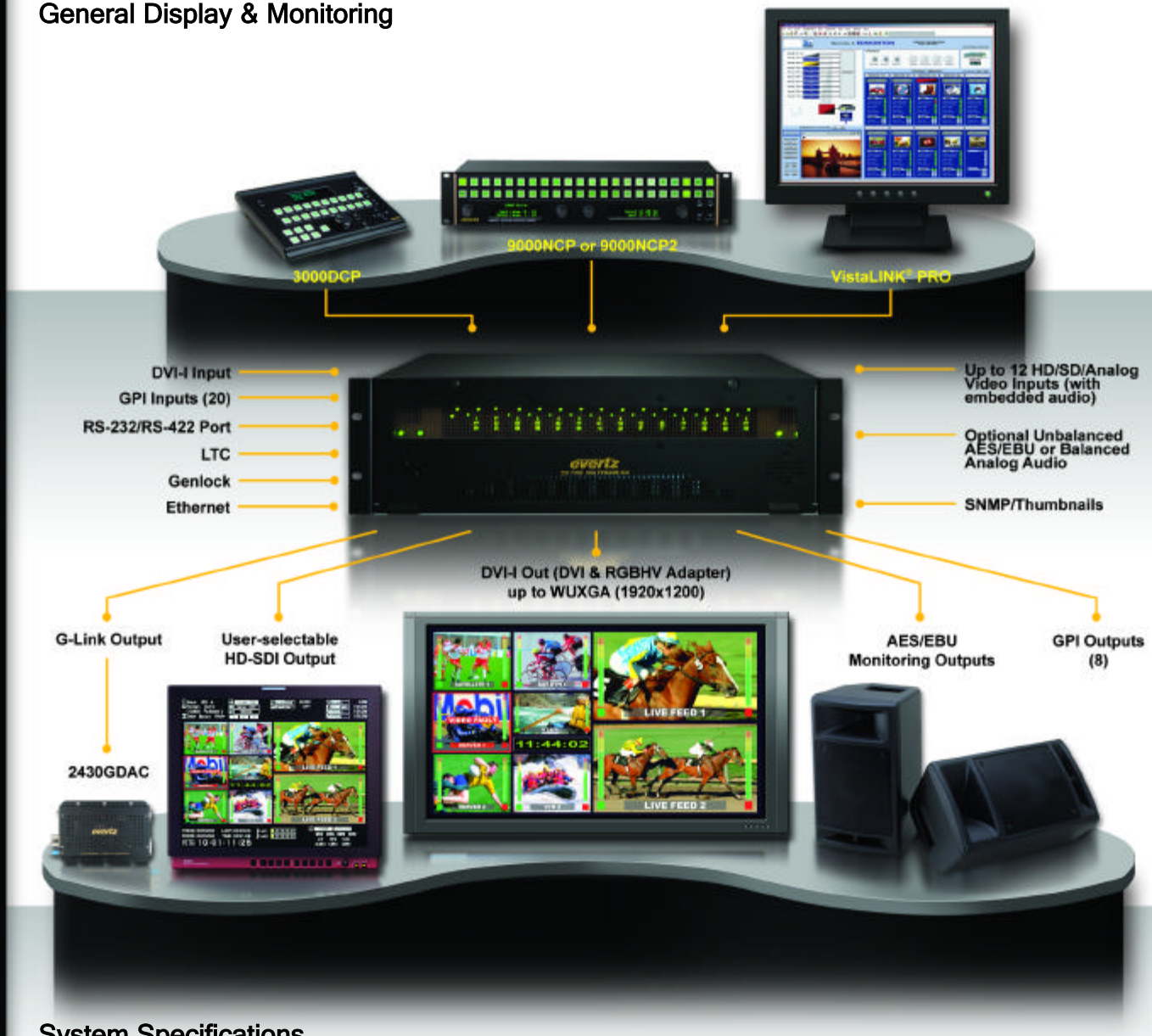

System Specifications

Auto-Detecting Video Inputs:

Analog Video: NTSC/PAL

Digital Video: SD-SDI (SMPTE 259M-C)
HD-SDI (SMPTE 292M, 1.5Gb/s)
Built-in embedded audio extraction (up to 2 groups)

HD Formats: 1080i/60, 1080i/59.94, 1080i/50, 1080p/24sF, 1080p/23.98sF, 720p/60, 720p/59.94, 480p/60, 480p/59.94

Computer Graphic Video Inputs:
From 640x480 (VGA) to 1600x1200 (UXGA) resolution
DVI or 15-pin D-sub via adapter

Audio:
Unbalanced AES
Balanced analog stereo
On-screen display of level & phase bars
Audio monitoring output, 1 group (AES/EBU)

Video Outputs:
Single output support for XGA up to WUXGA resolution
DVI-I connector, BNC and/or fiber interfaces (module dependent)

Frame:
3RU, 15-module agnostic slots
Rack-mountable
Front access, modules & power supply units

AUX Inputs/Outputs:
Up to 20 GPI inputs & 8 GPI outputs (GPO) - 16 GPI on 7767BHP-AUX
LTC for clock/timer reference
RS-232/422 serial interface

Configuration Control:
Maestro™ VIP™ graphic interface

Electrical:
Dual redundant power supplies with spearate AC inlets
Auto-ranging voltage, 100-240V AC, 50/60Hz

Genlock:
Separate NTSC (SMPTE 170M) and PAL (ITU624-4), color black via BNC

Front Panel Indicators:
PSU status LED & local error/failure LED

In addition to multi-display processors and signal monitoring solutions, Evertz® offers a number of discrete input signal monitoring and display solutions. All have built-in user-configurable signal monitoring fault notification features, fit conveniently into the 3RU 7700FR-C frame, and are VistaLINK® - capable for monitoring & configuration.

Quattro™ & Analog Quattro™

- 4 SDI/601 525 line or 625 line, 270Mb/s component digital video inputs
- Embedded audio on 7765AVM-4 versions
- Embedded or external AES/EBU audio on 7765AVM-4A versions
- 4 composite analog (NTSC/PAL auto-detecting) inputs (BNC type)
- 4 optional S-Video inputs
- Quad-split or full-screen output mode with UMDs, fault monitoring, SNMP output to HD, SDI NTSC/PAL and computer displays

Dual Channel Composite Analog

- 2 independent composite analog (NTSC/PAL) video or S-video inputs
- Decodes vertical interval time code (VITC), VBI source ID and Closed Captioning into the picture
- Provides peak video (Average Picture Level) and black level status and fault monitoring
- Flexible configuration of on-screen text and audio bar graph information displays

SDI Video & Audio Monitor/Conversion

- 1 SDI 525 or 625, 270Mb/s component digital video input
- 4 adjustable analog audio outputs available for content monitoring
- Decodes & monitors Video Indexing, AFD, subtitle and teletext
- An extensive list of error conditions can be monitored
- Fault conditions can be configured from these errors

- 1 HD/SD serial digital video input and 1 reclocked HD/SD output
- Decodes vertical interval time code (VITC) and Source ID burning, burning it into the picture
- Decodes & monitors Video Indexing, AFD, and subtitle
- An extensive list of error conditions can be monitored
- Fault conditions can be configured from these errors

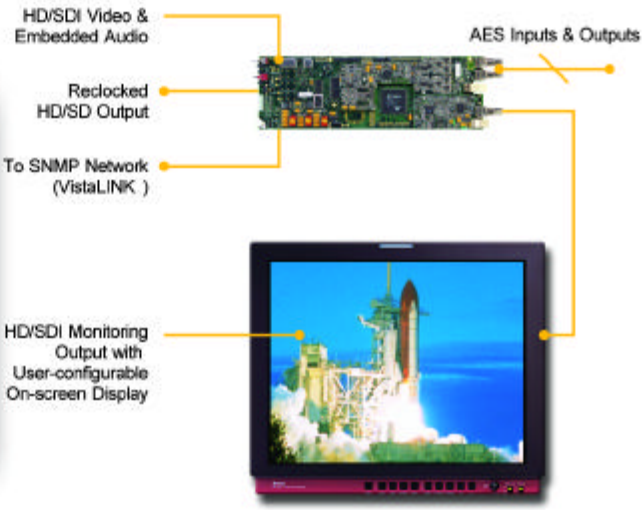

Ordering Information

7765AVM-4-X	Quattro™, 4 SDI video quad split display with digital audio monitoring (embedded & discrete audio options)
7765AVM-4A-X	Quattro™, 4 SDI video quad split display with digital audio monitoring (embedded & discrete audio options)
7766AVM-4A-X	Analog Quattro™, 4 composite analog video (BNC) and analog audio monitoring
7761AVM2-X	Dual channel video & analog audio monitoring; dual output
7760AVM2	SDI video & audio monitor/conversion with on-screen display (single slot) with Teletext subtitle decoder
7767AVM2-HD	HD video & audio monitor/conversion with on-screen display (single slot)

The Evertz 2007/2008 catalogue features a new series of quick-reference icons located in the margin on the upper corner of each product page. The icons have been designed to quickly illustrate the primary characteristics of individual products, including products that are VistaLINK® - capable, ThumbLINK™ - enabled, have Dolby E & Dolby Digital capabilities and are compatible with Evertz ***exponent*** frames..

VistaLINK®

VistaLINK® offers remote monitoring, control and configuration capabilities via Simple Network Management Protocol (SNMP), giving the flexibility to manage operations, including signal monitoring and module configuration, from SNMP - capable control systems (Manager or NMS).

ThumbLINK™

ThumbLINK™ - enabled products give you the ability to monitor and configure via SNMP and also to get thumbnails back to the new VistaLINK® Thumbnail Server. Thumbnails can be viewed in separate windows or embedded into custom user-designed Graphics Client UI screens.

Dolby E Partner

The Dolby icon indentifies products that can process Dolby E or Dolby Digital audio data. Products can include Audio Embedders, Audio De-embedders, Audio Mixers, Frame Sychronizers, Dolby Encoders, Dolby Decoders and more. The icon may exist across all Evertz platforms including 7700 and 500 exponent series modules.

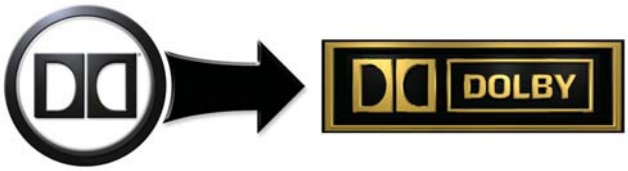

Exponent

*Evertz **exponent** products include the 500FR and S501FR Compact High Density Distribution Frames, as well as a wide variety of 500 series modular products that are housed within the 500FR series frames.*

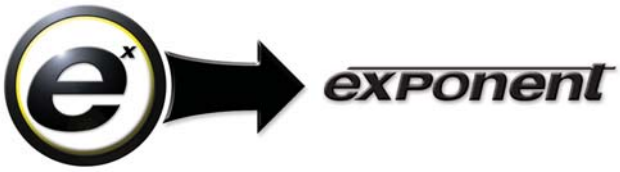

7767VIP4-HSN, 7767VIP4-HSN-G & 7767VIP4-SN

VIP™ Four Input Video Monitoring & Display

Building on the popularity of the MVP™ series, Evertz new 7767VIP4 signal monitoring module simultaneously accepts, auto-detects, analyzes and displays four synchronous or asynchronous HD/SD/Analog video signals. An additional fifth input is a computer graphic input for display of a dynamic background image. Ultimately displaying up to WUXGA (1920x1200) resolution, the 7767VIP4 module fits conveniently into Evertz universally installed 7700FR-C frame and provides a cost-effective and space-efficient signal monitoring and display solution.

The 7767VIP4 module is VistaLINK® - capable, offering remote monitoring, control and configuration capabilities via Simple Network Management Protocol (SNMP). This product feature offers another solution to manage operations including signal monitoring & module configuration from SNMP - capable control systems (Manager or NMS) locally or remotely.

Features & Benefits

Video Inputs
- Up to four auto-sensing HD/SD/NTSC/PAL inputs (same BNC)
- Accepts either 4:3 or 16:9
- Auto-detects 525/625 format SD inputs (single frame rate conversion)
- Computer graphic input, (DVI-I up to UXGA resolution) source is used for background display or for cascading multiple VIP modules together. Also can be used in place of the last video input as a scaled source

Audio Inputs
- Handles embedded, discrete unbalanced AES/EBU, and balanced analog audio (up to 16 AES and 4 L/R) via break-out panel
- VU/PPM level indicators

Video Output
- One DVI-I output: Drive a single DVI-D and a single RGBHV (VGA-type) display simultaneously with same content up to WUXGA (1920x1200 resolution)
- One selectable HD/SD serial digital (BNC) video output, same content as DVI-I output, or select from input
- Minimal processing delay (~1 frame)
- Optional fiber output (-G option)
- Optional support for "portrait" display via 2430GDAC-WARP
- Thumbnails of any or all selected inputs to VistaLINK® PRO thumbnail server (or equivalent)

Graphics
- User-configurable tally indicators and configurable UMD static and/or dynamically updated text, background colors
- User-configurable borders
- LTC input drives digital clock display
- Count-up or count-down timer displays (GPI triggered)

Signal Monitoring
- Extensive list of user-configurable signal fault conditions with "logic" settings
- Detects frozen video (patent pending) and black video
- User-configurable fault condition alert messages per video input with configurable background colors, thresholds and duration settings
- Closed caption presence detection

Auxiliary Inputs
- RS-232/RS-422 communication port interface to common UMD protocols - TSL, Image Video
- 20 assignable general purpose inputs, 8 general purpose outputs

Physical
- Number of slots - 3
- Genlock reference loop input for proper timing - 1 NTSC/PAL
- Fast power-cycle time (< 30 seconds)

Network Management
- Built-in VistaLINK® support for remote monitoring and control via SNMP (using VistaLINK® PRO)
- The 7767VIP module does not require a 7700FC VistaLINK® Frame Controller
- A direct Ethernet connection to the network for VistaLINK® operations must be provided by user
- Screen configurations via Maestro-VIP™ GUI software (included)
- Web browser interface allows for simple configuration without the need for additional software

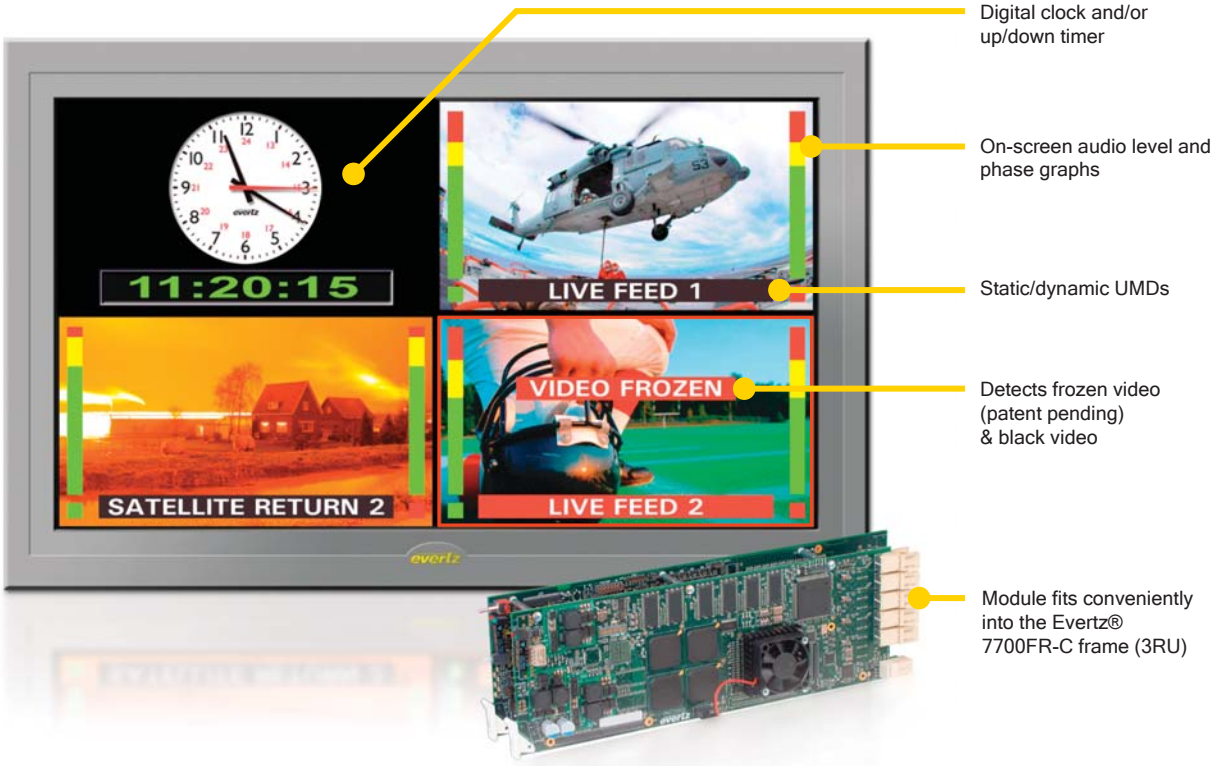

7767VIP4-HSN, 7767VIP4-HSN-G & 7767VIP4-SN

VIP™ Four Input Video Monitoring & Display

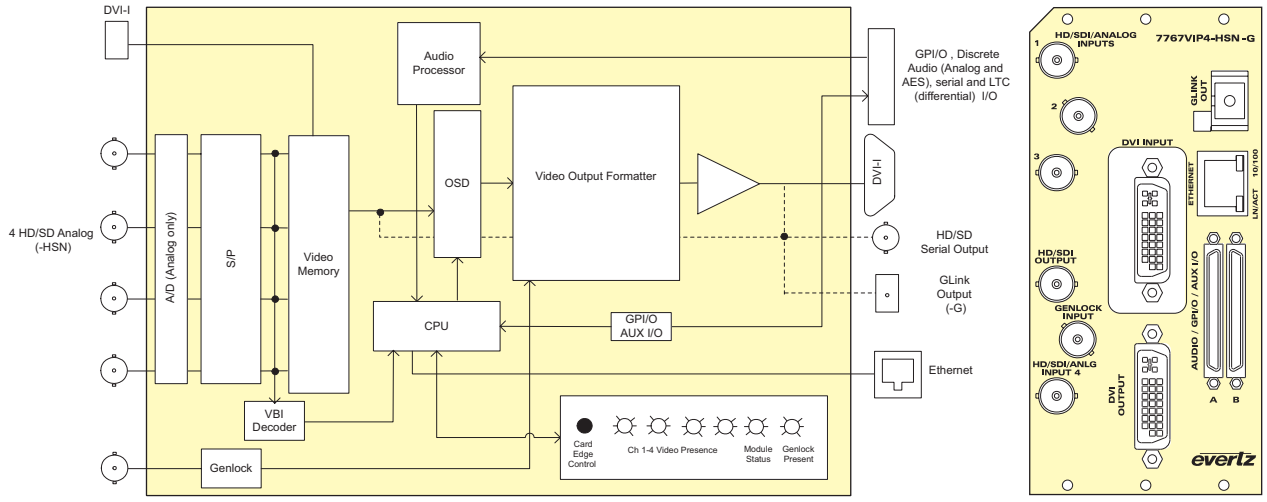

Specifications

Serial Video Inputs:
Standard: Auto-sensing HD-SDI (SMPTE 292M), SD-SDI (SMPTE 259M-C)
Number of Inputs: Up to 4
Connector: BNC per IEC 60169-8 Amendment 2
Equalization: Automatic to 100m (Belden 1694A)
Return Loss: > 15dB up to 270Mb/s
Embedded Audio: SMPTE 272M-A

Composite Analog Video Inputs:
Standard: NTSC (SMPTE 170M), PAL (ITU624-4)
Number of Inputs: Up to 4
Connector: BNC per IEC 60169-8 Amendment 2
Signal Level: 1V nominal
DC Offset: 0V ±0.1V
Input Impedance: 75Ω
Return Loss: 40dB up to 5MHz

Background (Computer) Video Input:
Standard: Auto-detecting, VESA (DVI-I, for DVI and RGBHV inputs)
Number of Inputs: 1
Connector: DVI-I (Female)
Input Resolution: 640x480 (VGA) to 1600x1200 (UXGA)
Signal Level: 1V nominal

Discrete Digital AES Audio Inputs:
Standard: SMPTE 276M
Number of Inputs: 4 AES per video input
Connector: Dual SCSI (F)
Resolution: 24-bit
Sampling Rate: 48kHz
Impedance: 75Ω unbalanced

Discrete Analog Audio Inputs:
Number of Inputs: 12 balanced stereo audio pairs
Connector: Dual SCSI (F)
Input Impedance: 20 kΩ minimum (differential)
Sampling Frequency: 48kHz
Peak Signal and Common Mode Level: 30dBu

Display Video Output:
Standard: VESA (DVI-I) up to WUXGA (1920x1200)
Number of Outputs: 1
Connector: DVI (with DVI to RGBHV Adapter)
Video: 1V p-p YPrPb/RGB or 0.7V p-p VGA, 60Hz refresh
Impedance: 75Ω

Serial Video Output:
Standard: Selectable HD/SD serial monitoring output (720p, 1080i, 625i, 525i)
Number of Outputs: 1
Connector: BNC per IEC 60169-8 Amendment 2
Signal Level: 800mV nominal
DC Offset: 0V ±0.5V
Rise and Fall Time: 200ps nominal (HD), 740ps nominal (SD)
Overshoot: < 10% of amplitude

Genlock Input:
Type: NTSC/PAL color black
Level: 1V p-p nominal
Connector: BNC per IEC 60169-8 Amendment 2

General Purpose Interface I/O (GPI/GPO):
Number of Inputs: 20 (16 via 7767BHP-AUX breakout panel)
Number of Outputs: 8
Type:
GPI: Opto-isolated, active low with internal pull-ups to +5V
GPO: Relay closure to ground
Connector: Breakout panel TBlocks via SCSI connection to dual SCSI (F)
Input Signal: Closure to ground

Data Input/Output Serial Port:
Number of Ports: 1 RS-232 or 1 RS-422
Connector: Breakout panel TBlocks via SCSI connection to dual SCSI (F)
Baud Rate: Up to 1Mbaud
Format: Configurable for various UMD interfaces

Ethernet:
Network Type: Fast Ethernet 100 Base-TX 1EEE 802.3U standard for 100Mb/s baseband CSMA/CD local area network
Connector: RJ-45

Electrical:
Voltage: +12V DC
Safety: ETL Listed, complies with EU low voltage directive
Power: < 34W
EMI/RFI: Complies with FCC Part 15, Class A EU EMC Directive

Physical:
Number of Slots: 3

Ordering Information

7767VIP4-HSN	Up to four asynchronous HD/SD/NTSC/PAL inputs with embedded audio, one background DVI-I (DVI-D or RGBHV with adapter) input. Single DVI-I (DVI-D or RGBHV with adapter) or one serial monitor output. Includes VistaLINK® VLPRO-C software configuration tool, GPI/O break-out panel (BHP-AUX) and Maestro-VIP™ display layout GUI.
7767VIP4-HSN-G	With single built-in fiber output (requires 2430GDAC on Rx end to display)
7767VIP4-SN	Up to four asynchronous SD/NTSC/PAL inputs with embedded audio, one background DVI-I (DVI-D or RGBHV with adapter) input. Single DVI-I (DVI-D or RGBHV with adapter) or one serial monitor output. Includes VistaLINK® VLPRO-C software configuration tool, GPI/O break-out panel (BHP-AUX) and Maestro-VIP™ display layout GUI.

Ordering Options Rear Plate must be specified at time of order
Eg: Model +3RU

Rear Plate Suffix
+3RU 3RU Rear Plate for use with 7700FR-C Multiframe
+SA Rear Plate for Standalone

Accessories
2430GDAC GLink to DVI converter (extender requires -G module)
2430GDAC-WARP GLink to DVI converter (extender and portrait mode display, requires -G module)
7767VIP-AI-U Discrete unbalanced AES/EBU audio input (4 AES per video input) support with breakout panel
7767VIP-AI-BAL Discrete balanced analog audio input support with breakout panel
3000MKT-AUX Dual BHP-AUX auxiliary GPI/O and serial break-out panel rack mounting kit

Enclosures
7700FR-C 3RU Multiframe which holds up to 15 single slot modules
7702FR Standalone enclosure

7767VIP8-HSN, 7767VIP8-HSN-G & 7767VIP8-SN

VIP™ Eight Input Video Monitoring & Display

Building on the popularity of the MVP™ series, Evertz new 7767VIP8-HSN signal monitoring module simultaneously accepts, auto-detects, analyzes and displays eight synchronous or asynchronous HD/SD/Analog video signals. An additional ninth input is a computer graphic input for display of a dynamic background image. Ultimately displaying up to WUXGA (1920x1200) resolution, the 7767VIP8-HSN module fits conveniently into Evertz universally installed 7700FR-C frame and provides a cost-effective and space-efficient signal monitoring and display solution.

The 7767VIP8-HSN module is VistaLINK® - capable, offering remote monitoring, control and configuration capabilities via Simple Network Management Protocol (SNMP). This product feature offers another solution to manage operations including signal monitoring and module configuration from SNMP - capable control systems (Manager or NMS) locally or remotely.

Features & Benefits

Video Inputs
- Up to eight auto-sensing HD/SD/NTSC/PAL inputs (same BNC)
- Accepts either 4:3 or 16:9
- Auto-detects 525/625 format SD inputs (single frame rate conversion)
- Computer graphic input, (DVI-I up to UXGA resolution) source is used for background display or for cascading multiple VIP modules together also can be used in place of the last video input as a scaled source

Audio Inputs
- Handles embedded, discrete unbalanced AES/EBU, and balanced analog audio via break-out panel
- VU/PPM level indicators

Video Output
- One DVI-I output - Drive a single DVI-D and a single RGBHV (VGA-type) display simultaneously with same content up to WUXGA (1920x1200 resolution)
- One selectable HD/SD serial digital (BNC) video output, same content as DVI-I output, or select from input
- Minimal processing delay (~1 frame)
- Optional fiber output
- Optional support for “portrait” display via 2430GDAC-WARP
- Thumbnails of any or all selected inputs to VistaLINK® PRO thumbnail server (or equivalent)

Graphics
- User-configurable tally indicators and configurable UMD static and/or dynamically updated text, background colors
- User-configurable borders
- LTC input drives digital clock display
- Count-up or count-down timer displays (GPI triggered)

Signal Monitoring
- Extensive list of user-configurable signal fault conditions with “logic” settings
- Detects frozen video (patent pending) and black video
- User-configurable fault condition alert messages per video input with configurable background colors, opacities, thresholds and duration settings
- Closed caption presence detection
- WSS/AFD detection

Auxiliary Inputs
- RS-232/RS-422 communication port interface to common UMD protocols - TSL, Image Video
- 20 assignable GP inputs, 8 GP outputs

Physical
- Number of slots - 3
- Genlock reference loop input for proper timing - 1 NTSC/PAL
- Fast power-cycle time (< 30 seconds)

Network Management
- Built-in VistaLINK® support for remote monitoring and control via SNMP (using VistaLINK® PRO)
- The 7767VIP module does not require a 7700FC VistaLINK® Frame Controller
- A direct Ethernet connection to the network for VistaLINK® operations must be provided by user
- Screen configurations via Maestro-VIP™ GUI software (included)
- Web browser interface allows for simple configuration without the need for additional software

Accepts either 4:3 or 16:9 aspect ratios

Simultaneously accepts, auto-detects, analyzes and displays eight synchronous or asynchronous HD/SD/Analog video signals

Module fits conveniently into the Evertz® 7700FR-C frame (3RU)

7767VIP8-HSN, 7767VIP8-HSN-G & 7767VIP8-SN

VIP™ Eight Input Video Monitoring & Display

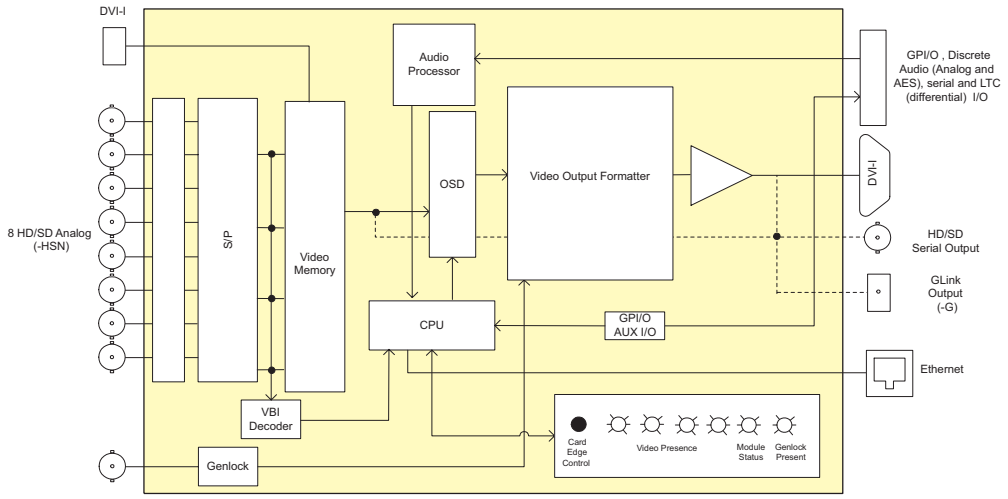

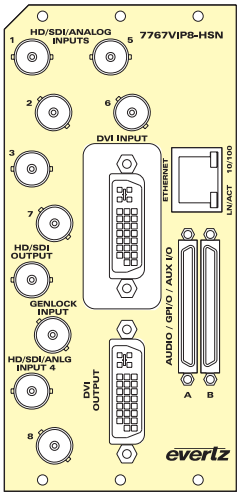

Specifications

Serial Video Inputs:
Standard: Auto-sensing HD-SDI (SMPTE 292M), SD-SDI (SMPTE 259M-C)
Number of Inputs: Up to 8
Connector: BNC per IEC 60169-8 Amendment 2
Equalization: Automatic to 100m (Belden 1694A) HD-SDI
Return Loss: > 15dB up to 270Mb/s
Embedded Audio: SMPTE 272M-A

Composite Analog Video Inputs:
Standard: NTSC (SMPTE 170M), PAL (ITU624-4)
Number of Inputs: Up to 8
Connector: BNC per IEC 60169-8 Amendment 2
Signal Level: 1V nominal
DC Offset: 0V ±0.1V
Input Impedance: 75Ω
Return Loss: 40dB up to 5MHz

Background (Computer) Video Input:
Standard: Auto-detecting, VESA (DVI-I, for DVI and RGBHV inputs)
Number of Inputs: 1
Connector: DVI-I (Female)
Input Resolution: 640x480 (VGA) to 1600x1200 (UXGA)
Signal Level: 1V nominal

Discrete Digital AES Audio Inputs:
Standard: SMPTE 276M
Number of Inputs: 4 AES per video input
Connector: Dual SCSI (F)
Resolution: 24-bit
Sampling Rate: 48kHz
Impedance: 75Ω unbalanced

Discrete Analog Audio Inputs:
Number of Inputs: 12 balanced stereo audio pairs
Connector: Dual SCSI (F)
Input Impedance: 20kΩ minimum (differential)
Sampling Frequency: 48kHz
Peak Signal and Common Mode Level: 30dBu

Display Video Output:
Standard: VESA (DVI-I) up to WUXGA (1920x1200)
Number of Outputs: 1
Connector: DVI (with DVI to RGBHV Adapter)
Video: 1V p-p YPrPb/RGB or 0.7V p-p VGA, 60Hz refresh
Impedance: 75Ω

Serial Video Output:
Standard: Selectable HD/SD serial monitoring output (720p, 1080i, 625i, 525i)
Number of Outputs: 1
Connector: BNC per IEC 60169-8 Amendment 2
Signal Level: 800mV nominal
DC Offset: 0V ±0.5V
Rise and Fall Time: 200ps nominal (HD), 740ps nominal (SD)
Overshoot: < 10% of amplitude

Genlock Input:
Type: NTSC/PAL color black
Level: 1V p-p nominal
Connector: BNC per IEC 60169-8 Amendment 2

General Purpose Interface I/O (GPI/GPO):
Number of Inputs: 20 (16 via 7767BHP-AUX breakout panel)
Number of Outputs: 8
Type:
GPI: 1 Opto-isolated, active low with internal pull-ups to +5V
GPO: 1 Relay closure to ground
Connector: Breakout panel TBlocks via SCSI connection to dual SCSI (F)
Input Signal: Closure to ground

Data Input/Output Serial Port:
Number of Ports: 1 RS-232 or 1 RS-422
Connector: Breakout panel TBlocks via SCSI connection to dual SCSI (F)
Baud Rate: Up to 1Mbaud
Format: Configurable for various UMD interfaces

Ethernet:
Network Type: Fast Ethernet 100 Base-TX 1EEE 802.3U standard for 100Mb/s baseband CSMA/CD local area network
Connector: RJ-45

Electrical:
Voltage: +12V DC
Power: < 39W
Safety: ETL Listed, complies with EU safety directives
EMI/RFI: Complies with FCC Part 15, Class A EU EMC Directive

Physical:
Number of Slots: 3

Ordering Information

7767VIP8-HSN Up to eight asynchronous HD/SD/NTSC/PAL inputs with embedded audio, one background DVI-I (DVI-D or RGBHV with adapter) input. Single DVI-I (DVI-D or RGBHV with adapter) or one serial monitor output. Includes VistaLINK® VLPRO-C software configuration tool, GPI/O break-out panel (BHP-AUX) and Maestro-VIP™ display layout GUI.

7767VIP8-HSN-G Up to eight asynchronous HD/SD/NTSC/PAL inputs with embedded audio, one background DVI-I (DVI-D or RGBHV with adapter) input. Single DVI-I (DVI-D or RGBHV with adapter) or one serial monitor output. Includes VistaLINK® VLPRO-C software configuration tool, GPI/O break-out panel (BHP-AUX) and Maestro-VIP™ display layout GUI. Single built-in fiber output (requires 2430GDAC on Rx end to display).

7767VIP8-SN Up to eight asynchronous SD/NTSC/PAL inputs with embedded audio, one background DVI-I (DVI-D or RGBHV with adapter) input. Single DVI-I (DVI-D or RGBHV with adapter) or one serialmonitor output. Includes VistaLINK® VLPRO-C software configuration tool, GPI/O break-out panel (BHP-AUX) and Maestro-VIP™ display layout GUI.

Ordering Options Rear Plate must be specified at time of order
Eg: Model +3RU

Rear Plate Suffix
+3RU 3RU Rear Plate for use with 7700FR-C Multiframe
+SA Rear Plate for Standalone

Accessories
2430GDAC GLink to DVI converter (extender requires -G module)
2430GDAC-WARP GLink to DVI converter (extender and portrait mode display, requires -G module)
7767VIP-AI-U Discrete unbalanced AES/EBU audio input (4 AES per video input) support with breakout panel
7767VIP-AI-BAL Discrete balanced analog audio input support with breakout panel
3000MKT-AUX Dual BHP-AUX auxiliary GPI/O and serial break-out panel rack mounting kit

Enclosures
7700FR-C 3RU Multiframe which holds up to 15 single slot modules
7702FR Standalone enclosure

7767VIP12-HSN, 7767VIP12-HSN-G & 7767VIP12-SN

VIP™ Twelve Input Video Monitoring & Display

Building on the popularity of the MVP™ series, Evertz new 7767VIP12 signal monitoring module simultaneously accepts, auto-detects, analyzes and displays twelve synchronous or asynchronous HD/SD/Analog video signals. Ultimately displaying up to WUXGA (1920x1200) resolution, the 7767VIP12 module fits conveniently into Evertz universally installed 7700FR-C frame, and provides a cost-effective and space-efficient signal monitoring and display solution.

The 7767VIP12 module is VistaLINK® - capable, offering remote monitoring, control and configuration capabilities via Simple Network Management Protocol (SNMP). This product feature offers another solution to manage operations including signal monitoring and module configuration from SNMP-capable control systems (Manager or NMS) locally or remotely.

Features & Benefits

Video Inputs
- Twelve auto-sensing HD/SD/analog video inputs
- Accepts either 4:3 or 16:9
- Auto-detects 525/625 format SD inputs (single frame rate conversion)
- Computer graphic input, (DVI-I up to UXGA resolution) source is used for background display or for cascading multiple VIP modules together also can be used in place of the last video input as a scaled source

Audio Inputs
- Handles embedded or unbalanced AES/EBU, and balanced analog audio (up to 48 AES and 12 L/R) via break-out panel
- VU/PPM level indicators

Video Output
- One DVI-I output - Drive a single DVI-D and a single RGBHV (VGA-type) display simultaneously with same content up to WUXGA (1920x1200 resolution)
- One selectable HD/SD serial digital (BNC) video output, also carrying same content as DVI-I output or select from input
- Minimal processing delay (~1 frame)
- Optional fiber output
- Optional support for “portrait” display via 2430GDAC-WARP
- Thumbnails of any or all selected inputs to VistaLINK® PRO Thumbnail Server (or equivalent)

Graphics
- User-configurable tally indicators and configurable UMD static and/or dynamically updated text, background colors
- User-configurable borders
- LTC input drives digital clock display
- Count-up or down timer displays (GPI triggered)

Signal Monitoring
- Extensive list of user-configurable signal fault conditions with logic settings
- On-screen messages triggered by fault conditions
- Detects frozen video (patent pending) and black video
- User-configurable fault condition alert messages per video input with configurable background colors, opacities, thresholds and durations
- Closed caption presence detection

Auxiliary Inputs
- RS-232/RS-422 communication port Interface to common UMD protocols - TSL, Image Video
- 20 assignable GP inputs, 8 GP outputs

Physical
- Number of slots - 4
- Genlock reference loop input for proper timing - 1 NTSC/PAL
- Fast power-cycle time (< 3 seconds)

Network Management
- Built-in VistaLINK® support for remote monitoring and control via SNMP (using VistaLINK® PRO)
- The 7767VIP module does not require a 7700FC VistaLINK® Frame Controller
- A direct Ethernet connection to the network for VistaLINK® operations must be provided by user
- Screen configurations via Maestro-VIP™ GUI software (included)
- Web browser interface allows for simple configuration without the need for additional software

Extensive list of user-configurable signal fault conditions with logic settings

Simultaneously accepts, auto-detects, analyzes and displays twelve synchronous or asynchronous HD/SD/Analog video signals

Module fits conveniently into the Evertz® 7700FR-C frame (3RU)

7767VIP12-HSN, 7767VIP12-HSN-G & 7767VIP12-SN

VIP™ Twelve Input Video Monitoring & Display

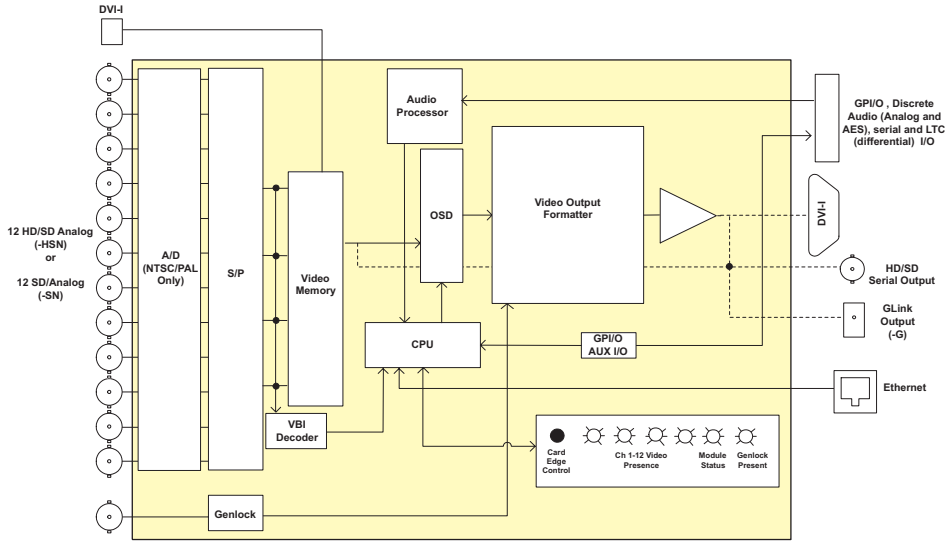

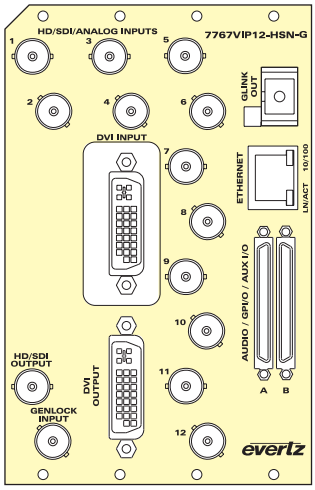

Specifications

Serial Video Inputs:
Standard: HD-SDI (SMPTE 292M), and/or SD-SDI (SMPTE259M-C)
Number of Inputs: 12
Connector: BNC per IEC 60169-8 Amendment 2
Equalization: Automatic to 100m (Belden 1694A)
Return Loss: > 15dB up to 270Mb/s
Embedded Audio: SMPTE 272M-A

Composite Analog Video Inputs:
Standard: NTSC (SMPTE 170M), PAL (ITU624-4)
Number of Inputs: 12
Connector: BNC per IEC 60169-8 Amendment 2
Signal Level: 1V nominal
DC Offset: 0V ±0.1V
Input Impedance: 75Ω
Return Loss: 40dB up to 5MHz

Background (Computer) Video Input:
Standard: Auto-detecting, VESA (DVI-I, for DVI and RGBHV inputs)
Number of Inputs: 1
Connector: DVI-I (Female)
Input Resolution: 640x480 (VGA) to 1600x1200 (UXGA)
Signal Level: 1V nominal

Discrete Digital AES Audio Inputs:
Standard: SMPTE 276M
Number of Inputs: 4 AES per video input
Connector: Dual SCSI (F) with BHP
Resolution: 24-bit
Sampling Rate: 48kHz
Impedance: 75Ω unbalanced

Discrete Analog Audio Inputs:
Number of Inputs: 12 balanced stereo audio pairs
Connector: Dual SCSI (F) with BHP
Input Impedance: 20kΩ min. (differential)
Sampling Frequency: 48kHz
Peak Signal and Common Model Level: 30dBu

Display Video Output:
Standard: VESA (DVI-I) up to WUXGA (1920x1200)
Number of Outputs: 1
Connector: DVI (with DVI to RGBHV Adapter)
Video: 1V p-p YPrPb/RGB or 0.7V p-p VGA, 60Hz refresh
Impedance: 75Ω

Serial Video Output:
Standard: Selectable HD/SD serial monitoring output (720p, 1080i, 625i, 525i)
Number of Outputs: 1
Connector: BNC per IEC 60169-8 Amendment 2
Signal Level: 800mV nominal
DC Offset: 0V ±0.5V
Rise and Fall Time: 200ps nominal (HD), 740ps nominal (SD)
Overshoot: < 10% of amplitude

Genlock Input:
Type: NTSC/PAL color black
Level: 1V p-p nominal
Connector: BNC per IEC 60169-8 Amendment 2

General Purpose Interface I/O (GPI/GPO):
Number of Inputs: 20 (16 on 7767BHP-AUX)
Number of Outputs: 8
Type:
GPI: 1 Opto-isolated, active low with internal pull-ups to +5V
GPO: 1 Relay closure to ground
Connector: Breakout panel TBlocks via SCSI connection to dual SCSI (F)
Input Signal: Closure to ground

Input/Output Serial Port:
Number of Ports: 1 RS-232 or 1 RS-422
Connector: Breakout panel TBlocks via SCSI connection to dual SCSI (F)
Baud Rate: Up to 1Mbaud
Format: Configurable for various UMD interfaces

Ethernet:
Network Type: Fast Ethernet 100 Base-TX 1EEE 802.3U standard for 100Mbps baseband CSMA/CD local area network
Connector: RJ-45

Electrical:
Voltage: +12V DC
Power: < 50W

EMI/RFI: Complies with FCC Part 15, Class A EU EMC Directive

Physical:
Number of Slots: 4

Ordering Information

7767VIP12-HSN Up to twelve asynchronous HD/SD/NTSC/PAL inputs with embedded audio, one background DVI-I (DVI-D or RGBHV with adapter) input. Single DVI-I (DVI-D or RGBHV with adapter) or one serial monitor output. Includes VistaLINK® VLPRO-C software configuration tool, GPI/O break-out panel (BHP-AUX) and Maestro-VIP™ display layout GUI.

7767VIP12-HSN-G Up to twelve asynchronous HD/SD/NTSC/PAL inputs with embedded audio, one background DVI-I (DVI-D or RGBHV with adapter) input. Single DVI-I (DVI-D or RGBHV with adapter) or one serial monitor output. Includes VistaLINK® VLPRO-C software configuration tool, GPI/O break-out panel (BHP-AUX) and Maestro-VIP™ display layout GUI. Single built-in fiber output (requires 2430GDAC on Rx end to display).

7767VIP12-SN Up to twelve asynchronous SD/NTSC/PAL inputs with embedded audio, one background DVI-I (DVI-D or RGBHV with adapter) input. Single DVI-I (DVI-D or RGBHV with adapter) or one serial monitor output. Includes VistaLINK® VLPRO-C software configuration tool, GPI/O break-out panel (BHP-AUX) and Maestro-VIP™ display layout GUI.

Ordering Options Rear Plate must be specified at time of order
Eg: Model +3RU

Rear Plate Suffix
+3RU 3RU Rear Plate for use with 7700FR-C Multiframe

Accessories
2430GDAC GLink to DVI converter (extender requires -G module)
2430GDAC-WARP GLink to DVI converter (extender and portrait mode display, requires -G module)
7767VIP-AI-U Discrete unbalanced AES/EBU audio input (4 AES per video input) support with breakout panel
7767VIP-AI-BAL Discrete balanced analog audio input support with breakout panel
3000MKT-AUX Dual BHP-AUX auxiliary GPI/O and serial break-out panel rack mounting kit

Enclosures
7700FR-C 3RU Multiframe which holds up to 15 single slot modules

9767VIP8-NGI

VIP™ Four Video & Four Graphic Input Monitoring & Display Unit

The 9767VIP8-NGI takes the popular VIP™ series of multi-image display processor and controller and combines video and graphics into one, and displays up to 8 inputs on a single monitor. Ideal for control rooms, surveillance and video teleconferencing applications, the 9767VIP8-NGI is a 1RU, rack mountable multi-image processor and controller.

Based on Evertz MVP™ architecture, this VIP™ unit combines up to 4 composite analog (NTSC/PAL) or S-Video inputs and 4 DVI/VGA computer/graphic inputs, along with a dynamically updated background DVI-I input, and offers outstanding image quality up to WUXGA (1920x1200) resolution, built-in signal monitoring (on-screen displays and SNMP), dynamic window sizing, borders, tally, text and digital clocks.

If additional video or computer inputs are required, VIP™ units (whether this 1RU version or modular 3RU VIPs) can be cascaded together, providing more windows to the ultimate display. With both factory and user-configurable (front panel and/or Maestro-VIP™ software GUI) presets, serial port and contact closures, the VIP™ series provides an integrated, cost-efficient solution to display various video formats. The 9767VIP8-NGI is VistaLINK® - capable, offering remote monitoring of faults as well as control and configuration through Simple Network Management Protocol (SNMP).

Features & Benefits

Video Inputs
- Four video inputs (NTSC/PAL) or four S-Video inputs and 4 graphic inputs
- Additional computer graphic video input (DVI-I up to WUXGA) for background display, signal analyzer tools or cascading multiple VIP™ units

Audio Inputs
- Discrete balanced analog audio (1L/R per video)
- VU/PPM level indicators

Video Output
- One DVI-I output - Drive a single DVI-D and a single RGBHV (VGA-type) display simultaneously with same content up to WUXGA (1920x1200 resolution), cable not supplied
- Minimal processing delay (~1 frame)

Graphics
- User-configurable tally indicators and configurable UMD static and/or dynamically updated text, background colors
- User-configurable borders
- LTC input drives digital clock display
- Count-up or down timer displays (GPI triggered)

Signal Monitoring
- Extensive list of user-configurable signal fault conditions with logic settings
- On-screen messages triggered by fault conditions
- Detects frozen video (patent pending) and black video
- User-configurable fault condition alert messages per video input with configurable background colors, thresholds and durations

Auxiliary Inputs
- RS-232/RS-422 communication port Interface to common UMD protocols - TSL, Image Video
- 20 assignable GPI inputs, 8 GPI outputs

Physical
- 1RU
- Genlock reference input for proper timing - 1 NTSC/PAL
- Fast power-cycle time (< 3 seconds)
- Built-in VistaLINK® support for remote monitoring and control via SNMP (using VistaLINK®PRO)
- The 9767VIP unit has a direct Ethernet connection to the network for VistaLINK®
- User must provide network cable
- Screen configurations via Maestro GUI software (included)

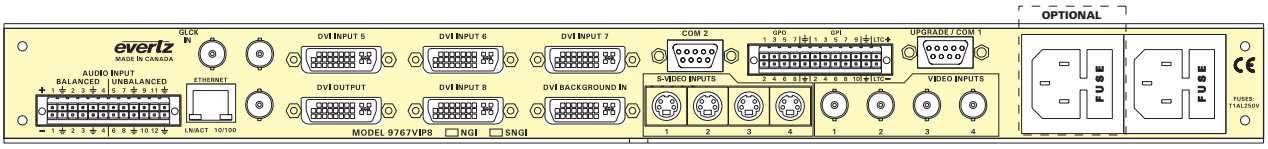

Specifications

Composite Analog Video Inputs (-N):
Standard: NTSC (SMPTE 170M), PAL (ITU-R BT.1700-1)
Number of Inputs: 4
Connector: BNC per IEC 60169-8 Amendment 2
Signal Level: 1V nominal
DC Offset: 0V ±0.1V
Input Impedance: 75Ω
Return Loss: 40dB up to 5MHz

S Video Inputs:
Number of Inputs: 4
Connector: IEC 933-S (4-pin mini DIN)
Signal Level: 1V nominal
Input Impedance: 75Ω

Background (Computer) Video Input:
Standard: Auto-detecting, VESA (DVI-I, for DVI and RGBHV inputs)
Number of Inputs: 4
Connector: DVI-I (Female)
Input Resolution: 640x480 (VGA) to 1920x1200 (WUXGA)
Signal Level: 1V nominal

Discrete Analog Audio Inputs:
Number of Inputs: 1 L/R pair per video input
Connector: Terminal Block
Input Impedance: 20kΩ min. (differential)
Sampling Frequency: 48kHz
Peak Signal and Common Model Level: 30dBu

Display Video Output:
Standard: VESA (DVI-I) up to WUXGA (1920x1200)
Number of Outputs: 1
Connector: DVI-I (with DVI to RGBHV Adapter)
Video: 1V p-p YPrPb/RGB or 0.7V p-p VGA, 60Hz refresh
Impedance: 75Ω

Genlock Input:
Type: NTSC/PAL color black
Level: 1V p-p nominal
Connector: BNC per IEC 60169-8 Amendment 2

General Purpose Interface I/O (GPI/GPO):
Number of Inputs: 20
Number of Outputs: 8
Type:
GPI: Opto-isolated, active low with internal pull-ups to +5V
GPO: Relay closure to ground
Connector: Terminal Block
Input Signal: Closure to ground

AUX Serial Port:
Number of Ports: 1 RS-232 or 1 RS-422
Connector: Terminal Block
Baud Rate: Up to 1Mbaud
Format: Configurable for various UMD interfaces

Ethernet:
Network Type: Fast Ethernet 100 Base-TX 1EEE 802.3U standard for 100Mbps baseband CSMA/CD local area network
Connector: RJ-45

Electrical:
Voltage: Auto-ranging 100-240V AC 40W
Safety: ETL Listed, complies with EU low voltage directive
EMI/RFI: Complies with FCC Part 15, Class A EU EMC Directive

Ordering Information

9767VIP8-NGI Up to four asynchronous DVI-I (DVI-D or RGBHV with adapter) inputs and four NTSC/PAL (or S-Video) inputs, one background DVI-I (DVI-D or RGBHV with adapter) input. Single DVI-I (DVI-D or RGBHV with adapter) or one serial monitoring output. Includes VistaLINK® VLPRO-C software configuration tool and Maestro-VIP™ display layout GUI.

Ordering Options
+2PS Redundant power supplies (2)

7765AVM-4 & 7765AVM-4A

Quattro™ Four SDI Video Quad Split Display with Digital Audio Monitoring

Building on the popularity of the 7760AVM series of audio, video and data monitoring cards, Evertz Quattro™ 7765AVM-4 SDI monitoring card increases the monitoring capacity by simultaneously accepting and analyzing four individual SDI/601 video signals. One multiplexed video output displays video, status and user-configurable fault condition alerts for each input in a 2x2-matrix format. Subsequently, the Quattro™ 7765AVM-4 SDI monitoring card provides a cost-effective solution not only for monitoring multiple channels in a broadcast facility, but also by offering facility managers the choice of using legacy or new output displays.

Equipped with standard audio and video (AVM) monitoring features including an on-screen, menu-driven display, user-configurable audio level bar graphs and status windows, the 7765AVM-4 Quattro™ can simultaneously display four SDI/601 video signals with embedded audio through an HD (7765AVM-4-HD), SD (7765AVM-4-SD), Composite Analog (7765AVM-4-CA) or VGA (7765AVM-4-VGA) output, supporting 4:3 and 16:9 aspect ratios. Furthermore, the 7765AVM-4A Quattro™ series monitors the signal status of either embedded audio or externally supplied AES/EBU audio (3 AES/EBU inputs per video channel supported). Upon setting parameter thresholds and enabling fault conditions, any adverse behavior of any one input stream results in a clearly recognizable, user-configurable on-screen, or GPI, fault alert message, immediately notifying operators of potential problems. The two-slot 7765AVM-4 and 7765AVM-4A cards fit conveniently into Evertz 7700FR-C frame.

The 7765AVM-4 and 7765AVM-4A cards are also VistaLINK® - capable, offering remote monitoring, control and configuration capabilities via Simple Network Management Protocol (SNMP). This product feature offers another solution to manage operations including signal monitoring and module configuration from SNMP - capable control systems (Manager or NMS) locally or remotely.

Features & Benefits

- Four SDI/601 525 line or 625 line, 270Mb/s component digital video inputs with embedded audio on 7765AVM-4 versions and embedded or external AES/EBU audio on 7765AVM-4A versions (-VGA -CA and -SD versions support either 525 or 625 line inputs, 525 line inputs for -HD version)
- One group (4 channels of audio) is demultiplexed from the SDI source and VU/PPM level and phase graphs are keyed next to the video picture
- Genlock reference input for proper timing (N/A on -VGA version)
- Decodes vertical interval time code (VITC) and "burns" the time code into the picture
- Decodes PESA format Source ID (8 characters) or VITC Source ID (5 or 9 characters) and burns the ID into the picture
- Decodes and displays Line 21 XDS packets containing network name, call letters, program name and time of day
- A comprehensive on-screen display is available to configure the various features of the module
- User-configurable on-screen display for source ID/UMD
- An extensive list of error conditions can be monitored and fault conditions can be configured from these conditions
- On-screen messages triggered by fault conditions
- Fault condition logic menu option
- Detects frozen video (patent pending) and black video
- Four user-configurable fault condition alert messages per video input with configurable background colors and opacities
- User-configurable tally indicators on source ID messages
- H/V delay viewing configuration
- Standard HD-SDI, SD-SDI, Composite Analog and VGA-type outputs
- Support for 4:3 or 16:9 video inputs and output video displays
- Twelve GPI inputs are available to modify the display characteristics (4 GPI inputs available on 7765AVM-4A versions)
- Four GPO outputs to indicate user-definable fault conditions
- External AES audio and GPI I/Os are available on a DB-25 connector
- RS-232 or RS-422 serial port (jumper configurable) for interface to common UMD protocols
- Optional Bulkhead Breakout Panel accessory that provides a convenient connection for AES/EBU audio and GPI I/O signals into the DB-25 on 7765AVM-4A modules
- VistaLINK® - capable for remote monitoring and control via SNMP (using VistaLINK® PRO) when installed in 7700FR-C frame with 7700FC VistaLINK® Frame Controller

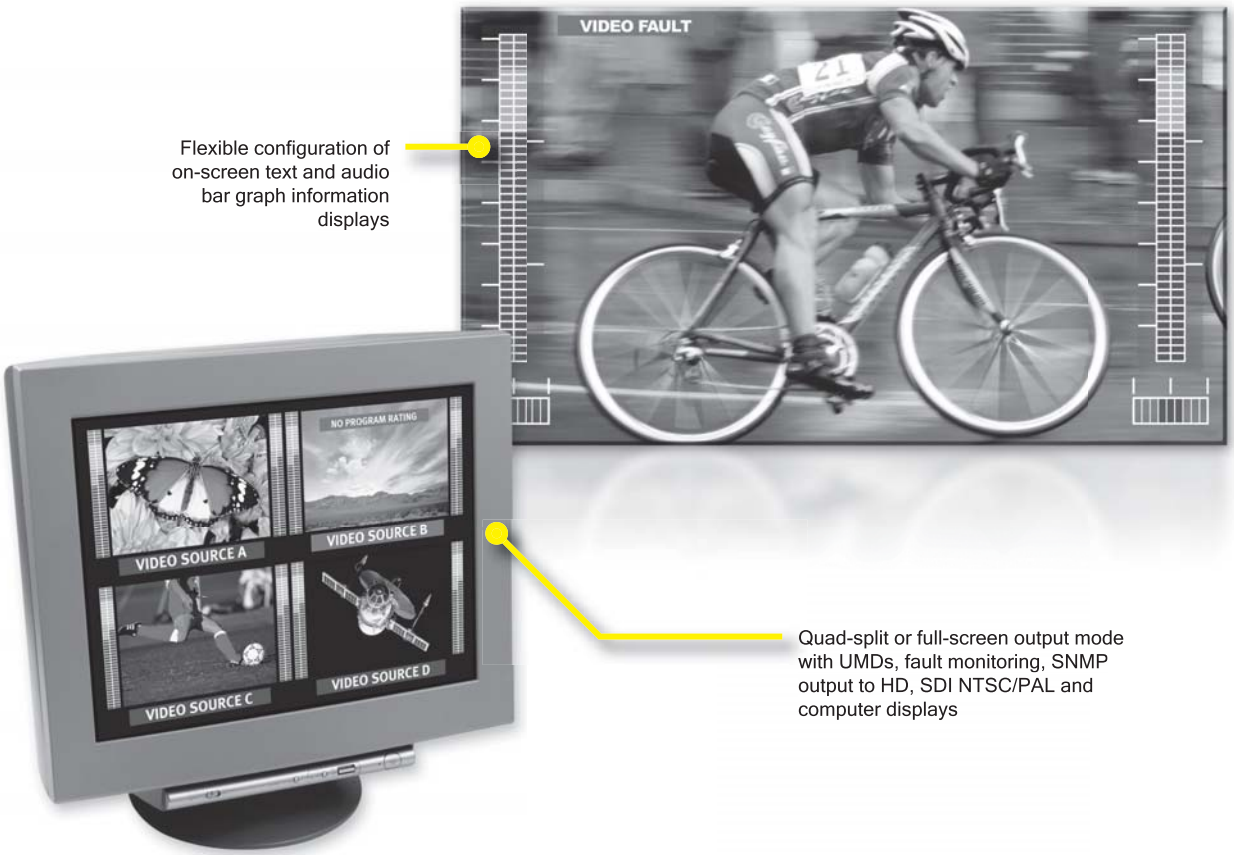

Flexible configuration of on-screen text and audio bar graph information displays

Quad-split or full-screen output mode with UMDs, fault monitoring, SNMP output to HD, SDI NTSC/PAL and computer displays

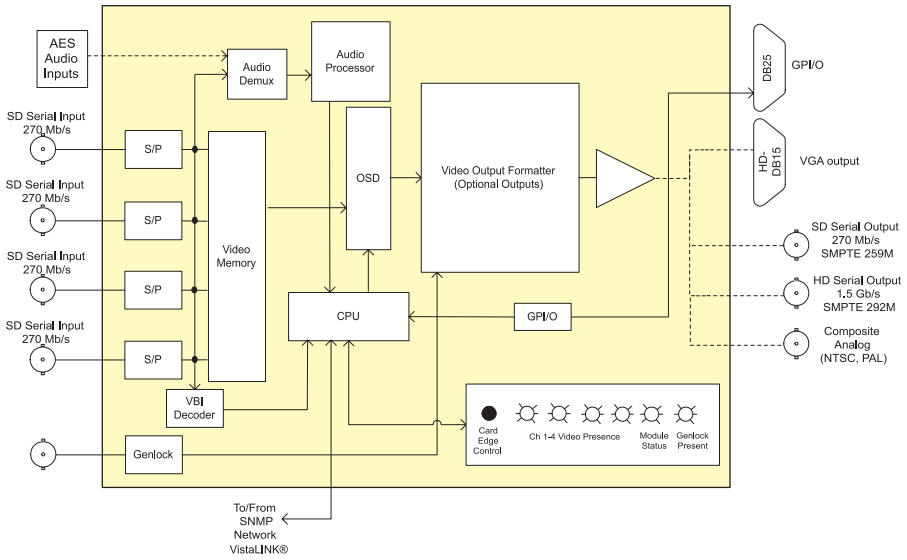

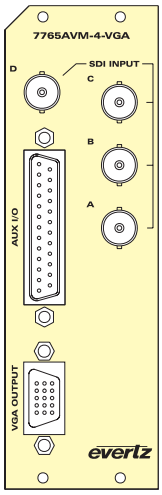

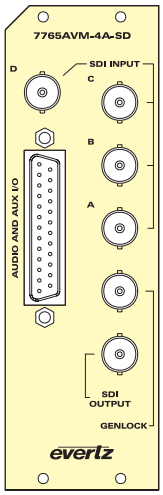

Specifications

Serial Video Input:
Standard: SMPTE 259M-C - 525 or 625 lines (525 only on -HD)
Number of Inputs: 4
Connector: BNC per IEC 60169-8 Amendment 2
Equalization: Automatic to 225m @ 270Mb/s with Belden equivalent)
Return Loss: > 15dB up to 270Mb/s
Embedded Audio: SMPTE 272M-A

Digital AES Audio Inputs (-4A):
Standard: SMPTE 276M, single ended AES
Number of Inputs: 3 per video input (total 12 inputs)
Connector: Female DB-25
Resolution: 24-bit
Sampling Rate: 48kHz
Impedance: 75Ω unbalanced

Serial Video Output (7765AVM-4-HD and 7765AVM-4A-HD):
Standard: SMPTE 292M
Number of Outputs: 1
Connector: BNC per IEC 60169-8 Amendment 2
Signal Level: 800mV nominal
DC Offset: 0V ±0.5V
Rise and Fall Time: 200ps nominal
Overshoot: < 10% of amplitude

Serial Video Output (7765AVM-4-SD and 7765AVM-4A-SD):
Standard: SMPTE 259M-C
Number of Outputs: 1
Connector: BNC per IEC 60169-8 Amendment 2
Signal Level: 800mV nominal
DC Offset: 0V ±0.5V
Rise and Fall Time: 470ps nominal
Overshoot: < 10% of amplitude

Analog Video Output (7765AVM-4-CA and 7765AVM-4A-CA):
Standard: NTSC, SMPTE 170M, PAL ITU624-4
Number of Outputs: 1
Connector: BNC per IEC 60169-8 Amendment 2
Signal Level: 1V nominal
DC Offset: 0V ±0.1V
Return Loss: >35dB up to 5MHz
Frequency Response: 0.8dB to 4MHz
Differential Phase: < 0.9° (< 0.6° typical)
Differential Gain: < 0.9% (< 0.5% typical)
SNR: > 56dB to 5MHz (shallow ramp)

Analog RGB Video Output (-VGA):
Standard: VGA
Number of Outputs: 1
Connector: Female, high density DB-15
Video: 1V p-p YPrPb/RGB or 0.7V p-p VGA, 60Hz refresh
Sync: 300mV or 4V
Impedance: 75Ω

Genlock Input (-HD, -SD, -CA only):
Type: NTSC (SMPTE 170M) color black
Level: 1V p-p nominal
Connector: BNC per IEC 60169-8 Amendment 2

Audio Bar Graph Ballistics:
Number of Graphs: 4 (1 group) per video input
Ballistics: AES/EBU, DIN, BBC, Nordic N9

General Purpose Interface I/O (GPI/GPO):
Number of Inputs: 12 (-4), 4 (-4A)
Number of Outputs: 4
Type: Opto-isolated, active low with internal pull-ups to +5V
Connector: Female DB-25
Output Signal Level: +5V nominal (high), 0V (low)
Input Signal: Closure to ground

Data Input/Output Serial Port:
Number of Ports: 1 RS-232 or 1 RS-422 (jumper configurable)
Connector: Female DB-25
Baud Rate: Up to 1Mbaud
Format: RS-232: 8 bits, no parity, 2 stop bits and no flow control

Electrical:
Voltage: +12V DC
Power: 24W
EMI/RFI: Complies with FCC Part 15, Class A EU EMC Directive

Physical:
Number of Slots: 2

Ordering Information

7765AVM-4-HD
7765AVM-4-VGA
7765AVM-4-SD
7765AVM-4-CA
The above all feature Quattro™ Four SDI Video Quad Split Display with Digital Audio Monitoring (Embedded Audio)

7765AVM-4A-HD
7765AVM-4A-VGA
7765AVM-4A-SD
7765AVM-4A-CA
The above all feature Quattro™ Four SDI Video Quad Split Display with Digital Audio Monitoring (Embedded and/or External AES/EBU)

Ordering Options Rear Plate must be specified at time of order
Eg: Model +3RU

Rear Plate Suffix
+3RU 3RU Rear Plate for use with 7700FR-C Multiframe
+1RU 1RU Rear Plate for use with 7701FR Multiframe
+SA Standalone Enclosure Rear Plate

Accessories
7765AVM-4A-BHP-7 Bulkhead Breakout Panel for 7x7765AVM-4A (includes 7x3ft cables)
7700FC VistaLINK® Frame Controller
9000NCP 1RU VistaLINK® General Purpose Network Control Panel
9000NCP2 2RU VistaLINK® General Purpose Network Control Panel

Enclosures
7700FR-C 3RU Multiframe which holds up to 15 single slot modules
7701FR 1RU Multiframe which holds up to 3 single or dual slot modules
S7701FR Standalone enclosure

7766AVM-4A & 7766AVM-S4A

Analog Quattro™ Four Analog Video & Quad Split with Analog Audio Monitoring

Evertz 7766AVM-4A and 7766AVM-S4A Analog Quattro™ audio and video monitoring cards simultaneously accept and analyze up to four composite analog or S-Video inputs and optionally display up to four signals with alarm, status and audio level monitoring in a 2x2 matrix format. High resolution serial SD, analog RGB and composite analog outputs are available.

Equipped with standard features including an on-screen, menu-driven display, user -configurable audio level and phase bar graphs, and status windows, the 7766AVM-4A & 7766AVM-S4A can simultaneously display four video signals and external analog audio with on-screen audio, video and data status information through SD, analog RGB and composite analog outputs. Upon setting parameter thresholds and enabling fault conditions, any adverse behavior of any one input stream results in a clearly recognizable, user-configurable on-screen, or GPI fault alert message, immediately notifying operators of potential problems. The two-slot 7766AVM-4A & 7766AVM-S4A cards fit conveniently into Evertz 7700FR-C frame. Up to 28 signals can be monitored from the single 3RU frame.

The 7766AVM-4A & 7766AVM-S4A cards are VistaLINK® - capable offering remote monitoring, control and configuration capabilities via Simple Network Management Protocol (SNMP). This offers the flexibility to manage operations including signal monitoring and card configuration from SNMP - capable control systems (Manager or NMS) locally or remotely.

Features & Benefits

- Four composite analog (NTSC/PAL auto-detecting) inputs (BNC-type)
- Optional four S-Video inputs
- One analog RGB or Composite Analog output
- 4 balanced audio inputs per video input channel is analyzed and VU/PPM level indicators are keyed as bar graphs beside the video output (16 analog audio channels per card)
- H/V delay viewing configuration
- Quadrant view or expanded display modes
- Detects frozen and black video
- Decodes vertical interval time code (VITC) and "burns" the time code into the picture
- Decodes VITC Source ID (5 or 9 characters), PESA format Source ID (8 characters) or user-configurable default message (when not decoded) and burns the ID into the picture
- A comprehensive on-screen display is available to configure the various features of the module
- Flexible configuration of the text and audio bar graph information displays
- An extensive list of error conditions can be monitored and fault conditions can be configured from these conditions
- Four user-configurable fault condition alert messages with independent fault threshold and duration settings
- On-screen messages can be triggered by the configured fault conditions
- User-configurable tally indicators and configurable SID/UMD text and background colors
- RS-232/RS-422 serial port (jumper configurable) for interface to common UMD protocols
- Four GPI inputs (unassigned)
- Four GPO outputs (dedicated 1 per video quadrant)
- Audio and GPI/Os are available through SCSI connector
- Fault condition logic menu option
- VistaLINK® - capable for remote monitoring and control via SNMP (using VistaLINK® PRO) when installed in 7700FR-C frame with 7700FC VistaLINK® Frame Controller

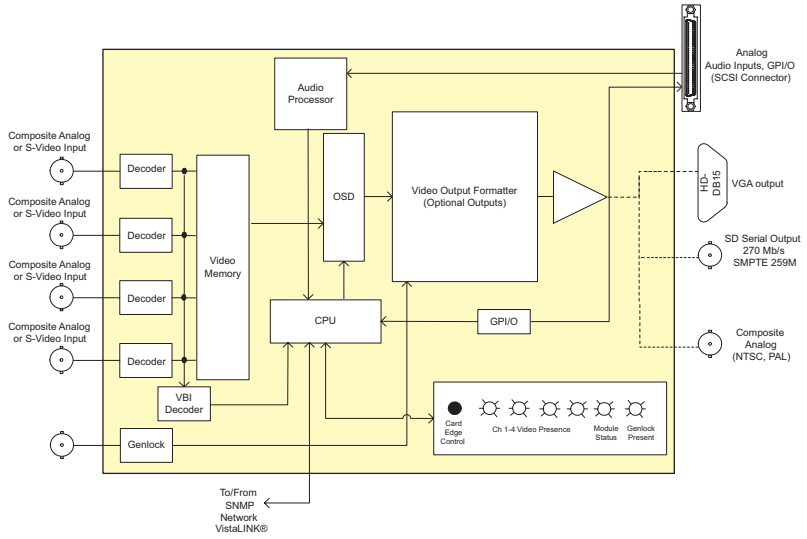

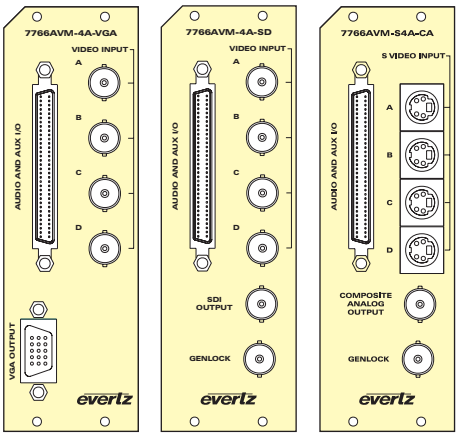

Specifications

Analog Video Input:
Standard: NTSC (SMPTE 170M) PAL (ITU624-4)
Number of Inputs: 4
Connector: BNC per IEC 60169-8 Amendment 2
Signal Level: 1V nominal
DC Offset: 0V ±1V
Input Impedance: 75Ω
Return Loss: > 40dB up to 5MHz

S-Video Input (7766AVM-S4A-x):
Number of Inputs: 4
Connector: 4-pin mini DIN
Signal Level: Y: 1.0V p-p, C: 0.286V p-p
Input Impedance: 75Ω, sync negative, 75Ω terminated

Analog Audio Input:
Number of Inputs: 16 (2 balanced pair per video input)
Connector: 68-pin SCSI
Type: Balanced analog audio
Input Impedance: 20kΩ minimum (differential)
Sampling Frequency: 48kHz
Peak Signal and Common Mode Level: 30dBu

Serial Video Output (7766AVM-4A-SD & 7766AVM-S4A-SD):
Standard: SMPTE 259M-C
Number of Outputs: 1
Connector: BNC per IEC 60169-8 Amendment 2
Signal Level: 800mV nominal
DC Offset: 0V ±0.5V
Rise and Fall Time: 470ps nominal
Overshoot: < 10% of amplitude

Analog Video Output (7766AVM-4A-CA & 7766AVM-S4A-CA):
Standard: NTSC (SMPTE 170M), PAL (ITU624-4)
Number of Outputs: 1
Connector: BNC per IEC 60169-8 Amendment 2
Signal Level: 1V nominal
DC Offset: 0V ±0.1V
Return Loss: > 35dB up to 5MHz
Frequency Response: 0.8dB to 4MHz
Differential Phase: < 0.9° (< 0.6° typical)
Differential Gain: < 0.9% (< 0.5% typical)
SNR: > 56dB to 5MHz (shallow ramp)

Analog Video Output (7766AVM-4A-VGA & 7766AVM-S4A-VGA):
Standard: VESA
Number of Outputs: 1
Connector: Female, high density DB-15
Video: 1V p-p YPrPb/RGB or 0.7V p-p VGA, 60Hz refresh
Impedance: 75Ω
Sync: 300mV or 4V

Genlock Input:
Type: NTSC (SMPTE 170M) color black
Level: 1V p-p nominal
Connector: BNC per IEC 60169-8 Amendment 2

Audio Bar Graphs (per video output):
Number of Graphs: 4 (1 group) per video input channel, 2 phase meters
Ballistics: DIN, BBC and Nordic N9

General Purpose In/Out (GPI/GPO):
Number of Inputs: 4 (configurable)
Number of Outputs: 4 (dedicated)
Connector: 68-pin SCSI
Type: Opto-isolated, active low with internal pull-ups to +5V
Input Signal: Closure to ground
Signal Level: +5V nominal

Data Input/Output Serial Port:
Standard: 1 RS-232 or 1 RS-422 (jumper selectable)
Connector: 68-pin SCSI
Baud Rate: Up to 1 Mbaud
Format: RS-232: 8 bits, no parity, 2 stop bits and no flow control

Electrical:
Voltage: +12V DC
Power: 24W
EM/RFI: Complies with FCC Part 15 Class A EU EMC Directive

Physical:
Number of slots: 2

Ordering Information

7766AVM-4A-VGA	Analog Quattro™ Four Composite Analog Video (BNC) and Analog Audio Monitoring with analog RGB output
7766AVM-4A-CA	Analog Quattro™ Four Composite Analog Video (BNC) and Analog Audio Monitoring with Composite Analog output
7766AVM-4A-SD	Analog Quattro™ Four Composite Analog Video (BNC) and Analog Audio Monitoring with Serial Digital output
7766AVM-S4A-VGA	Analog Quattro™ Four S-Video and Analog Audio Monitoring with analog RGB output
7766AVM-S4A-CA	Analog Quattro™ Four S-Video and Analog Audio Monitoring with Composite Analog output
7766AVM-S4A-SD	Analog Quattro™ Four S-Video and Analog Audio Monitoring with Serial Digital output

Ordering Options Rear Plate must be specified at time of order
Eg: Model +3RU

Rear Plate Suffix

+3RU	3RU Rear Plate for use with 7700FR-C Multiframe
+1RU	1RU Rear Plate for use with 7701FR Multiframe
+SA	Standalone Enclosure Rear Plate

Accessories

7766AVM-4A-BHP-4	Bulkhead breakout panel, linking audio, GPI/O and comm port to up to four 7766AVM-4A/-S4A
7766AVM-4A-BHP-1	Bulkhead breakout panel, linking audio, GPI/O and comm port to one 7766AVM-4A/-S4A (included with every 7766AVM-4A and 7766AVM-S4A product)
WSCS133PEX4	Breakout cable (3ft) for 7766AVM-4A-BHP (will work for both "-4" or "-1" BHP models
7700FC	VistaLINK® Frame Controller
9000NCP	1RU VistaLINK® General Purpose Network Control Panel
9000NCP2	2RU VistaLINK® General Purpose Network Control Panel

Enclosures

7700FR-C	3RU Multiframe which holds up to 15 single slot modules
7701FR	1RU Multiframe which holds up to 3 single or dual slot modules
S7701FR	Standalone enclosure

7760AVM2 & 7760AVM2-HD

HD/SD Video & Audio Monitoring / Conversion

The 7760AVM2 series of video and audio monitoring cards perform a number of quality control and monitoring functions associated with a modern high definition and standard definition serial digital television facility. They perform audio and ancillary data (for HD) or vertical blanking interval (VBI) data (for SDI) demultiplexing from the incoming digital video, analyze the data and display key information about the data on the output video. The outputs are either analog and/or digital video with analog or digital audio.

The 7760AVM2 series modules are available in SD-only versions (7760AVM2-A and 7760AVM2-B) and a combination HD/SD version (7760AVM2-HD).

The 7760AVM2 series modules can be ordered with a 7760AVM-BHP Bulkhead Breakout Panel. This panel is an accessory that provides a convenient way of connecting the audio and GPIO signals into the high-density DB-15 connectors on the rear of the modules. This panel is available for five or ten 7760AVM2s and includes 3ft cables to connect to the 7760AVM2 modules.

The 7760AVM2 series modules occupy one card slot in the 3RU frame (7700FR-C), which will hold up to 15 modules or one slot in the 1RU frame (7701FR), which will hold up to three modules. The 7760AVM2 series modules may also be used in a standalone unit (S7701FR).

VistaLINK® enables control and configuration capabilities via Simple Network Management Protocol (SNMP). This offers the flexibility to manage the module status monitoring and configuration from SNMP - enabled control systems such as Evertz VistaLINK® PRO locally or remotely.

Features & Benefits

- One group (4 channels of audio) is demultiplexed from the incoming digital video and VU/PPM level Indicators are keyed as bar graphs in over the picture
- 4 analog audio outputs available for content monitoring
- Analog audio output levels are adjustable
- Analog audio outputs can be set so both are mono mix of the selected channel pair
- Decodes Line 21 XDS packets from SD signals and displays network name, call letters, program name and time of day
- Decodes Widescreen Signaling (WSS), Video Indexing, Active Format Description (AFD), subtitles, and teletext for monitoring
- Displays program rating (V-Chip)
- Decodes CEA-608 closed captions from SD signals and displays on screen
- Decodes vertical interval time code (VITC) from SD signals and "burns" the time code into the picture
- A comprehensive on-screen display is available to configure the various features of the module
- Flexible configuration of the text and audio bar graph information displays
- An extensive list of error conditions can be monitored and fault conditions can be configured from these conditions
- On-screen messages can be triggered by the configured fault conditions
- Two GPI inputs are available to modify the display characteristics
- GPO output to indicate user-definable fault conditions
- Audio and GPI/Os are available on a high density DB15 connector
- 7760AVM-BHP bulkhead panel is available to facilitate wiring to the high density DB15 connector (up to 10 AVM2 modules can be wired using each bulkhead panel)
- RS-232 Data logging port to log fault conditions
- VistaLINK® - capable offering remote control and configuration capabilities via SNMP using VistaLINK® Pro, 9000NCP or 9000NCP2 Network Control Panel
- VistaLINK® is available when modules are used with the 3RU 7700FR-C frame and a 7700FC VistaLINK® Frame Controller

Features (7760AVM2-A and 7760AVM2-B versions only)

- One 270Mb/s SDI 525i/59.94 or 625i/50 video input
- One re-clocked SDI video output
- One SDI video output with superimposed monitoring information (-B version only)
- Composite analog output video with superimposed monitoring information (-A version only)
- Decodes PESA format Source ID (8 characters) or Evertz format VITC Source ID (5 or 9 characters) from SDI signals and burns the ID into the picture

Features (7760AVM2-HD version only)

- One auto sensing video input - supports 1080i/60, 1080i/59.94, 1080i/50, 720p/60, 720p/59.94, 720p/50, 525i/59.94 or 625i/50
- One re-clocked HD or SD video output (same as input)
- One HD or SD (same as input) video output with superimposed monitoring information
- Decodes RP188 Ancillary time code (ATC) from HD signals or vertical interval time code (VITC) from SD signals and "burns" the time code into the picture
- Optionally decodes PESA format Source ID (8 characters) or Evertz format VITC Source ID from SDI signals, or Evertz format ATC Source ID from HD signals and burns the ID into the picture (with +SID option)
- Decodes CEA-708 closed captions from HD signals and displays on screen

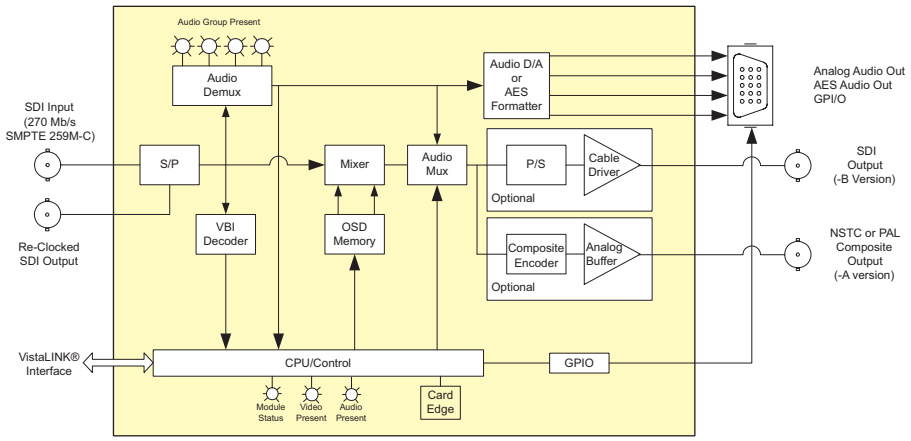

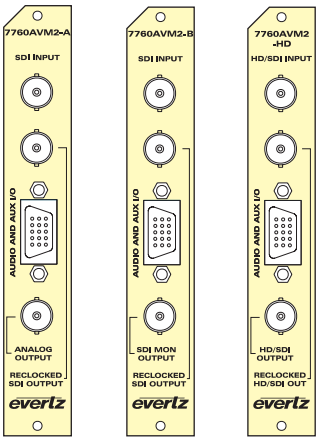

Specifications

Serial Video Digital Input:
Standards: Auto detect or menu selectable SMPTE 292M (1.5Gb/s): 1080i/60, 1080i/59.94, 1080i/50, 720p/60, 720p/59.94 and 720p/50 - 7760AVM2-HD only
SMPTE 259M-C (270Mb/s): 525i/59.94 or 625i/50
Number of Inputs: 1
Connector: BNC per IEC 60169-8 Amendment 2
Input Equalization: Automatic to 200m @ 270Mb/s with Belden 8281 or equivalent cable
Automatic to 115m @ 1.5Gb/s with Belden 1694A or equivalent cable
Return Loss:
SD Standards: > 15 dB up to 270Mb/s
HD Standards: > 15 dB up to 1.5Gb/s

Serial Video Digital Output:
Standard: Same as input
Number of Outputs: 1 Reclocked (all models)
1 Monitored (7760AVM2-B and 7760AVM2-HD)
Connector: BNC per IEC 60169-8 Amendment 2
Signal Level: 800mV nominal
DC Offset: 0V ±0.5V
Rise and Fall Time:
SD Standards: 470ps nominal
HD Standards: 200ps nominal
Overshoot: < 10% of amplitude

Analog Video Output (7760AVM2-A only):
Standard: NSTC, SMPTE 170M; PAL, ITU-R BT.1700
Number of Outputs: 1
Connector: BNC per IEC 60169-8 Amendment 2
Signal Level: 1V nominal
DC Offset: 0V ±0.1V
Return Loss: > 35dB up to 5MHz
Frequency Response: 0.8dB to 4MHz
Differential Phase: < 0.9° (< 0.6° typical)
Differential Gain: < 0.9% (< 0.5% typical)
SNR: > 56dB to 5MHz (shallow ramp)

Analog Audio Outputs:
Number of Outputs: 4
Type: Balanced Analog Audio
Connectors: Female High Density DB-15
Output Impedance: 33Ω
Sampling Frequency: 48kHz
Signal Level: 0dB FS ⇨8 to 24dBu (user settable)
NOTE: High impedance loads only (10kW)
Not good for low impedance loads (i.e. 600W)
Frequency Response: 50Hz to 20kHz ±0.20dB
SNR: > 85dB (50Hz to 20kHz)
THD+N: 65dB @ 1kHz, 0dB FS, typical

AES Audio Outputs:
Number of Outputs: 2
Standard: SMPTE 276M compatible, single ended synchronous or asynchronous AES
Connectors: High-density female DB-15
Resolution: 24 bits
Sampling Rate: 48kHz
Impedance: 75Ω unbalanced

Audio Bar Graphs:
Number of Graphs: 4 (1 group)
Ballistics: AES/EBU, DIN, BBC and Nordic N9

General Purpose Interface I/O (GPI/GPO):
Number of Inputs: 2 (behavior is assigned via on-screen menu items)
Number of Outputs: 1 (behavior is programmable via on-screen menu items)
Type: Opto-isolated, active low with internal pull-ups to +5V
Connector: Female High Density DB-15
Signal Level: +5V nominal

Data Logging Serial Port:
Standard: RS-232
Connector: Female High Density DB-15
Baud Rate: 57,600
Format: 8-bits, no parity, 2 stop bits and no flow control

Physical:
Number of slots: 1

Electrical:
Voltage: +12V DC
Power: 12W
EMI/RFI: Complies with FCC Part 15, Class A
EU EMC Directive

Ordering Information

7760AVM2-A to B	SDI Video & Audio Monitor/Conversion with On-Screen Display (Single Slot) with Teletext subtitle decoder
7760AVM2-HD	HD Video & Audio Monitoring

Ordering Options Rear Plate must be specified at time of order
Eg: Model +3RU

+SID Source ID Decoder option for 7760AVM2-HD

Rear Plate Suffix
+3RU 3RU Rear Plate for use with 7700FR-C Multiframe
+1RU 1RU Rear Plate for use with 7701FR Multiframe
+SA Standalone Enclosure Rear Plate

Accessories
7760AVM-BHP-10 Bulkhead Breakout panel for 10 AVMs includes 10 WPAVMIO-1-0-3F - 3ft cables
7760AVM-BHP-5 Bulkhead Breakout panel for 5 AVMs includes 5 WPAVMIO-1-0-3F - 3ft cables
7700FC VistaLINK® Frame Controller
9000NCP 1RU VistaLINK® General Purpose Network Control Panel
9000NCP2 2RU VistaLINK® General Purpose Network Control Panel

Enclosures
7700FR-C 3RU Multiframe which holds up to 15 single slot modules
7701FR 1RU Multiframe which holds up to 3 single or dual slot modules
S7701FR Standalone enclosure

7760AVM-LITE

SDI Video & Audio Monitoring / Conversion (Without On-screen Display)

The 7760AVM-Lite Audio/Video Monitor provides a convenient and low cost solution for composite analog monitoring of a 270Mb/s serial digital video signal, and provides analog conversion of 1 group of embedded or external AES audio*.

The digital component video is converted to analog composite (NTSC/PAL-B). Closed captioning can be keyed onto the output composite video.

SMPTE 272M allows for up to four groups of AES audio (4 channels per group) to be embedded within a serial digital signal. The 7760AVM-Lite can de-multiplex one group and convert all 4 channels to low impedance balanced analog audio through 24-bit DACs. In addition, the same audio is available simultaneously as 75Ω unbalanced digital AES on the 7760AVM-Lite A.

**The 7760AVM-Lite B allows for monitoring of external or embedded AES audio but does not supply de-multiplexed AES audio out.*

Features & Benefits

- 1 Reclocked SDI output
- Composite analog (NTSC/PAL-B) output
- 4 Balanced analog audio outputs
- 2 AES digital audio outputs or inputs
- 1 General purpose output to indicate the loss of video and/or audio
- Built-in closed caption decoder with on/off control via dip switch and GPI
- Audio group selection via card edge DIP switches
- Selectable analog audio output levels
- Audio channel swapping selection via card edge DIP switches
- Selectable NTSC pedestal on/off

Card Edge LEDs
- Module Status
- Local Fault
- Video Signal Presence
- Audio groups present in input video
- Selected audio group presence

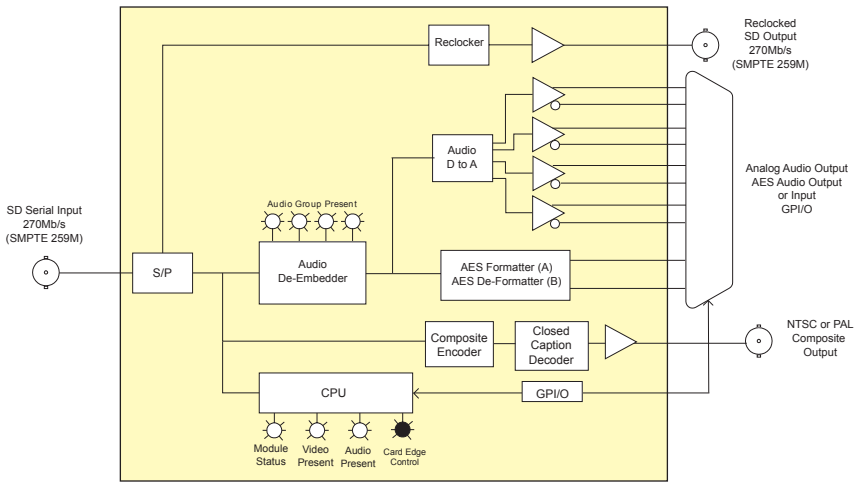

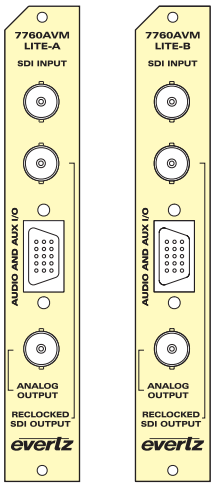

Specifications

Serial Video Input:

Standard:	SMPTE 259M-C 525 or 625 line component
Connector:	BNC per IEC 60169-8 Amendment 2
Equalization:	Automatic 200m @ 270 Mb/s with Belden 8281 (or equivalent)
Return Loss:	> 15dB up to 270Mb/s

Serial Video Output:

Standard:	Same as input
Connector:	BNC per IEC 60169-8 Amendment 2
Signal Level:	800mV nominal
DC Offset:	0V ±0.5V
Rise and Fall Time:	470ps nominal
Overshoot:	< 10% of amplitude
Return Loss:	> 15dB up to 270Mb/s
Wide Band Jitter:	< 0.2 UI

AES Audio Inputs:

Number of Inputs:	2 on version B
Standard:	SMPTE 276M, single ended AES
Connectors:	Female High Density DB-15
Resolution:	24-bit
Sampling Rate:	48kHz
Impedance:	75Ω unbalanced

AES Audio Outputs:

Number of Outputs:	2 on version A
Standard:	SMPTE 276M, single ended AES
Connectors:	Female High Density DB-15
Resolution:	24-bit
Sampling Rate:	48kHz
Impedance:	75Ω unbalanced

Analog Video Output:

Type:	NTSC, (SMPTE 170M) or PAL-B, (ITU 624-4)
Connector:	BNC per IEC 60169-8 Amendment 2
Signal Level:	1V nominal
DC Offset:	0V ±0.1V
Return Loss:	> 35dB up to 5MHz
Frequency Resp:	0.8dB to 4MHz
Differential Phase:	< 0.9° (typical < 0.5%)
Differential Gain:	< 0.9% (typical < 0.5%)
SNR:	> 56dB to 5MHz (shallow ramp)
Processing Delay:	1.9ms

Analog Audio Outputs:

Number of Outputs:	4
Type:	Balanced analog audio
Connector:	Female High Density DB-15
Output Impedance:	33Ω
Sampling Frequency:	48kHz
Signal Level:	0dB FS => 20dBu, 22dBu, 24dBu NOTE: High impedance loads only (> 10kΩ) Not good for low impedance loads (i.e. 600Ω)
Frequency Resp.:	50Hz to 20kHz ±0.20dB
SNR:	> 85dB (50Hz to 20kHz)
THD+N:	65dB @ 1kHz, 0dBFS, typical
Resolution:	24-bit

Electrical:

Voltage:	+12V DC
Power:	6W
EMI/RFI:	Complies with FCC Part 15 Class A EU EMC Directive

Physical:

Number of Slots:	1

Ordering Information

7760AVM-Lite	X SDI Video & Audio Monitoring/Conversion
X = A or B	(A - AES Output), (B - AES Input)

Ordering Options Rear Plate must be specified at time of order
Eg: Model +3RU

Rear Plate Suffix

+3RU	3RU Rear Plate for use with 7700FR-C Multiframe
+1RU	1RU Rear Plate for use with 7701FR Multiframe
+SA	Standalone Enclosure Rear Plate\

Enclosures

7700FR-C	3RU Multiframe which holds up to 15 single slot modules
7701FR	1RU Multiframe which holds up to 3 single or dual slot modules
S7701FR	Standalone enclosure

The 7760VMS-HD is a Video Monitoring tool for two 1.5Gb/s HDTV serial digital video signals. The 7760VMS-HD has a HDTV split-screen output from two input signals and also provides a monitoring downconverted split screen. The 7760VMS-HD accepts all the popular international SMPTE 292M video formats. This module is useful in mobile broadcast vehicles and broadcast platnts to compare primary and secondary video feeds.

This 7700 series module provides 3 reclocked primary outputs and 1 reclocked secondary output. The 7760VMS-HD occupies two card slots in the 3RU frame which will hold up to 7 modules, or 1 slot in the 1RU frame which will hold up to three modules.

Features & Benefits

- Two Serial digital 1.5Gb/s HD inputs per SMPTE 292M
- 3 Reclocked DA outputs from input 1 and 1 Reclocked DA output from input 2
- Mixer takes left half of input 1 and right half of input 2 and keys them together to form the HD Program Output
- Monitoring downconverter for SDI monitoring of split signal
- Occupies two card slots in the 3RU frame, which will hold up to 7 modules or the 1RU frame, which will hold up to three modules
- Card edge LEDs indicate module health, video present
- Tally output on Frame Status bus upon loss of input signals
- VistaLINK® - capable offering remote control and configuration capabilities via SNMP (using VistaLINK® PRO, 9000NCP or 9000NCP2 Network Control Panel) is available when modules are used with the 3RU 7700FR-C frame and a 7700FC VistaLINK® Frame Controller module in slot 1 of the frame

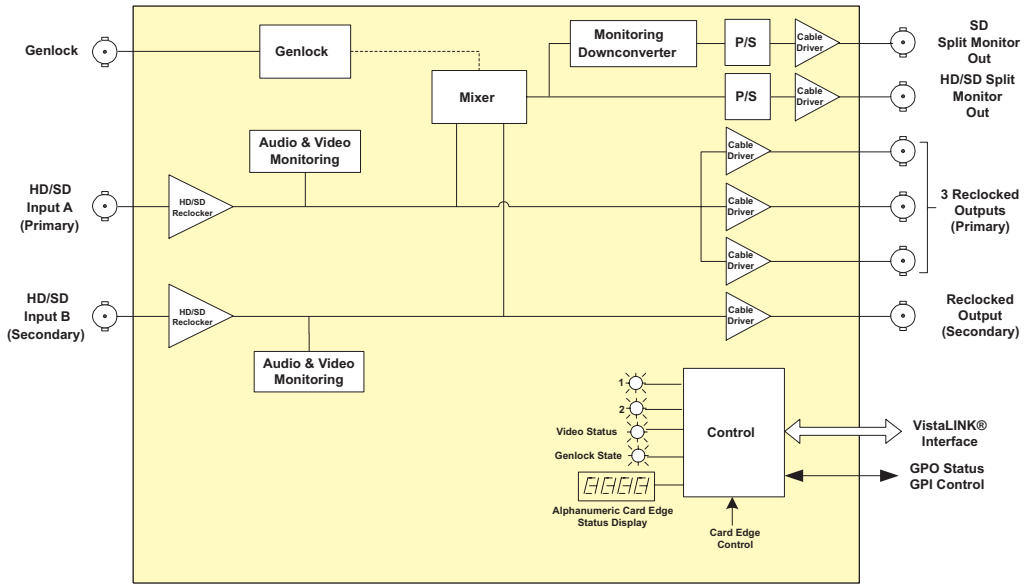

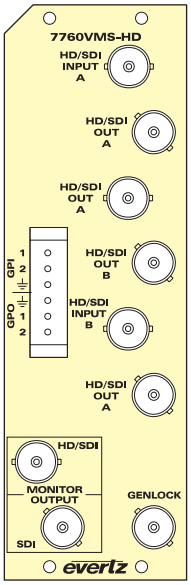

Specifications

Serial Video Inputs:

Standard:	1.485Gb/s SMPTE 292M - auto-detects standard SMPTE 260M, SMPTE 274M, SMPTE 296M, SMPTE 349M
Connector:	2 BNC per IEC 60169-8 Amendment 2
Input Equalization:	Automatic to 100m @ 1.5Gb/s with Belden 1694A or equivalent cable
Return Loss:	> 20dB up to 270MHz > 12dB up to 1.5GHz

Reclocked Serial Video Outputs:

Standard:	Same as input
Number of Outputs:	3 outputs from input A, 1 output from input B, reclocked
Connector:	BNC per IEC 60169-8 Amendment 2
Signal Level:	800mV nominal
DC Offset:	0V ±0.5V
Rise and Fall Time:	200ps nominal for HD
Overshoot:	< 10% of amplitude
Return Loss:	> 20dB up to 270MHz, > 15dB at 1.5Gb/s
Jitter:	< 0.16 UI

Downconverted Serial Video Output:

Standard:	SMPTE 259M-C (270Mb/s)
Number of Outputs:	1
Connector:	BNC per IEC 60169-8 Amendment 2
Signal Level:	800mV nominal
DC Offset:	0V ±0.5V
Rise and Fall Time:	750ps nominal
Overshoot:	< 10% of amplitude
Return Loss:	> 15dB at 270Mb/s
Jitter:	< 0.2 UI

Genlock Input:

Type:	NTSC or PAL Color Black 1V p-p
Connector:	BNC per IEC 60169-8 Amendment 2
Termination:	High impedance or internal 75Ω termination (jumper selectable)

GPIO Control Port:

Type:	Opto-isolated, active low with internal pull-ups to +5 or +12V (jumper settable)
Connector:	6 pins removable terminal block
Signal Level:	Closure to ground

Electrical:

Voltage:	+12V DC
Power:	14W
EMI/RFI:	Complies with FCC regulations for Class A devices Complies with EU EMC directive

Physical:

7700 frame mounting:
Number of slots: 2
7701 frame mounting:
Number of slots: 1

Ordering Information

7760VMS-HD	HD Video Monitoring Splitter
Ordering Options	Rear Plate must be specified at time of order Eg: Model +3RU

Rear Plate Suffix

+3RU	3RU Rear Plate for use with 7700FR-C Multiframe
+1RU	1RU Rear Plate for use with 7701FR Multiframe

Accessories

7700FC	VistaLINK® Frame Controller
9000NCP	1RU VistaLINK® General Purpose Network Control Panel
9000NCP2	2RU VistaLINK® General Purpose Network Control Panel

Enclosures

7700FR-C	3RU Multiframe which holds up to 15 single slot modules
7701FR	1RU Multiframe which holds up to 3 single or dual slot modules

7761AVM2-DC, 7761AVM2-SDC, 7761AVM2-SDC-S

Dual Channel Video & Analog Audio Monitoring

The 7761AVM2-DC Dual Channel Composite Video & Analog Audio and 7761AVM2-SDC Dual S-Video & Analog Audio monitoring cards perform a number of video, audio and vertical blanking interval (VBI) data analysis, quality control and monitoring functions similar to that of the 7760AVM line of audio/video monitoring cards. Incoming composite analog video or S-video is analyzed and key information about the signal is displayed on the output video. Both 7761AVM2-DC and 7761AVM2-SDC cards have two independent, composite analog video outputs.

The 7761AVM2-DC and 7761AVM2-SDC are configurable both locally, through a card-edge push-button toggle with an on-screen display menu, and remotely through the SNMP communication channel - known as VistaLINK®.

VistaLINK® offers remote monitoring, control and configuration capabilities via Simple Network Management Protocol (SNMP), giving the flexibility to manage operations, including signal monitoring and module configuration, from SNMP - capable control systems (Manager or NMS).

Features & Benefits

- Two independent, composite analog (NTSC/PAL) video inputs (7761AVM2-DC)
- Two independent, S-Video inputs (7761AVM2-SDC) for direct connection to satellite IRDs for improved picture display quality
- Dual S-video output version (coming soon)
- One group (4 balanced audio inputs) per video input channel is analyzed and VU/PPM level indicators are keyed as bar graphs in over the video output
- Decodes vertical interval time code (VITC), VBI Source ID and Closed Captioning into the picture
- Provides peak video (Average Picture Level) and black level status and fault monitoring
- A comprehensive on-screen display (OSD) is available to configure the various features of the module
- Flexible configuration of the text and audio bar graph information displays
- An extensive list of error conditions can be monitored and fault conditions can be configured from these conditions
- On-screen messages can be triggered by the configured fault conditions
- Two independent composite analog (NTSC/PAL) video outputs
- Video output "black-out" option while maintaining audio, video and data parameter monitoring
- Two GPI inputs per video input are available to modify the display characteristics
- GPO output per video output is available to indicate user-definable fault conditions
- Audio and GPI/Os are available on a female DB-25 connector
- RS-232 data logging port to log fault conditions
- 7761AVM-DC-BHP-15 Bulkhead Breakout Panel is available to facilitate wiring to the DB-25 connector (Up to 15 7761AVM2-DC or 7761AVM2-SDC cards can be wired per 3RU bulkhead panel)
- VistaLINK® capable for remote monitoring and control via SNMP (using VistaLINK® PRO) when installed in 7700FR-C frame with 7700FC VistaLINK® Frame Controller

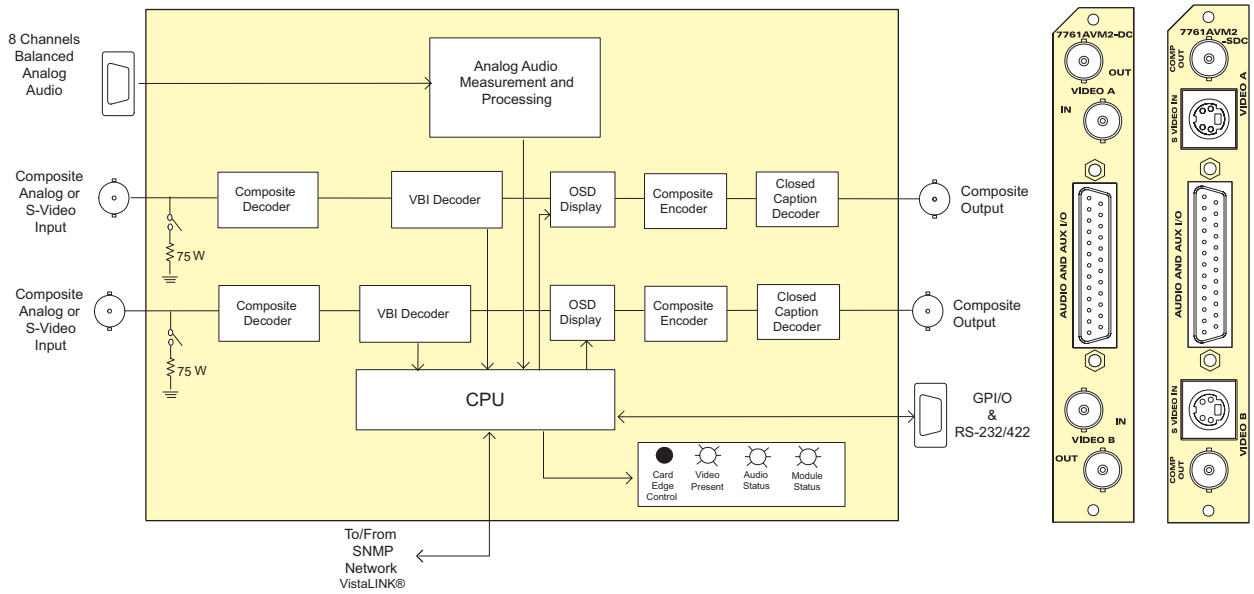

Specifications

Analog Video Input:
Standard: NTSC (SMPTE 170M), PAL (ITU-R BT. 1700)
Number of Inputs: 2
Connector: BNC per IEC 60169-8 Amendment 2
Signal Level: 1V nominal
DC Offset: 0V ±1V
Input Impedance: 75Ω
Return Loss: > 40dB up to 5MHz

S-Video Input (7761AVM2-SDC):
Number of Inputs: 2
Connector: IEC 933-5 (4-pin mini-DIN)
Signal Level: Y: 1.0V p-p, C: 0.286V p-p
Input Impedance: 75Ω

Analog Audio Input:
Number of Inputs: 8 (4 balanced inputs per video input channel)
Connector: Female DB-25
Input Impedance: 20kΩ minimum (differential)
Sampling Frequency: 48kHz
Peak Signal and Common Mode Level: 30dBu

Analog Video Output:
Standard: NTSC (SMPTE 170M) PAL (ITU-R BT. 1700)
Number of Outputs: 2
Connector: BNC per IEC 60169-8 Amendment 2
Signal Level: 1V nominal
DC Offset: 0V ±0.1V
Return Loss: > 35dB up to 5MHz
Frequency Response: 0.8dB to 4MHz
Differential Phase: < 0.9°(< 0.6° typical)
Differential Gain: < 0.9% (< 0.5% typical)
SNR: > 56dB to 5MHz (shallow ramp)

Audio Bar Graphs:
Number of Graphs: 4 (1 group) per video input channel, 2 phase meters
Ballistics: DIN, BBC and Nordic N9

General Purpose In/Out:
Number of Inputs: 1 or 2 (configurable) per video input
Number of Outputs: 1 or 2 (configurable) per video output
Type: Opto-isolated, active low with internal pull-ups to +5V
Connector: Female DB-25
Signal Level: +5V nominal (high), 0V (low)

Data Logging Serial Port:
Standard: RS-232
Connector: Female DB-25
Baud Rate: 57,600
Format: 8 bits, no parity, 2 stop bits and no flow control

Electrical:
Voltage: +12V DC
Power: 13W
EMI/RFI: Complies with FCC Part 15 class A EU EMC Directive

Physical:
Number of slots: 1

Ordering Information

7761AVM2-DC	Dual Channel Video & Analog Audio Monitoring
7761AVM2-SDC	Dual S-Video & Analog Audio Monitoring
7761AVM2-SDC-S	Dual S-Video & Analog Audio Monitoring with Dual S-Video Outputs

Ordering Options Rear Plate must be specified at time of order
Eg: Model +3RU

Rear Plate Suffix

+3RU	3RU Rear Plate for use with 7700FR-C Multiframe
+1RU	1RU Rear Plate for use with 7701FR Multiframe
+SA	Standalone Enclosure Rear Plate

Accessories

7761AVM-BHP-15	Bulkhead Breakout Panel for 15x7761AVM-DC cards (includes 15x3ft cables)
WA7761AVMBHP3F	Breakout cable (3ft) for 7761AVM-DC models
7700FC	VistaLINK® Frame Controller
9000NCP	1RU VistaLINK® General Purpose Network Control Panel
9000NCP2	2RU VistaLINK® General Purpose Network Control Panel

Enclosures

7700FR-C	3RU Multiframe which holds up to 15 single slot modules
7701FR	1RU Multiframe which holds up to 3 single or dual slot modules
S7701FR	Standalone enclosure

Bulkhead Breakout Panels (BHP) provide a convenient way of connecting audio and auxiliary input and output signals to the VIP™ module. BHPs may be outfitted with BNCs and/or terminal strips, extending AES, GPI/O, Tx/Rx, Analog Audio and GND connections as described below.

BHPs occupy 1/2RU, 1RU or 2RU of rack space and are designed for mounting at the rear of the rack panel. BHPs are included with specific line item order options as defined below:

7760AVM-BHP-5 & 7760AVM-BHP-10

The 7760AVM-BHP Bulkhead Breakout Panel can be used to connect up to five or ten 7760AVM, 7760AVM2 and 7735AVC-LB modules. Each of the ten sets of connectors on the breakout panel is fitted with two BNCs for audio in or out, two six position terminal strips for the 4 channels of analog audio, and one six position terminal strip for the GPI I/O and RS-232 signals.

7761AVM-4A-BHP-7

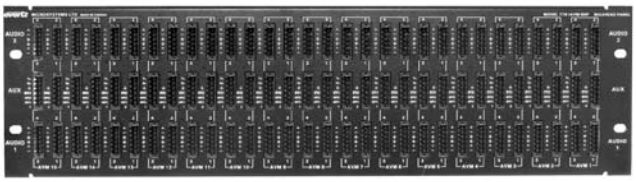

The 7761AVM-4A-BHP Bulkhead Breakout Panel is available to facilitate wiring to the DB-25 connector. This 3RU panel allows for convenient audio, GPI/O and RS-232 connections for up to fifteen 7761AVM-DC modules.

7765AVM-4A-BHP-7

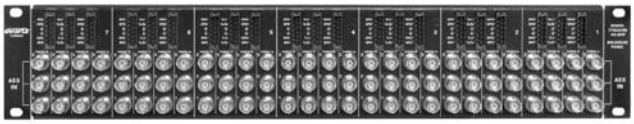

The 7765AVM-4A-BHP Bulkhead Breakout Panel provides a convenient way of connecting AES/EBU audio and GPI I/O signals into the DB-25 on up to seven 7765AVM-4A modules.

7766AVM-4A-BHP-1 & 7766AVM-4A-BHP-4

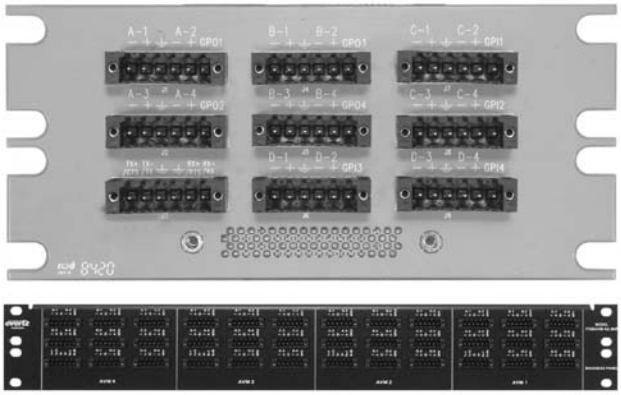

The 7766AVM-4A-BHP-1 & 7766AVM-4A-BHP-4 Bulkhead Breakout Panels provide a convenient interconnection to the 7766AVM-4A Analog Quattro™ and Analog Multiviewer modules, 68-pin rear plate SCSI connector. This is used to link analog audio inputs and AUX I/O signals to the module.

7767BHP-AUX (included with every VIP4 or VIP12 module)

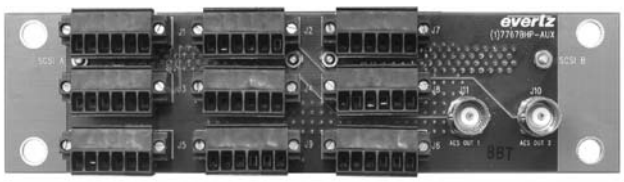

The 7767BHP-AUX is outfitted with eight terminal blocks and provides connectivity for GPI (20), GPI (8), LTC, serial RS-232/422 and one group AES outputs. The 7767BHP-AUX is included with every VIP4, VIP8 and VIP12 module.

7767BHP-BAUX (included with 7767VIP-AI-U)

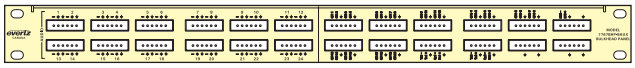

The 7767BHP-BAUX provides terminal blocks for mappable balanced analog audio inputs to the VIP™ module. In addition, this breakout panel is also outfitted with the complete set of GPI (20), GPO (8), LTC differential inputs, serial ports (RS-232/RS-422) and one group AES outputs. It is possible to provide up to 4 unbalanced AES/EBU inputs per video input channel on the VIP™. This breakout panel replaces the 7767BHP-AUX.

7767BHP-UAUX (included with 7767VIP-AI-U)

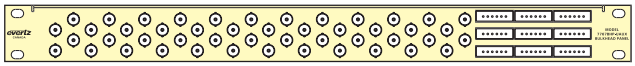

The 7767BHP-UAUX provides unbalanced AES/EBU inputs via BNCs to the VIP™ module. It is possible to provide up to 4 unbalanced AES/EBU inputs per video input channel on the VIP™. In addition, this breakout panel is also outfitted with the complete set of GPI(20), GPI (8), LTC differential inputs one serial port (RS-232/RS-422) and one group AES output. This breakout panel replaces the 7767BHP-AUX.

3000MKT-AUX

For mounting convenience, a BHP mounting kit (3000MKT-AUX) is available with mounting hardware. It is shown in the picture above with two mounted AUX-BHPs.

Ordering Information

7760AVM-BHP-5	Bulkhead Breakout Panel for 5x7760AVMs (includes 5x3ft cables)
7760AVM-BHP-10	Bulkhead Breakout Panel for 10x7760AVMs (includes 10x3ft cables)
	Optional Cables: WPAVMIO-1-0-1F (1ft Adapter Cable)
	WPAVMIO-1-0-3F (3ft Adapter Cable)
	WPAVMIO-1-0-6F (6ft Adapter Cable)
7761AVM-DC-BHP-15	Bulkhead Breakout Panel for 15x7761AVM-DCs (includes 15x3ft cables)
7765AVM-4A-BHP-7	Bulkhead Breakout Panel for 7x7765AVM-4A (includes 7x3ft cables)
7766AVM-4A-BHP-4	Bulkhead Breakout Panel for 4x7766AVM-4A (includes 4x3ft cables)
7766AVM-4A-BHP-1	Bulkhead Breakout Panel for 1x7766AVM-4A (includes 1x3ft cable)
7767VIP-AI-U	Discrete unbalanced AES/EBU audio input (4 AES per video input) support with breakout panel
7767VIP-AI-BAL	Discrete balanced analog audio input support with breakout panel
3000MKT-AUX	Dual BHP-AUX auxiliary GPI/O and serial break-out panel rack mounting kit

Note: If additional breakout panels are required, contact factory for ordering information.

7700FR-C, 7701FR, S7701FR, S7702FR

7700 & 7701 Series Multiframes

7700FR-C

7701FR

The 7700FR-C, 7701FR & S7701FR Multiframes are ideal solutions to today's vast digital video and audio processing and distribution requirements. They provide flexibility to handle the high-speed requirements of HDTV as well as Analog and SDTV. The Multiframes support extraction of the modules from the front without compromising performance even at 1.5Gb/s. Hot extraction is supported on various types of interfaces including VIDEO, AUDIO and FIBER.

The 7700FR-C Multiframes are 3RU frames designed to house up to 15 single slot modules, the 7701FR Multiframe is a 1RU frame designed to house up to 3 single or dual slot modules both in various combinations and configurations, and the S7701FR Multiframe is a single frame designed to house 1 single slot module or dual slot module.

S7701FR
with Rackmount Tray

Features & Benefits

- Power supply and cooling fan are front extractable
- Houses up to 15 front loading processing modules with I/O for the 7700FR-C and 3 for the 7701FR
- Each slot has individually configurable inputs and outputs
- Monitoring window for verifying modules status and power supply status
- 7700FR-C can house a 7700FC VistaLINK® Frame Controller in slot 1 which will allow for remote control and monitoring of VistaLINK® - capable products via SNMP over TCP/IP
- Frame status contact closure/open on power supply failure, fan failures and user-selectable module alarms
- High-speed bussing and control system provided for modular applications
- A relay based contact closure is provided with common, ground, normally open and normally closed contacts
- No recabling required when hot swapping modules
- Optional redundant power supply for the 3RU 7700FR-C and 1RU 7701FR
- 7700FR-C may be ordered with 48V DC power supplies

Single Module Standalone Enclosure

- Portable
- Powered by an external 12V DC adapter (included)
- Supports both single slot and dual slot modules
- Optional rack mount panel mounts 3 S7701FR enclosures in 1RU rack space

Specifications

Electrical:

Power Supply Configuration:

7700FR-C:	Dual, redundant, separate AC inlets
7700FR-C-48VDC:	Dual, redundant, separate DC inlets on terminal strips
7701FR:	Standard single, optional external redundant
S7701FR:	External power supply adapter

Voltage:

7700FR-C:	Auto ranging, 100 to 240V AC, 50/60Hz
7700FR-C-48VDC:	36V to 60V DC
7701FR:	Auto ranging, 100 to 240V AC, 50/60Hz
S7701FR:	12V DC Nominal Auto ranging, 100 to 240V AC power adapter included

Maximum Operating Current:

7700FR-C:	2.9A (@120V AC), 1.8A (@240V AC)
7700FR-C-48VDC:	5.2A (@48V DC)

Maximum Power Consumption:

7700FR:	250W
7700FR-C-48VDC:	250W
7701FR:	100W
S7701FR:	36W

Maximun Module Load:

7700FR:	200W (13.3W per slot)
7700FR-C48VDC:	200W (13.3W per slot)
7701FR:	80W (26W per slot)

Fuses:

7700FR-C:	4 amp, 250V time delay 5x20mm - line and neutral
7700FR-C-48VDC:	10 amp, 250V time delay 5x20mm
7701FR:	2 amp, 250V time delay 5x20mm - line and neutral
S7701FR:	Internal self resetting fuse

Certification:

Safety:	CSA Listed Complies with EU Safety Directive
EMC:	Complies with FCC part 15, Class A Complies with EU EMC Directives

Front Panel Indicators:

	PSU status LED, Local Error/Failure
Tally Output:	4-pin terminal, relay N/O, N/C for status/fault alarm

Physical:

Dimensions:

7700FR-C:	19"W x 5.25"H x 14.5"D (483mm W x 133mm H x 368mm D)
7700FR-C-48VDC:	19"W x 5.25"H x 14.5"D (483mm W x 133mm H x 368mm D)
7701FR:	19"W x 1.75"H x 14.5"D (483mm W x 45mm H x 368mm D)
S7701FR:	5"W x 1.75"H x 14.5"D (127mm W x 45mm H x 368mm D)
Temperature:	0-40°C

Module Capacity:

7700FR-C:	15 single slot modules
7700FR-C-48VDC:	15 single slot modules
7701FR:	3 single or dual slot modules
S7701FR:	1 single or dual slot module

Weight:

7700FR-C:	32lbs (14.5kg) Full 17.4lbs (8kg) Empty
7700FR-C-48VDC:	32lbs (14.5kg) Full 17.4lbs (8kg) Empty
7701FR:	10lbs (4.5kg) Full 7lbs (3.1kg) Empty
S7701FR:	1.3lbs (.58kg)

Ordering Information

7700FR-C	3RU Multiframe which holds up to 15 single slot modules with AC power supply
7700FR-CR	3RU Multiframe which holds up to 15 single slot modules without power supply
7700FR-C-48VDC	3RU Multiframe which holds up to 15 single slot modules with 48DC power supply
7701FR	1RU Multiframe which holds up to 3 single or dual slot modules
S7701FR	Standalone frame which holds 1 single slot or 1 dual slot module with power supply
S7702FR	Standalone frame which holds 1-3 lot module with power supply

Ordering Options and Accessories for 7700FR-C & 7700FR-C-48-VDC Frames

+7PS	Redundant power supply for 7700FR-C
+48PS	Redundant power supply for 7700FR-C-48V DC
7700PS	Additional power supply for 7700FR
7700PS-48VDC	Additional power supply for 7700FR-C-48V DC
7700RS-15	Rear support kit 15" for 7700 Frame

For 7701FR Frame

+PSX	Optional external redundant power supply for 7701FR when ordered with frame
7701PSX	Optional external power supply for 7701FR for existing hardware
7701PS	Internal power supply for 7701FR (replacement or spare orders only)

For S7701FR Frame

S7701P	Rear connector plate for Standalone frame (price applies when ordered separately; discounted when ordered with module)
S7701FR-RP	Rackmount panel mounts 3XS7701FR enclosures in 1RU rack space

Note: Some 7700 series modules cannot be accommodated in the 1RU standalone enclosure. See individual product brochure or contact factory.

The 7700R-SC System Controller handles the management of the routers as well as providing additional redundancy features. With its Ethernet networking and comprehensive interface connections the 7700R-SC provides an expandable platform to manage future communication and interface requirements for very large routing systems.

The 7700R is a 2 slot module and fits within the 7700FR 3RU frame. By using a real-time operating system the 7700R-SC has been specifically designed to avoid slow operation and slow boot-up time normally associated with PC based solutions.

SNMP monitoring support via VLPRO, along with with Ethernet connectivity to WinSetup allow efficient monitoring and configuration of the 7700R-SC system controller

Features & Benefits

- Single controller module, or two for redundancy, with automatic and manual changeover. Supports hot swap and changeover with total transparency
- Fast boot-up time
- Panels can be re-configured without disturbing the rest of the system
- NVRAM for crosspoint status storage
- Four Q-Link ports as standard, allows for small groups of panels on each link providing protection against one link being damaged and maintaining high speed
- Four serial ports as standard
- Ability to change the Q-Links from 4 single ports to 2 looped ports by jumper selection
- WinSetup can be used to configure for RS232 or RS422 and choose the protocol type on a port-by-port basis
- Ethernet port supporting TCP/IP protocol for configuration file downloading and router control. A separate port for each controller connects providing the ultimate in protection if one controller fails
- Fully supports Quartz WinSetup and WinControl software
- Support of the SNMP remote monitoring protocol

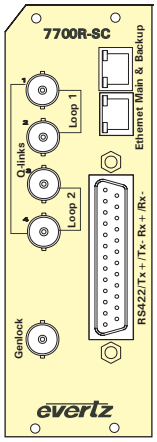

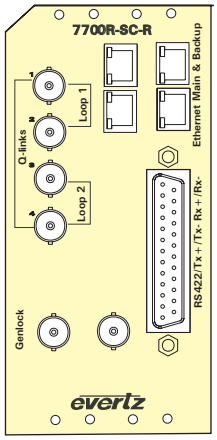

Specifications

Q-LINK:
Number: 4 single or 2 looped (jumper selectable)
Connector: 75Ω video cable 500m max. length

Serial Ports:
Number of Ports: 4 RS-232/422
Connector: DB25

Genlock Input:
Type: HD Tri-Level sync, NTSC or PAL Color Black 1V p-p
Connector: BNC per IEC 60169-8 Amendment 2
Termination: 75Ω (jumper selectable)

General Purpose Interface I/O (GPI/GPO):
Number of Inputs: 6
Type:
GPI: 1 Opto-isolated, active low with internal pull-ups to +5V
GPO: 1 Relay closure to ground
Connector: DB25
Input Signal: Closure to ground

Supported 3rd Party Router Protocols
Quartz
Evertz MVP™
Evertz VistaLINK® PRO
Pro-Bel
Omnibus
Grass Valley
Thomson
Sony
Philips
Leitch
Snell & Wilcox
Utah Scientific
VikinX
TSL
Nvision
BTS
Pesa
Ensemble

Supported 3rd Party Automation Protocols
BFE Studio and Medien Systeme GmbH
Broadcast Solutions GmbH
Crispin
DNF Controls
EVS Broadcast Equipment
Florical
Grass Valley
Harris Broadcast Comm Division
Novus
OmniBus Systems Limited
Pro-Bel
Philips
Siemens
Sundance
Tanderg Television

Ordering Information

Each System Controller ships with a single processor and power supply as standard

7700R-SC	System Controller, single processor
7700R-SC-R	Redundant System Controller and Rear Panel

7700FC

VistaLINK® Frame Controller

The 7700FC VistaLINK® Frame Controller card provides a single point of access to communicate with VistaLINK® - capable modules. The 7700FC VistaLINK® Frame Controller provides a 10Base-T/100Base-TX Ethernet port, and communication is facilitated through the use of Simple Network Management Protocol (SNMP).

The 7700FC VistaLINK® Frame Controller handles all SNMP communications between the frame (7700FR-C) and the network manager (NMS), and serves as a gateway to individual cards in the frame. The 7700FC VistaLINK® Frame Controller also provides an RS-232 serial port interface for customer configurations.

Features & Benefits

- Complies with IEEE 802.3 100Base-TX and 10Base-T Ethernet standards
- 100Mb/s Fast Ethernet or 10Mb/s Ethernet data transfer, selected by auto-negotiation
- Full-duplex or half-duplex operation, selected by auto-negotiation
- RJ-45 connector for network cable connection
- RS-232 serial control port for configuration
- Card edge LEDs indicate module fault, microprocessor state, activity and link status
- Rear panel LEDs indicate Ethernet link, activity and speed
- Supports "ftp" upgrades for frame-wide firmware upgrades (product specific)
- Includes VistaLINK® PRO (VLPRO-C) module software configuration tool
- Provides frame/chassis status information through VistaLINK® including power supply status, frame status, card insertion/removal counters, 7700FC software version number and LED control

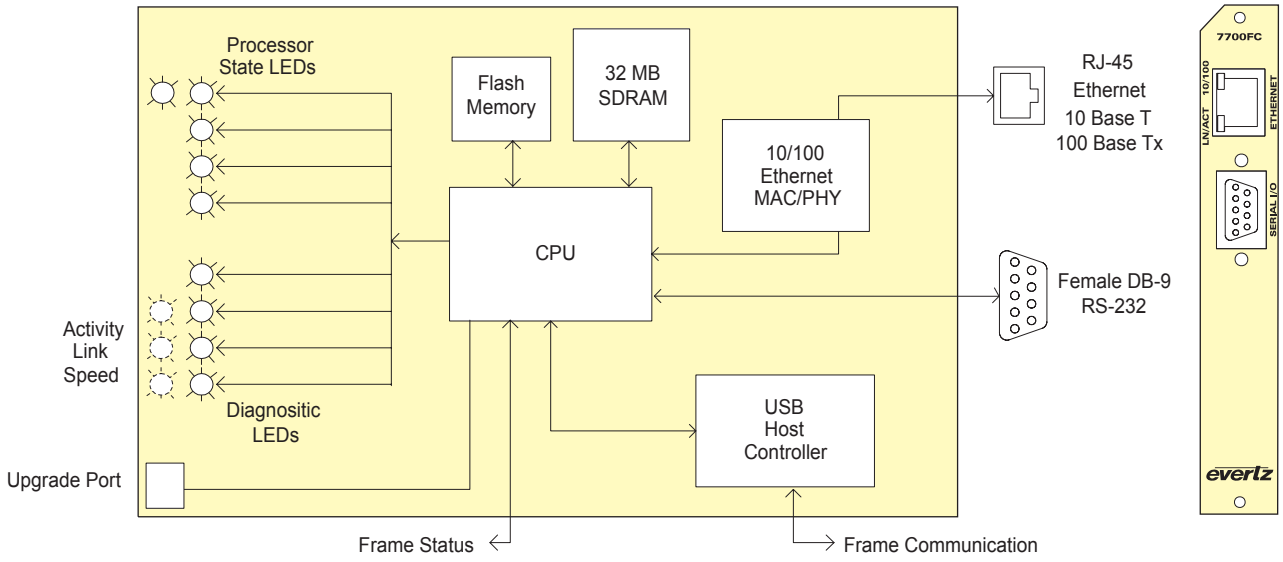

Specifications

Ethernet:

Network Type:	Fast Ethernet 100 Base-TX IEEE 802.3u standard for 100Mb/s baseband CSMA/CD local area network Ethernet 10 Base-T IEEE 802.3 standard for 10Mb/s baseband CSMA/CD local area network
Connector:	RJ-45

Serial I/O:

Standard:	RS-232
Connector:	Female DB-9
Baud Rate:	57,600
Format:	8 bits, no parity, 2 stop bits, no flow control

Electrical:

Voltage:	+12V DC
Power:	7W
EMI/RFI:	Complies with FCC Part 15, Class A EU EMC directive

Physical:

Number of slots:	1

Ordering Information

7700FC	VistaLINK® Frame Controller

Ordering Options

Rear Plate Suffix

+3RU	3RU Rear Plate for use with 7700FR-C Multiframe

Enclosure

7700FR-C	3RU Multiframe

7700GPI

VistaLINK® General Purpose Interface Module

The 7700GPI VistaLINK® General Purpose Interface module links third-party equipment and Evertz VistaLINK® Network Management System (NMS). Third-party equipment with fault alarming capabilities through General Purpose Interface outputs (GPOs) can communicate fault alarm conditions to the VistaLINK® application software through this GPO to SNMP translator, thereby extending fault monitoring capabilities across the broadcast network.

Equipped with a Linear Time Code (LTC) input, the 7700GPI module can synchronize logged fault alarms within the VistaLINK® application software with the facility clock for accurate alarm acknowledgement and record-keeping. In addition, it is possible to label each GPI input for easier notification. The label follows the fault message (trap) through to the VistaLINK® PRO server and onto email/pager notifications (if enabled).

The GPI module is also equipped with three NC/NO GPI outputs (GPO) and can be utilized to relay a "message" from the VistaLINK® system to connected gear. Configuration changes or additional fault alarming are possible through this interface.

VistaLINK® offers remote monitoring, control and configuration capabilities via Simple Network Management Protocol (SNMP) giving the flexibility to manage operations, including signal monitoring and module configuration from SNMP-capable control systems (Manager or NMS).

Features & Benefits

- 20 opto-isolated General Purpose Interface inputs (GPI)
- Enabled GPI inputs/alerts translated and reported to Network Management System (NMS) user interface via SNMP
- Selectable +5V or +12V supply for driving GPI over longer cable runs
- 3 relay closure General Purpose Interface outputs (GPO)
- GPI/GPO easily accessed through pin-headers (2x6 Phoenix Terminal Blocks) on rear plate
- 1 LTC input for module synchronization of fault alarms to facility time
- Modular, conveniently fits into 7700FR-C 3RU frame
- Module status LED and 20 GPI LEDs for simple GPI input diagnostics
- Frame status trigger
- Jumper-configurable RS-232/RS-422 input serial COM port for serial protocol interface translation
- VistaLINK® - capable for remote monitoring and control via SNMP (using VistaLINK® PRO) when installed in 7700FR-C frame with 7700FC VistaLINK® Frame Controller

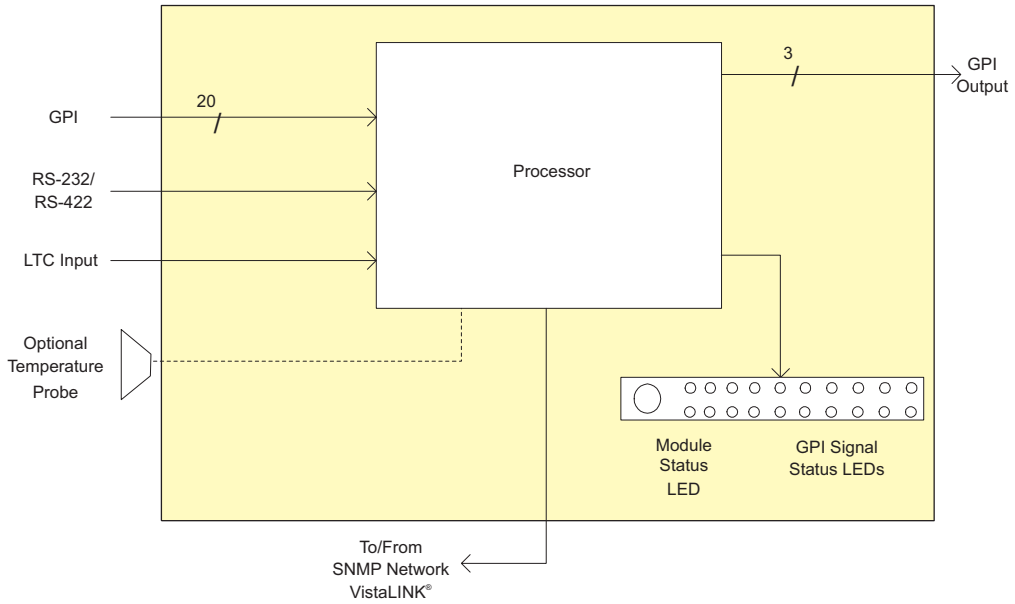

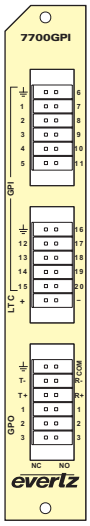

Specifications

General Purpose Interface Input:

Number of Inputs:	20
Type:	Opto-isolated, active low with jumper selectable +5V or +12V supplied voltage
Connector:	Phoenix Terminal Block (2x6)
Signal Level:	Jumper selectable +5V or +12V

General Purpose Interface Output:

Number of Outputs:	3
Type:	"Dry Contact" relay closure
Connector:	2 pins per output on Phoenix Terminal Block (2x6)
Signal Level:	Normally closed and normally open

LTC Input:

Number of Inputs:	1 (±pair)
Type:	Balanced
Level:	100mV p-p
Connector:	Phoenix Terminal Block pins (2x6)

Data Input Serial Port:

Number of Ports:	1 RS-232 or 1 RS-422 (jumper selectable)
Connector:	Phoenix Terminal Block pins (2x6)
Baud Rate:	Up to 1Mbaud

Electrical:

Voltage:	+12V DC
Power:	6W
EMI/RFI:	Complies with FCC Part 15, Class A EU EMC Directive

Physical:

Number of slots:	1

Ordering Information

7700GPI	VistaLINK® General Purpose Interface Module

Ordering Options Rear Plate and Fiber Connector must be specified at time of order
Eg: Model +SC +3RU

Rear Plate Suffix
+3RU 3RU Rear Plate for use with 7700FR-C Multiframe

Enclosures
7700FR-C 3RU Multiframe which holds up to 15 single slot modules

7700PTX

Universal Protocol Translator

The 7700PTX Universal Protocol Translator module provides the ability for Evertz VistaLINK® and MVP™ software to interface directly to third party UMD devices and routers.

The 7700PTX communicates with the router and UMD protocols either via one of four serial ports or using a built in Ethernet port. All ports - both serial and Ethernet - are bi-directional allowing the device complete flexibility for communication. The 7700PTX is equipped with 20 general purpose inputs and 8 general purpose outputs that can be used to connect to third party devices for the purpose of alarming or tally. A single LTC port allows the 7700PTX to connect to external time of day references.

The following protocols are supported by the specified version of 7700PTX card:

7700PTX-MVP	Image Video, TSL, Leitch UDT5700, and GPI/O protocol support
7700PTX-SX	Miranda PressMaster protocol support
7700PTX-XY	Leitch XY Integrator protocol support
7700PTX-CTP	Contribution Tally Protocol support (GVG Switcher, Ross Switcher)
7700PTX-10XL	GVG 10XL protocol support for router control
7700PTX-D28	Datatek D2800 protocol support for router control
7700PTX-D20	Datatek D2000 protocol support for router control
7700PTX-RCL	Router Control Language protocol (GVG Encore) for router control
7700PTX-NV	Nvision router and server protocol support for router control
7700PTX-VMSI	VMSI protocol support (GVG Jupiter) for router control
7700PTX-AP	Andromeda UMD/tally protocol support (GVG ASCII plus)
7700PTX-PESA	Pesa CPU link protocol No. 1 support for router control
7700PTX-QUTZ	Quartz router switcher remote control protocol type 1 support for router control

Note: For other protocols not listed here please contact the factory.

Features & Benefits

- 4 serial ports RS232/422 selectable
- 20 opto-isolated General Purpose inputs (GPI)
- Selectable +5V or +12V supply for driving GPI over longer cable runs
- 8 relay closure General Purpose Interface outputs (GPO)
- GPI/GPO easily accessed through pin-headers (2x6 Phoenix Terminal Blocks) on rear plate
- 1 LTC input for module synchronization of fault alarms to facility time (feature not available at time of printing)
- Modular, conveniently fits into 7700FR-C 3RU frame
- Module status LED and 20 GPI LEDs for simple GPI input diagnostics
- Frame status trigger
- VistaLINK® - capable for remote monitoring and control via SNMP (using VistaLINK® PRO)

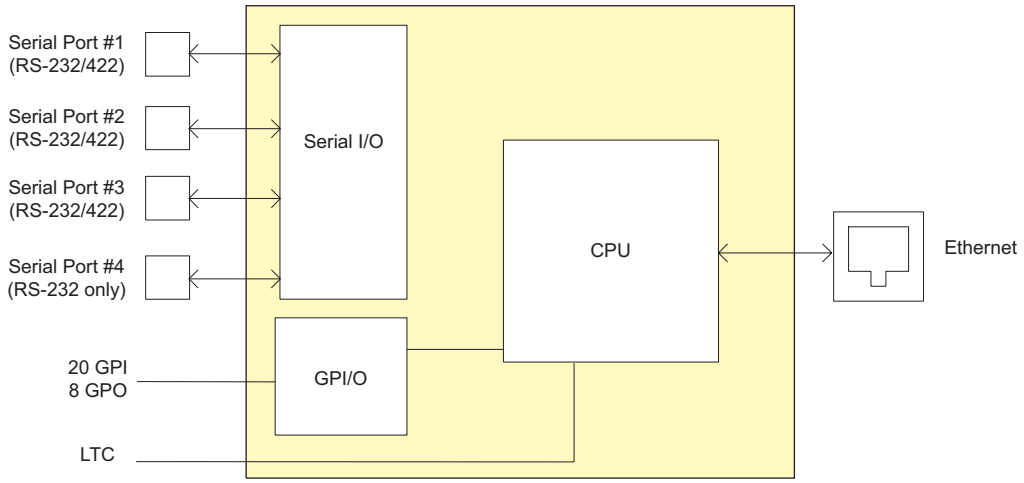

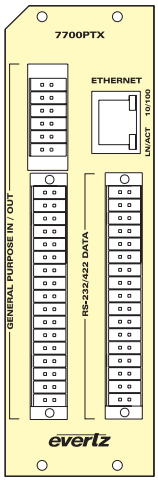

Specifications

General Purpose Interface Input:

Number of Inputs:	20
Type:	Opto-isolated, active low with jumper selectable +5V or +12V supplied voltage
Connector:	Phoenix Terminal Block
Signal Level:	Jumper selectable +5V or +12V

General Purpose Interface Output:

Number of Outputs:	8
Type:	"Dry Contact" relay closure
Connector:	2 pins per output on Phoenix Terminal Block
Signal Level:	Normally closed and normally open

LTC Input:

Number of Inputs:	1 (± pair)
Type:	Balanced
Level:	0.2 to 4V p-p balanced or unbalanced
Connector:	Phoenix Terminal Block pins

Data Input Serial Port:

Number of Ports:	4 RS-232 or 3 RS-422
Connector:	Phoenix Terminal Block pins
Baud Rate:	Up to 1Mbaud

Electrical:

Voltage:	+12V DC
Power:	< 6W
Safety:	ETL Listed, complies with EU safety directives
EMI/RFI:	Complies with FCC Part 15, Class A EU EMC Directive

Physical:

Number of slots:	2

Ordering Information

7700PTX-MVP	PTX which drives UMDs
7700PTX-SX	PTX which interfaces with Miranda Press Station
7700PTX-XY	PTX which interfaces with Leitch-XY integrator
7700PTX-CTP	PTX which interfaces with Ross switcher
7700PTX-10XL	PTX which controls 10XL-based routers
7700PTX-D28	PTX which controls Datatek D-2800 based router
7700PTX-D20	PTX which controls Datatek D-2000 based router
7700PTX-RCL	PTX which controls GVC RCL based router
7700PTX-NV	PTX which controls NVISION based router
7700PTX-VMSI	PTS which controls VMSI based router
7700PTX-AP	PTX which controls UMD/tally based router
7700PTX-PESA	PTX which controls Pesa protocol based router
7700PTS-QUTZ	PTX which controls Quartz based router

Note: For other protocols not listed here please contact the factory.

Ordering Options	Rear Plate must be specified at time of order Eg: Model +3RU
Rear Plate Suffix	
+3RU	3RU Rear Plate for use with 7700FR-C Multiframe
+1RU	1RU Rear Plate for use with 7701FR Multiframe
+SA	Standalone Enclosure Rear Plate
Enclosures	
7700FR-C	3RU Multiframe which holds up to 15 single slot modules
7701FR	1RU Multiframe which holds up to 3 single or dual slot modules
S7701FR	Standalone enclosure

The 7700TPI VistaLINK® module links third-party equipment and Evertz VistaLINK® Network Management System (NMS). Third-party equipment with fault alarming capabilities via General Purpose Outputs (GPO), serial RS-232/422/485 connection, or Ethernet can communicate fault alarm conditions to the VistaLINK® application software through the 7700TPI to SNMP translator, thereby extending fault monitoring capabilities across the broadcast network.

The 7700TPI comes equipped with 4 RS-232/422/485 serial ports and 1 10/100Mb Ethernet port. These ports can also be utilized to communicate and provide remote control to third-party equipment.

The 7700TPI module is also equipped with 8 General Purpose Outputs (GPO) and can be utilized to relay a state level from the VistaLINK® system to connected gear. Configuration changes or additional fault alarming are also possible through this interface.

The 7700TPI module fits conveniently into Evertz universally installed 7700FR-C frame and provides a cost-effective and space-efficient third-party interface (TPI) solution.

VistaLINK® offers remote monitoring, control and configuration capabilities via Simple Network Management Protocol (SNMP) giving the flexibility to manage operations, including signal monitoring and module configuration from SNMP - capable control systems (Manager or NMS).

Features & Benefits

- 20 opto-isolated General Purpose Inputs (GPI)
- Enabled GPI alerts translated and reported to Network Management System (NMS) user interface via SNMP
- Selectable +5V or +12V supply for driving GPI over longer cable runs
- 8 relay closure General Purpose Outputs (GPO)
- 4 serial ports RS-232/422 selectable
- GPI/GPO/Serial connections easily accessed through pin-headers (Phoenix Terminal Blocks) on rear plate
- Modular, conveniently fits into 7700FR-C 3RU frame
- Module status LED and simple GPI input diagnostics
- Frame status trigger
- VistaLINK® -capable for remote monitoring and control via SNMP (using VistaLINK® PRO) when installed in 7700FR-C frame with 7700FC VistaLINK® Frame Controller

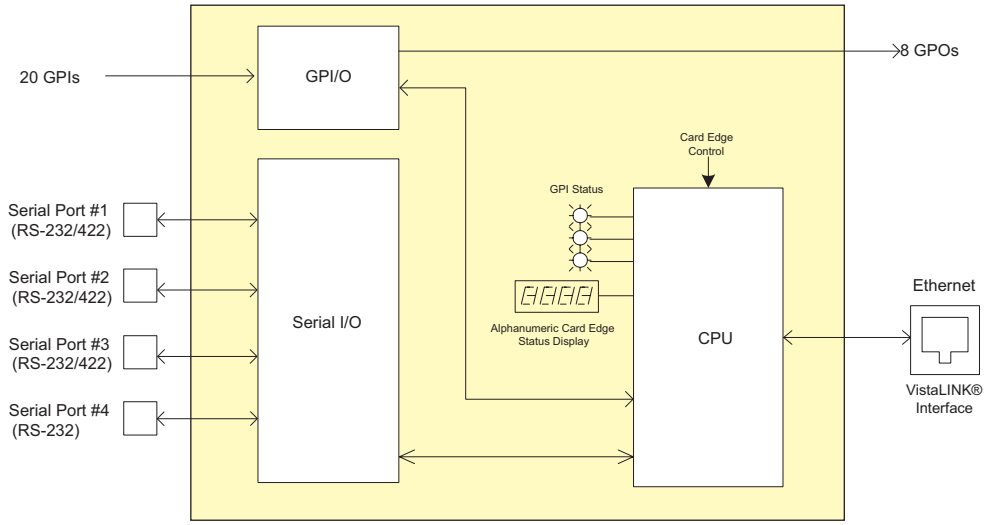

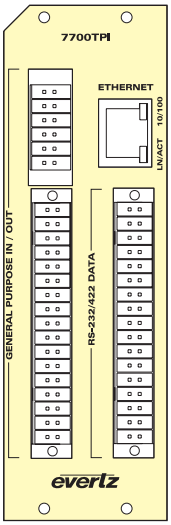

Specifications

General Purpose Inputs:
Number of Inputs: 20
Type: Opto-isolated, active low with jumper selectable +5V or +12V supplied voltage
Connector: Phoenix Terminal Block
Signal Level: Jumper selectable +5V or +12V

General Purpose Outputs:
Number of Outputs: 8
Type: "Dry Contact" relay closure
Connector: 2 pins per output on Phoenix Terminal Block
Signal Level: Normally Closed and Normally Open

Data Input Serial Port:
Number of Ports: 4 RS-232 or 3 RS-422
Connector: Phoenix Terminal Block pins
Baud Rate: User selectable, up to 115,200 bps

Electrical:
Voltage: +12V DC
Power: < 6W
Safety: ETL Listed, complies with EU safety directives
EMI/RFI: Complies with FCC Part 15, Class A EU EMC Directive

Physical:
Number of slots 2

Ordering Information

7700TPI	VistaLINK® Third Party Interface
7700TPI-TRI2CD1	Emergency Alert System Trilithic to CODI Protocol Translator

Ordering Options Rear Plate and Fiber Connector must be specified at time of order
Eg: Model +SC +3RU

Rear Plate Suffix
+3RU 3RU Rear Plate for use with 7700FR-C Multiframe

Enclosures
7700FR-C 3RU Multiframe which holds up to 15 single slot modules

9000NCP

VistaLINK® Network Control Panel (1RU)

The 1RU 9000NCP VistaLINK® Network Control Panel (NCP) is a low-powered, rack mounted control panel interfacing to VistaLINK® - capable frames and modules, allowing for real-time selection and configuration control of enabled parameters.

The 9000NCP connects to the network via Ethernet and communicates via Simple Network Management Protocol (SNMP).

In its simplest network configuration, the 9000NCP can be directly connected to a single frame's 7700FC VistaLINK® Frame Controller via a cross-over network cable.

The 9000NCP is used to control a subset of an enabled module's full parameter set. Specifically "proc amp" functions such as video & audio level adjustments and gain control are adjustable through the 9000NCP.

Features & Benefits

- Low power, rack-mountable and compact 1RU control panel
- Single, 4-line, 24 alphanumeric digit per line vacuum fluorescent display (VFD) featuring very high brightness and widest viewing angles
- 16 (8+Shift Key) illuminated, tactile and full-size quick-access pushbuttons with position and selector rotary control (shaft encoder)
- Built-in Simple Network Management Protocol (SNMP) communication interface over Ethernet connection
- Operational configuration control of key VistaLINK® - capable product parameters (visit www.evertz.com for updated list of modules and parameters)
- Quick access preset button, frame and card labels, and configuration privileges control available via VistaLINK®

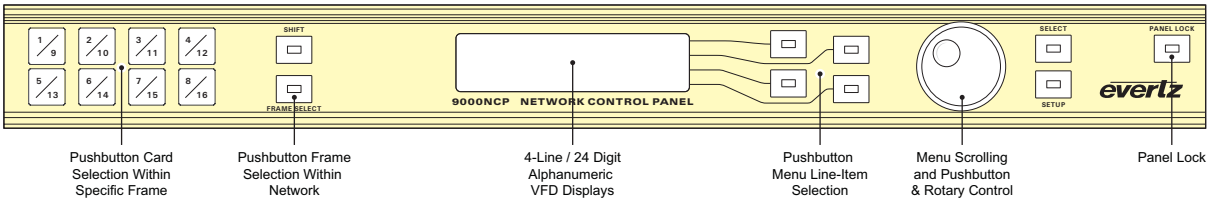

Specifications

Serial I/O (COM1):

Standard:	RS-232
Connector:	FemaledB-9
Baud Rate:	57,600
Format:	8 bits, no parity, 2 stop bits, no hardware flow control (COM2 not available)

Ethernet Input/Output:

Standard:	IEEE 802.3 (10BaseT), IEEE 8002.3u (100BaseTx)
Connector:	1 RJ45

Cable Requirements:

10 Base T:	UTP category 3, 4 or 5 cable up to 328ft/100m (2 pairs)
100 Base Tx:	UTP category 5 cable up to 328ft/100m (2 pairs)

Electrical:

Voltage:	+12V DC Auto ranging, 100 to 240V AC, power adapter provided
Power:	9W
EMI/RFI:	Complies with FCC Part 15, class A EU EMC Directive

Physical

Dimensions:	19"W x 4.75"D x 1.75"H (483mm x 111mm x 45mm)
Weight:	3lbs (1.36kg)
Temperature:	0-50°C (Operating)

Ordering Information

9000NCP	VistaLINK® Network Control Panel (1RU)

The 2RU 9000NCP2 VistaLINK® Network Control Panel (NCP) is a low-powered, rack mounted control panel interfacing to VistaLINK® - capable frames and modules, allowing for real-time selection and configuration control of enabled parameters.

The 9000NCP2 NCP connects to the network via Ethernet and communicates via Simple Network Management Protocol (SNMP).

In its simplest network configuration, the NCP2 can be directly connected to a single frame via the frame controller using a cross-over network cable. In advanced systems, multiple NCPs can be connected within the same network, each capable of configuring all addressable parameters in every networked frame, or limited to a certain, user-defined set of frames, cards or parameters. With Evertz VistaLINK® PRO server running on the same network, NCP units are further enabled with custom labels, preset quick-access configuration buttons and masking/privilege control.

Features & Benefits

- Low power, rack-mountable, 2RU control panel
- Two, 4-line, 24 alphanumeric digit per line vacuum fluorescent display (VFD) featuring very high brightness and widest viewing angles
- 44 illuminated, tactile and full-size quick access pushbuttons with four position and selector rotary controls (shaft encoders)
- Provides convenient and fast configuration access for up to 4 simultaneous proc controls via split-screen display feature
- Built-in Simple Network Management Protocol (SNMP) communication interface over Ethernet connection
- Operational configuration control of key VistaLINK® - capable product parameters (visit www.evertz.com for updated list of modules and parameters)
- Quick access preset button, frame and card labels, and configuration privileges control available via VistaLINK®

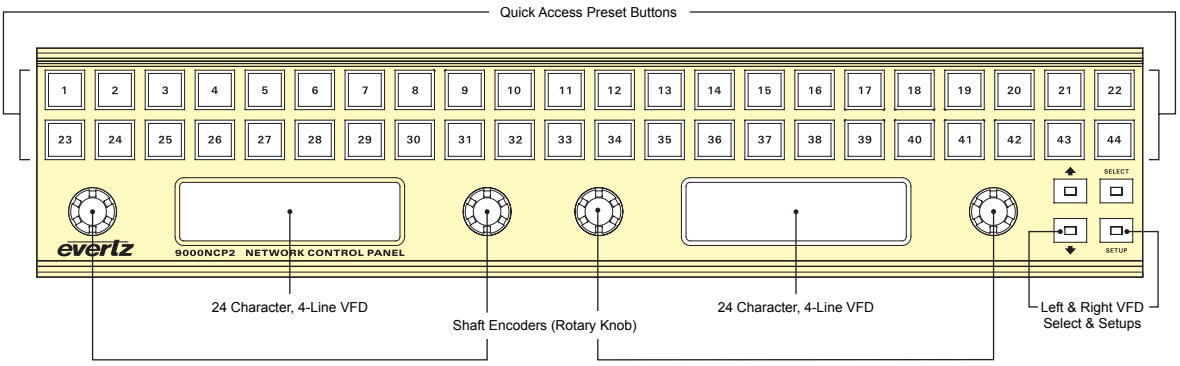

Specifications

Serial I/O (COM1):

Standard:	RS-232
Connector:	FemaledB-9
Baud Rate:	57,600
Format:	8 bits, no parity, 2 stop bits, no hardware flow control (COM2 not available)

Ethernet Input/Output:

Standard:	IEEE 802.3 (10BaseT), IEEE 8002.3u (100BaseTx)
Connector:	1 RJ45
Cable Requirements:	
10 Base T:	UTP category 3, 4 or 5 cable up to 328ft/100m (2 pairs)
100 Base Tx:	UTP category 5 cable up to 328ft/100m (2 pairs)

Electrical:

Voltage:	+12V DC Auto ranging, 100 to 240V AC, power adapter provided
Power:	11W
EMI/RFI:	Complies with FCC Part 15, Class A EU EMC Directive

Physical:

Dimensions:	19" W x 4.375" D x 3.5" H (483mm x 111mm x 89mm)
Weight:	9000NCP2 - 4lbs (1.81kg)
Temperature:	0-50°C (Operating)

Ordering Information

9000NCP-2	VistaLINK® Network Control Panel (2RU)

7700R2x2-HD, 7700RD2x2-HD, & 7700R2x2-HES

2x2 HD/SD Modular Bypass Protection Routers

The 7700R2x2 series modules are bypass protection routers for high definition 1.5Gb/s or standard definition 270Mb/s serial digital video signals. These modules have two SD/HD compatible inputs signals (program and back-up) that support all popular SMPTE 292M video formats as well as 525/625 line SMPTE 259M-C video formats. These modules also provide three re-clocked primary outputs, and one re-clocked backup output. Based on a programmable set of input signal monitors, the main program or the back-up input signals can be automatically routed to the primary program outputs to ensure the delivery of a valid program output in the case of an input signal fault. Switching can also be controlled and monitored through the use of module GPIOs, card edge controls or remotely using either network control panels (9000NCP, 9000NCP2) or VistaLINK® PRO. The program output is bypass relay protected and provides protection on the program path. If the module is removed from the enclosure or power to the module is lost, the program path is maintained.

The 7700R2X2-HES incorporates Evertz proprietary SoftSwitch™ technology, for clean video and "popless" embedded audio switching. Line synchronizers on the video inputs can accommodate differences in timing of up to ±1/2 a line on the video inputs. The 7700RD2X2-HD provides two monitoring down-converted outputs.

The 7700R2X2-HD and 7700R2X2-HES occupy one card slot and can be housed in the 3RU 7700FR frame, which will hold up to 15 single-slot modules, or one slot within the 1RU frame, which will hold up to three modules. The 7700RD2X2-HD modules occupy two slots within the 3RU 7700FR frame and one slot within the 1RU frame.

The 7700R2x2-HD provides additional MPEG-2 feed redundancy switching. By providing automatic smart switching of the main signal to a back up signal, the 7700R2x2-HD offers protection to digital compressed signals. The user can customize all monitored and switching rules to meet Broadcast, Cable, Satellite and IPTV needs.

Features & Benefits

- Support for HD and SD SDI inputs per SMPTE 292M and SMPTE 259M-C
- Auto sensing of HD and SD input formats
- Supports both 525i/59.94 or 625i/50 SD video formats
- Automatic change-over based on programmable input signal monitors
- Generation of three re-clocked program outputs and one preview output (HD if HD inputs are applied, SD if SD inputs are applied)
- GPI control inputs for manual routing control
- GPO status outputs for reporting selector cross-point status
- Card edge menu control for configuration of operating modes
- Card edge LEDs for reporting signal presence, router state, module status
- Remote monitoring through NCP panels or VistaLINK® PRO
- Bypass relay protection on program output
- Controllable switch point when a Genlock reference is provided

Additional features on 7700RD2X2-HD model only

- Program and preview monitoring SDI outputs (down-converted from HD if HD input applied, reclocked SD if SD input applied)
- Support for 16:9 letterbox, 4:3 center crop, and 4:3 anamorphic squeeze aspect ratio conversions
- HD to SD colour space conversion (ITU rec. 709 to ITU rec. 601)

Additional features on 7700R2X2-HES model only

- Integrated SoftSwitch™ technology for clean video and "popless" embedded audio switching
- Dolby-E® compliant
- VistaLINK® - capable for offering remote monitoring, control, and configuration via SNMP

Additional Features on the 7700R2x2-HD only

- TR101290 monitoring bitrate measurement and component matching test on all inputs
- Smart configuration of error threshold and switching rules to avoid false switching
- Complete TS data rate measurement with user settable measurement windows
- Essential TS Monitoring including:
  - TS Loss
  - Sync Byte Error
  - Bitrate Analysis
  - PIDs List Monitoring
  - Continuity Count
  - PAT Monitoring

Note: VistaLINK® is available when modules are used with the 3RU 7700FR-C frame and a 7700FC VistaLINK® Frame Controller module in slot 1 of the frame using the Model 9000NCP Network Control Panel or Evertz VistaLINK® PRO or other third-party SNMP manager software.

7700R2x2-HD

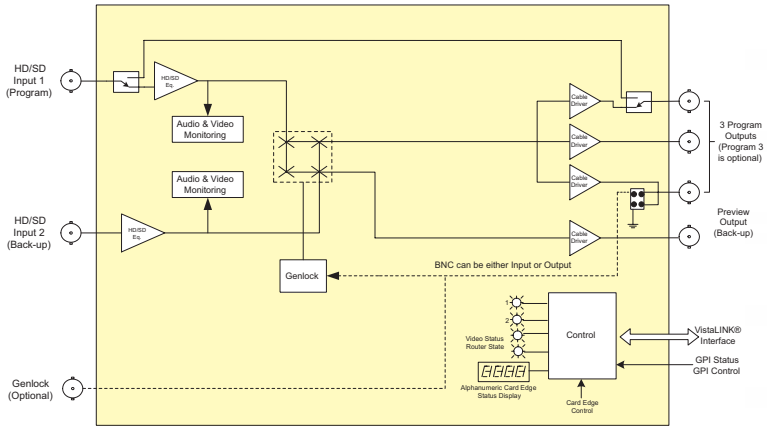

7700RD2x2-HD

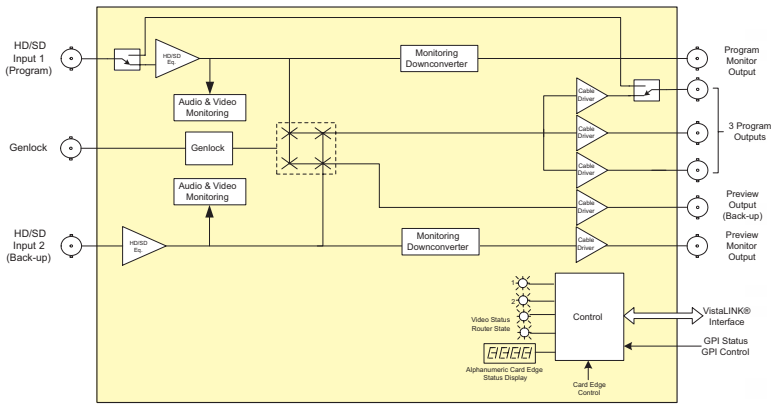

7700RD2x2-HES

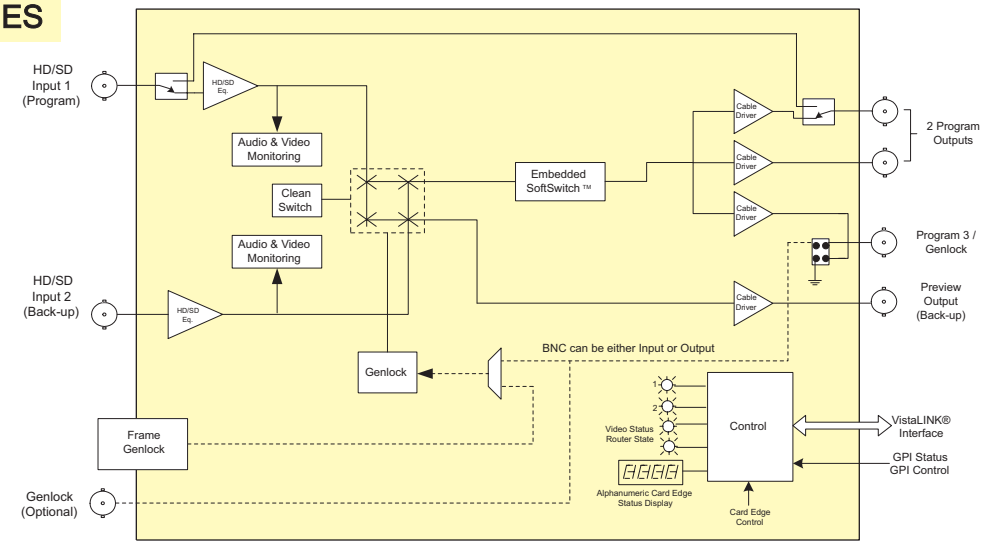

Specifications

Serial Video Input:

Standard:	Auto-detects standard 1.485Gb/sec SMPTE 292M (1080i/59.94, 1080i/50, 720p/59.94, 720p/50) SMPTE 260M, SMPTE 274M, SMPTE 296M, SMPTE 349M (HD or SD carrier) 270Mb/s SMPTE 259M-C (525i/59.94 or 625i/50)
Connector:	2 BNC per IEC 60169-8 Amendment 2
Input Equalization:	Automatic to 100m @ 1.5Gb/s with Belden 1694 or equivalent cable
Return Loss:	> 20dB up to 270MHz > 12dB up to 1.5GHz

Reclocked Serial Video Router Outputs:

Standard:	Same as input
Number of Outputs:	3 Program outputs reclocked, (1 output is bypass relay protected) 1 preview output
Connector:	BNC per IEC 60169-8 Amendment 2
Signal Level:	800mV nominal
DC Offset:	0V ±0.5V
Rise and Fall Time:	200ps nominal for HD 900ps nominal for SD
Overshoot::	< 10% of amplitude
Return Loss:	> 20dB up to 270MHz > 15dB at 1.5Gb/s
Jitter:	< 0.16 UI (HD) or < 0.10 UI (SD)

Downconverted Serial Video Outputs (7700RD2x2-HD only):

Standard:	SMPTE 259M-C, 270Mb/s
Number of Outputs:	1 Program 1 preview
Connector:	BNC per IEC 60169-8 Amendment 2
Signal Level:	800mV nominal
DC Offset:	0V ±0.5V
Rise and Fall Time:	750ps nominal
Overshoot:	< 10% of amplitude
Return Loss:	> 15dB at 270Mb/s
Jitter:	< 0.2 UI

Genlock Input:

Type:	NTSC or PAL Colour Black 1V p-p HD Tri-level Sync
Connector:	BNC per IEC 60169-8 Amendment 2
Termination:	High impedance or internal 75Ω (jumper selectable)

GPIO Control Port:

Number of Inputs:	2
Number of Outputs:	2
Type:	Opto-isolated, active low with internal pull-ups to +5 or +12V (jumper settable)
Connector:	6-pin removable terminal block
Signal Level:	Closure to ground

Input to Output Processing Delay (HD input video on (7700RD2x2-HD only):

Downconverter Video Delay:
Approximately 1 to 2 frames depending on input video format, processing mode

Electrical:

Voltage:	+12V DC
Power:	
7700R2x2-HD:	10W
7700R2x2-HES:	10W
7700RD2x2-HD:	14W
EMI/RFI:	Complies with FCC regulations for class A devices Complies with EU EMC directive

Physical:

Number of slots
7700 frame mounting:

7700R2x2-HD:	1
7700R2x2-HES:	1
7700RD2x2-HD:	2

7701 frame mounting:

All versions:	1

Ordering Information

7700R2x2-HD	2x2 HD/SD Modular Bypass Protection Router
7700R2x2-HES	2x2 HD/SD Modular Bypass Protection Router with SoftSwitch™
7700RD2x2-HD	2x2 HD/SD Modular Bypass Protection Router with dual HD Downconverter

Ordering Options Rear Plate must be specified at time of order
Eg: Model +3RU

Rear Plate Suffix

+3RU	3RU Rear Plate for use with 7700FR-C Multiframe
+1RU	1RU Rear Plate for use with 7701FR Multiframe
+SA	Standalone Enclosure Rear Plate

Enclosures

7700FR-C	3RU Multiframe which holds up to 15 single slot modules
7701FR	1RU Multiframe which holds up to 3 single or dual slot modules
S7701FR	Standalone Enclosure

7700R4X1-HD

HD/SD-SDI 4x1 Modular Router

The 7700R4x1-HD provides a convenient, low cost way to route high definition and standard definition serial digital signals. The 7700R4x1 can be used for 1.5Gb/s, 270Mb/s, 360Mb/s, 540Mb/s and DVB-ASI and 143Mb/s serial digital signals.

The module can also be used for SMPTE 310 (19.4Mb/s) signals with the internal reclocker turned off. The 7700R4x1-HD features auto-equalized inputs with two re-clocked outputs. The 7700R4x1-HD is housed in the Evertz 7700FR-C Multiframe which is available in a 3RU or a 1RU version.

Features & Benefits

- Hot-swappable, front-loading modular 4x1 routing
- Full support for SMPTE 292M (1.5Gb/s), SMPTE 259M (270, 360, 143Mb/s) and SMPTE 344M (540Mb/s)
- DVB-ASI compatible with all outputs maintaining polarity from input to output
- Non-reclocking mode for SMPTE 310M (19.4Mb/s)
- Features independant isolated outputs to ensure no cross-channel loading effects (no need to terminate unused outputs)
- VistaLINK® capable for remote monitoring, control and configuration via SNMP
- VistaLINK® is available when modules are used with the 3RU 7700FR-C and a 7700FC VistaLINK® Frame Controller module in slot 1 of the frame
- LEDs for signal presence and module health

Input
- SMPTE 292M (1.5Gb/s), SMPTE 259M (270Mb/s, 360Mb/s, 143Mb/s), SMPTE 344M (540Mb/s) and DVB-ASI
- SMPTE 310M (19.4Mb/s) - non-reclocking mode
- Return Loss > 15dB up to 1.5Gb/s
- Automatic cable equalization up to 100m at 1.5Gb/s

Output
- 2 re-clocked outputs
- Return loss > 15dB up to 1.5Gb/s
- Wideband jitter < 0.2 UI

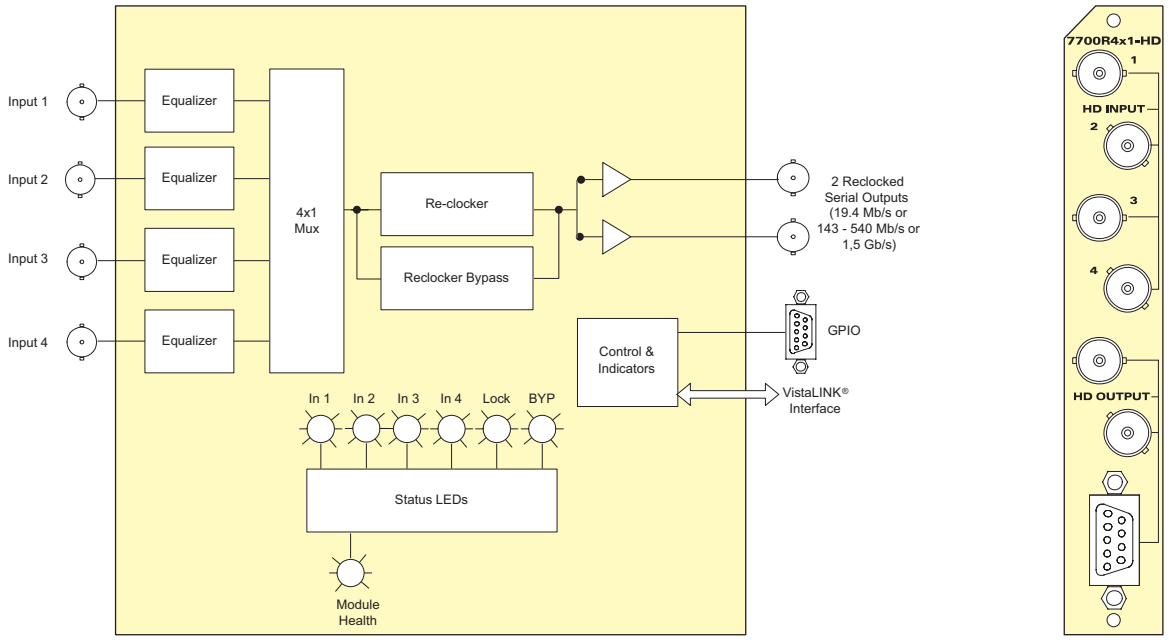

Specifications

Serial Video Input:

Standard:	SMPTE 292M, 259M, 344M, DVB-ASI
In Non-Reclock Mode:	SMPTE 310M
Number of Inputs:	4
Connector:	1 BNC per IEC 60169-8 Amendment 2
Equalization:	Automatic to 100m @ 1.5Gb/s with Belden 1694 (or equivalent)
Return Loss:	> 15dB to 1.5Gb/s
Wideband jitter:	< 0.2 UI

Serial Video Outputs:

Number of Outputs:	2
Standard:	SMPTE 292M, 259M, 344M, DVB-ASI
In Non-Reclock Mode:	SMPTE 310M
Signal Level:	800mV nominal
DC Offset:	0V ±0.5V
Rise and Fall Time:	200ps nominal
Overshoot:	< 10% of amplitude
Return Loss:	> 15dB to 1.5Gb/s
Wideband jitter:	< 0.2 UI

General Purpose Inputs/Outputs:

Number of Inputs:	4
Number of Outputs:	4
Type:	Opto-isolated, active low or high
GPI:	Internal pull-ups to +5 or +12V (jumper settable)
GPO:	Internal pull-ups to +3.3V
Connector:	Female High Density DB-15
Signal Level:	Closure to ground

Physical:

Number of Slots:	1

Electrical:

Voltage:	+12V DC
Power:	5W
EMI/RFI:	Complies with FCC Part 15, Class A EU EMC Directive

Ordering Information

700R4x1-HD	HD/SD-SDI 4x1 Modular Router
Ordering Options	Rear Plate must be specified at time of order Eg: Model + 3RU

Rear Plate Suffix

+3RU	3RU Rear Plate for use with 7700FR-C Multiframe
+1RU	1RU Rear Plate for use with 7701FR Multiframe
+SA	Standalone Enclosure Rear Plate

Enclosures

7700FR-C	3RU Multiframe which holds up to 15 single slot modules
7701FR	1RU Multiframe which holds up to 3 single or dual slot modules
S7701FR	Standalone enclosure

7700DA6-HD-L

HD/SD-SDI Reclocking Distribution Amplifier with Loop Thru

The 7700HD series Distribution Amplifiers provide reliable distribution of your 1.5Gb/s HDTV and 270Mb/s Standard Definition serial digital signal. The 7700DA6-HD-L features one auto-equalized input with passive loop thru which allows for cascading of multiple DA cards.

The 7700DA6-HD-L features an auto-equalized input with 6 reclocked outputs. The DA has been designed to reclock at 1.5Gb/s and 270Mb/s. In non-reclocking mode it can be used as a SMPTE 310M or SMPTE 259M/292M distribution product.

The 7700DA6-L occupies one card slot in the 3RU frame, which will hold up to 15 modules or the 1RU frame, which will hold up to three modules.

Features & Benefits

- Reclocking mode for SMPTE 292M (1.5Gb/s), SMPTE 259M (270Mb/s),
- DVB-ASI or HD/SD auto sensing
- Non-reclocking mode for SMPTE 310M (also SMPTE 259M, 292M)
- VistaLINK® capable offering remote monitoring, control and configuration capabilities via SNMP. VistaLINK® is available when modules are used with the 3RU 7700FR-C frame and a 7700FC
- VistaLINK® Frame Controller module in slot 1 of the frame

Status LEDs:
- Signal presence
- Module Health Status

Input::
- SMPTE 292M (1.5Gb/s) Reclocking mode
- SMPTE 259M (270Mb/s) DVB-ASI - Reclocking mode
- SMPTE 310M - Non-reclocking mode
- Auto equalization to 130m (Belden 1694A)

Output:
- 6 reclocked outputs
- 1 passive looping output
- Wideband jitter < 0.2 UI

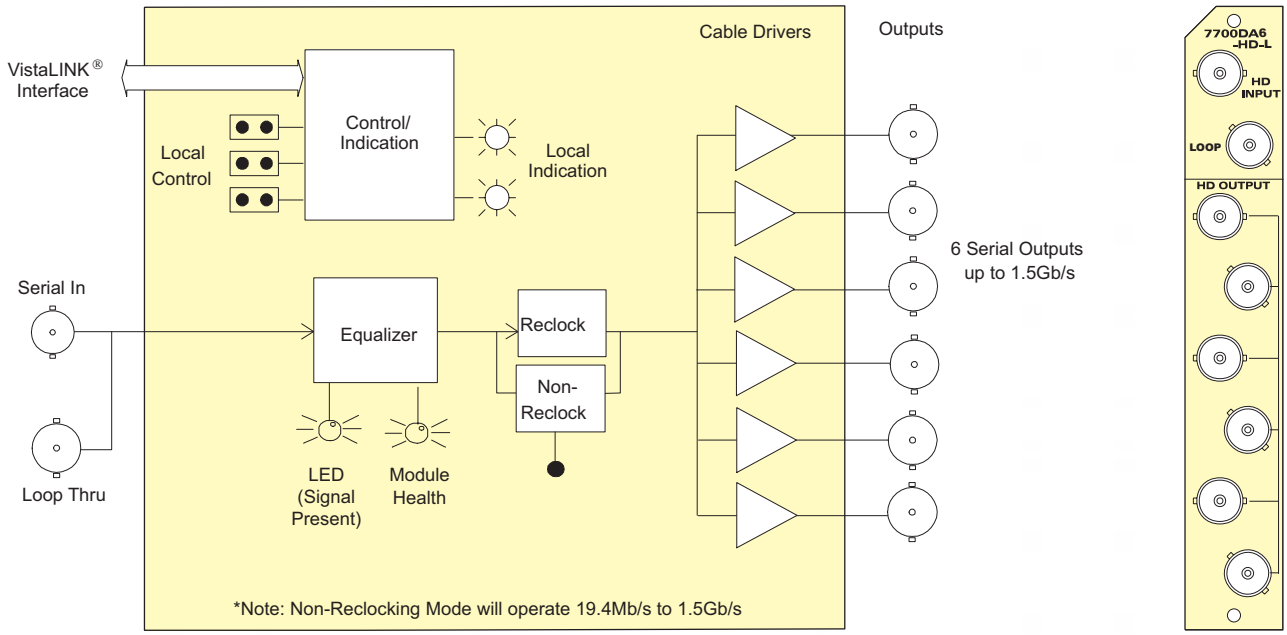

Specifications

Serial Video Input

Standard:	SMPTE 292M, SMPTE 259M-A, B, C, D, DVB-ASI or M2S
Non-Reclock Mode:	SMPTE 310M (also SMPTE 259M, 292M)
Connector:	1 BNC per IEC 60169-8
Amendment	2
Equalization:	Automatic to 130m @ 1.5Gb/s with Belden 1694A (or equivalent)
Return Loss:	> 15dB to 1.56Gb/s

Serial Video Outputs

Number of Outputs:	6 Per Card
Passive Loop Outputs:	1
Standard:	SMPTE 292M, SMPTE 259M-A, B, C, D, M2S, DVB-ASI
Non-Reclock Mode:	SMPTE 310M (also SMPTE 259M, 292M)
Signal Level:	800mV nominal
DC Offset:	0V ±0.5V
Rise and Fall Time:	200ps nominal
Overshoot:	< 10% of amplitude
Return Loss:	> 15dB to 1.56Gb/s
Wideband jitter:	< 0.2 UI

Physical

Number of Slots:	1

Electrical

Voltage:	+12V DC
Power:	5W
EMI/RFI:	Complies with FCC Part 15 Class A EU EMC Directive

Ordering Information

7700DA6-HD-L	HD/SD-SDI Reclocking Distribution Amplifier with Loop Thru
Ordering Options	Rear Plate must be specified at time of order Eg: Model +3RU

Rear Plate Suffix

+3RU	3RU Rear Plate for use with 7700FR-C Multiframe
+1RU	1RU Rear Plate for use with 7701FR Multiframe
+SA	Standalone Enclosure Rear Plate

Enclosures:

7700FR-C	3RU Multiframe which holds up to 15 single slot modules
7701FR	1RU Multiframe which holds up to 3 single or dual slot modules
S7701FR	Standalone enclosure

7700DA7-HD

HD/SD-SDI Reclocking Distribution Amplifier

The 7700 HD series Distribution Amplifiers provide reliable distribution of your 1.5Gb/s HDTV and 270Mb/s Standard Definition serial digital signal. The 7700DA7-HD features one auto-equalized input with seven reclocked outputs. It is housed in the Evertz 7700FR-C Multiframe, which is available in either a 3RU or 1RU version.

The DA has been designed to reclock at 1.5Gb/s and 270Mb/s. In non-reclocking mode it can be used as a SMPTE 310M or SMPTE 259M/292M distribution product.

Features & Benefits

- Reclocking mode for SMPTE 292M (1.5Gb/s), SMPTE 259M (270Mb/s), DVB-ASI auto sensing
- Non-reclocking mode for SMPTE 310M (also SMPTE 259M, 292M)
- VistaLINK® control

Status LEDs
- Signal presence
- Module Health Status

Input
- SMPTE 292M (1.5Gb/s) Reclocking mode
- SMPTE 259M (270Mb/s) DVB-ASI Reclocking mode
- SMPTE 310M - Non-reclocking mode
- Auto equalization to 100m (Belden 1694A)

Output
- 7 reclocked outputs
- Wideband jitter < 0.2 UI

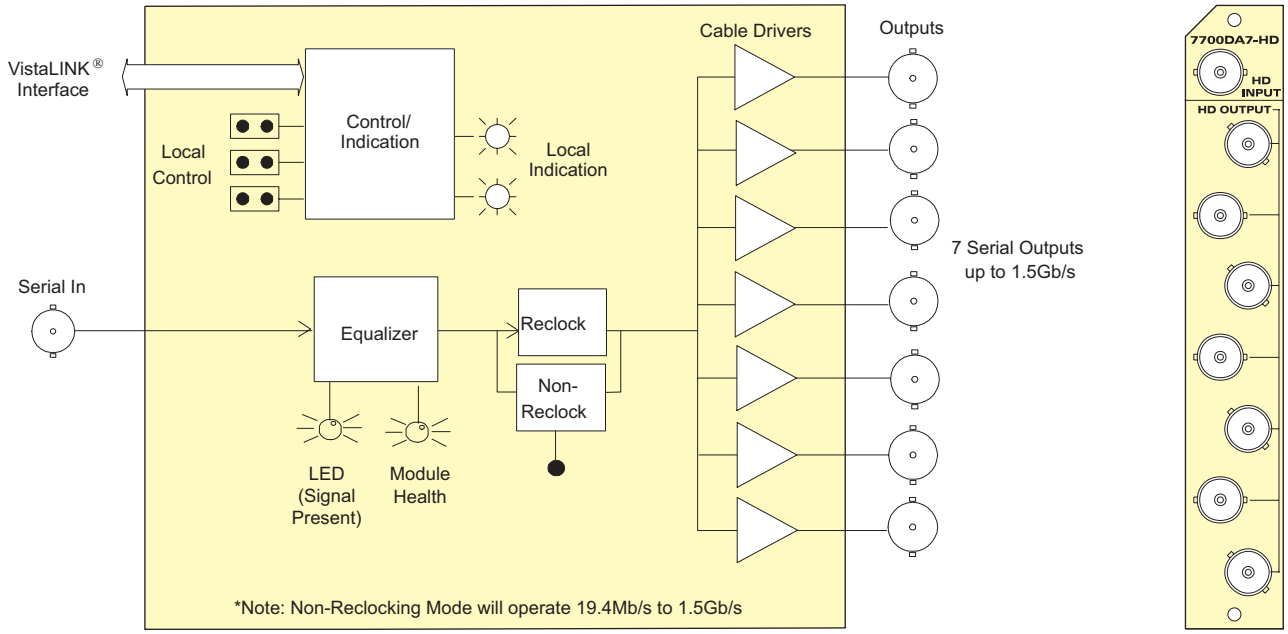

Specifications

Serial Video Input:

Standard:	SMPTE 292M, SMPTE 259M-A, B, C, D, DVB-ASI or M2S
In Non-Reclock Mode:	SMPTE 310M (also SMPTE 259M, 292M)
Connector:	1 BNC per IEC 60169-8 Amendment 2
Equalization:	Automatic to 100m @ 1.5Gb/s with Belden 1694A (or equivalent)
Return Loss:	> 15dB to 1.56Gb/s,

Serial Video Outputs:

Number of Outputs:	7 Per Card
Standard:	SMPTE 292M, SMPTE 259M-A, B, C, D M2S, DVB-ASI
In Non-Reclock Mode:	SMPTE 310M (also SMPTE 259M, 292M)
Signal Level:	800mV nominal
DC Offset:	0V ±0.5V
Rise and Fall Time:	200ps nominal
Overshoot:	< 10% of amplitude
Return Loss:	> 15dB to 1.56Gb/s
Wideband jitter:	< 0.2 UI

Physical:

Number of Slots:	1

Electrical:

Voltage:	+12V DC
Power:	5W
EMI/RFI:	Complies with FCC Part 15, Class A EU EMC Directive

Ordering Information

7700DA7-HD	HD/SD-SDI Reclocking Distribution Amplifier (1x7)
Ordering Options	Rear Plate must be specified at time of order Eg: Model +3RU

Rear Plate Suffix

+3RU	3RU Rear Plate for use with 7700FR-C Multiframe
+1RU	1RU Rear Plate for use with 7701FR Multiframe
+SA	Standalone Enclosure Rear Plate

Enclosures

7700FR-C	3RU Multiframe which holds up to 15 single slot modules
7701FR	1RU Multiframe which holds up to 3 single or dual slot modules
S7701FR	Standalone enclosure

The 7700 HD series Distribution Amplifiers provide reliable distribution of your 1.5Gb/s HDTV serial digital signal. The DAs feature one auto-equalized input with either four or eight reclocked outputs. The 7700 HD DAs are housed in the Evertz Multiframe, which is available in either a 3RU or 1RU version. The DA has been designed to reclock at 1.5Gb/s. In non-reclocking mode it can also be used as a SMPTE 292M, SMPTE 310M, DVB-ASI, M2S or SMPTE 259M distribution product.

Features & Benefits

- Reclocking mode for SMPTE 292M (1.5Gb/s) signals
- Non-reclocking mode for SMPTE 292M, SMPTE 310M DA (nominal 19.4Mb/s), SMPTE 259M, DVB-ASI or M2S
- Tally output upon loss of signal for quality monitoring

Status LEDs
- Signal presence
- Max. Equalization Warning
- Module Health Status

Input
- SMPTE 292M (1.5Gb/s) - Reclocking mode
- SMPTE 292M, SMPTE310M, SMPTE259M, M2S or DVB-ASI - Non-reclocking mode
- Auto equalization to 100m (Belden 1694A)

Output
- 4 or 8 reclocked outputs
- Wideband jitter < 0.2 UI

7700DA-HD

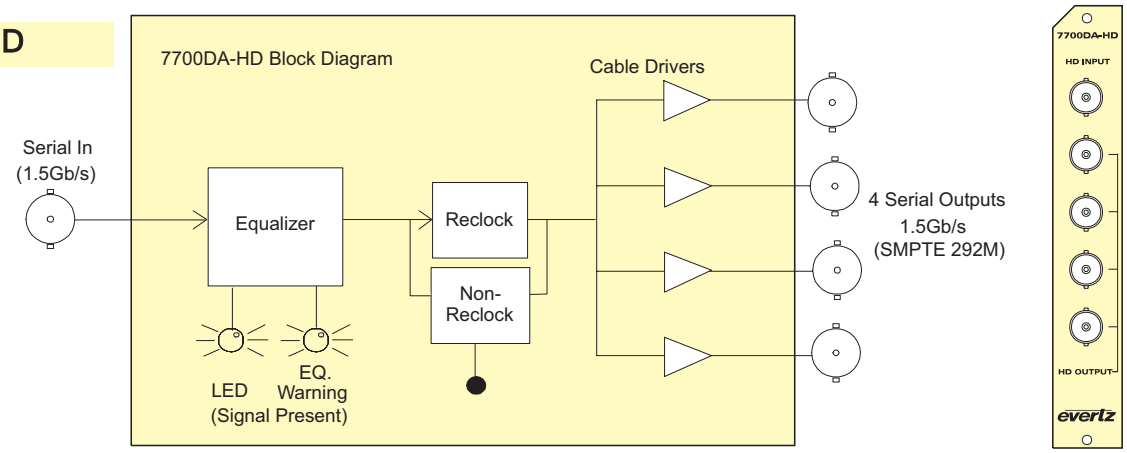

7700DA8-HD

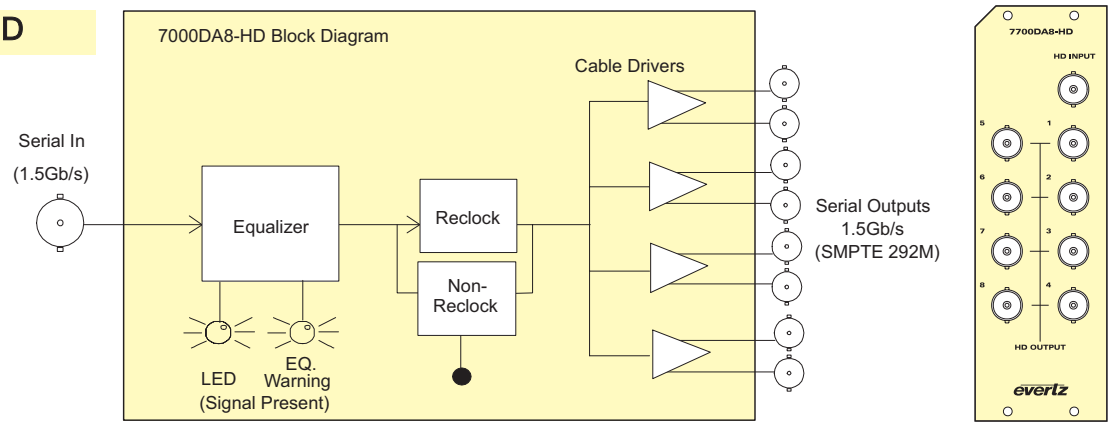

Specifications

Serial Video Input:

Standard:	SMPTE 292M
In Non-Reclock Mode:	SMPTE 292M, SMPTE 310M, SMPTE 259M-A, B, C, D, DVB-ASI or M2S
Connector:	BNC per IEC 60169-8 Amendment 2
Equalization:	Automatic to 100m @ 1.5Gb/s with Belden 1694A (or equivalent)
Return Loss:	> 15dB to 1.0Gb/s, > 12db up to 1.5Gb/s

Serial Video Outputs:

Number of Outputs:	4 or 8 per card
Standard:	SMPTE 292M
In Non-Reclock Mode:	SMPTE 292M, SMPTE 310M, SMPTE 259M-A, B, C, D, M2S, DVB-ASI
Connector:	BNC per IEC 60169-8 Amendment 2
Signal Level:	800mV nominal
DC Offset:	0V ±0.5V
Rise and Fall Time:	200ps nominal
Overshoot:	< 10% of amplitude
Return Loss:	> 15dB to 1.0Gb/s > 12db up to 1.5Gb/s
Wideband jitter:	< 0.2 UI

Physical:

Number of Slots:	1 (7700DA-HD) 2 (7700DA8-HD)

Electrical:

Voltage:	+12V DC
Power:	5W
EMI/RFI:	Complies with FCC Part 15, Class A EU EMC Directive

Ordering Information

7700DA-HD	HD-SDI reclocking DA (1x4)
7700DA8-HD	HD-SDI reclocking DA (1x8)

Ordering Options	Rear Plate must be specified at time of order Eg: Model +3RU
Rear Plate Suffix	
+3RU	3RU Rear Plate for use with 7700FR-C Multiframe
+1RU	1RU Rear Plate for use with 7701FR Multiframe
+SA	Standalone Enclosure Rear Plate

Enclosures

7700FR-C	3RU Multiframe which holds up to 15 single slot modules
7701FR	1RU Multiframe which holds up to 3 single or dual slot modules
S7701FR	Standalone enclosure

7700ACO-HD

HD/SD SDI, 8 Channel AES & RS232/RS422 Auto Changeover

The Evertz 7700ACO-HD HD/SDI Auto Changeover is designed to provide an HD/SD SDI video, multi channel AES audio and RS422/RS232 changeover in one device. The unit can be controlled via GPI, remotely via VistaLINK® PRO or set in auto changeover mode.

It is an all-in-one ACO package aimed towards protecting a complete channel (ie. protecting the video, 8 channels of discrete AES and associated control channel (RS232 or RS422). The unit features latching relays that maintain state through loss of power.

Features & Benefits

- Auto detection of signal standard
- Four modes of operation:
  - Auto changeover - two standalone auto changeovers
  - Manual DIP switch control - two independently controlled 2x1 switchers
  - GPI Control - two independently GPI controlled 2x1 switchers
  - Tally output provided
- Protection for 8 channels of AES
- Control channels
- Protection (on HD (1.5Gb/s) or SD (270Mb/s)
- Changeover conditions are based on signal presence of:
  - HD/SDI (TRS timing, CRC and EDH)
  - DVB-ASI (SMPTE sync word); Sync (H timing) and AES (sync word)
- VistaLINK® capable offering remote monitoring, control and configuration capabilities via SNMP
- VistaLINK® is available when modules are used with the 3RU 7700FR-C frame and a 7700FC VistaLINK® Frame Controller module in slot 1 of the frame

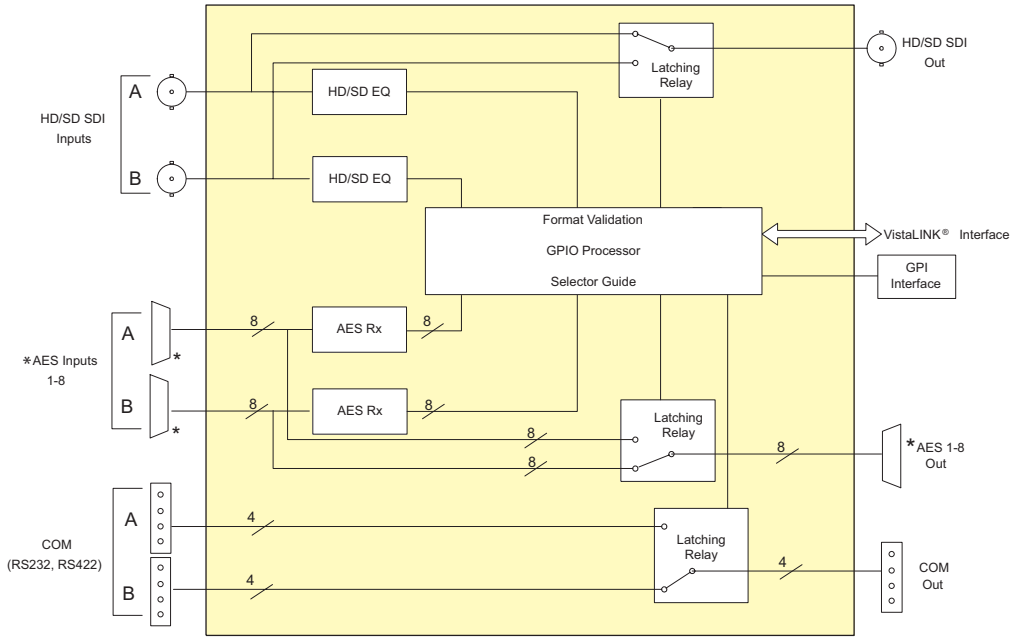

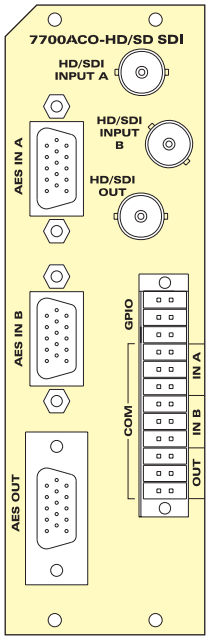

* DB15 to 8 channel unbalanced AES adapter provided

Specifications

Serial Video Inputs:

Standards:	SMPTE 292M (1.5Gb/s), SMPTE 259M-A, B, C, D (143 to 540Mb/s) or DVB-ASI
Connector:	2 BNC per IEC 60169-8 Amendment 2
Max Cable Length:	100m of Belden 1694AA or equivalent cable combined input and output
Return Loss:	10dB up to 1.5Gb/s

Serial Video Output:

Number of Outputs:	1 passive relay output
Connector:	BNC per IEC 60169-8 Amendment 2
Max Cable Length:	60m of Belden 1694AA or equivalent cable combined input and output
DC Offset:	0V ±0.5V
Return Loss:	10dB up to 1.5Gb/s

General Purpose Inputs and Outputs:

Type:	
Inputs:	Opto-isolated input with internal pull-up to +5V
Outputs:	Normally 10k internal pull-up to +5V. Ground to rear panel when relay is in active position.
Connector:	Screw down terminal blocks
Signal Level:	+5V nominal

Communications and Control:

Serial Port:	RS232/RS422 - 4 wire, terminal block
Connector:	4 pins on removable terminal block

AES Input:

Standard:	SMPTE 276M
Number of Inputs:	8 unbalanced AES
Connector:	Female High Density dB-15 (breakout cable to BNC provided)
Input Level:	1V p-p
Input Impedance:	75Ω
Return Loss:	> 25dB 100kHz to 600MHz
Equalization:	Automatic to 1500m with Belden 1694AA (or equivalent) @ 48kHz AES signal

AES Output:

Number of Outputs:	8 Unbalanced AES
Connector:	Female High Density dB-15 (breakout cable to BNC provided)
Output Level:	1V p-p
Output Impedance:	75Ω
Return Loss:	> 25dB 100kHz to 6MHz

Physical:

Number of slots:	2

Electrical:

Voltage:	+12V DC
Power:	6W
EMI/RFI:	Complies with FCC Part 15 Class A EU EMC Directive

Ordering Information

7700ACO-HD	HD/SD SDI, 8 Channel AES & RS232/422 Auto Changeover

Accessories

WPAES8-BNCM-6F	AES Audio Breakout Cable

Enclosures

7700FR-C	3RU Multiframe, which holds up to 15 single slot modules
7701FR	1RU Multiframe, which holds up to 3 single or dual slot modules
S7701FR	Standalone Enclosure

7700VMDA, 7700VMDA-2Q

SD-SDI Monitoring Reclocking Distribution Amplifier

The 7700VMDA Reclocking Distribution Amplifier provides inexpensive distribution and composite encoder monitoring of your SMPTE 259M (270MB/s) serial digital video signal. The 7700VMDA features an auto-equalized input with seven outputs that can be selected as either SDI or composite analog. The 7700VMDA-2Q has 2 channels, each with 3 selectable outputs, or it can be used as a single input DA with six outputs.

The 7700VMDA and 7700VMDA-2Q occupy one card slot each and can be housed in either a 1RU frame which will hold up to 3 modules, a 3RU frame which will hold up to 15 modules or a standalone enclosure which will hold 1 module.

Features & Benefits

- Features independent isolated output drivers to ensure no cross channel loading effects (i.e. no need to terminate unused outputs)
- VistaLINK® capable offering remote control and configuration capabilities via SNMP (using VistaLINK® PRO, 9000NCP or 9000NCP2 Network Control Panel) is available when modules are used with the 3RU 7700FR-C frame and a 7700FC VistaLINK® Frame Controller

Input
- Supports SMPTE 259M-C (270Mb/s) video with embedded audio
- Return loss > 15dB up to 540Mb/s
- 300m auto equalization at 270Mb/s (Belden 8281)

Outputs
- Selectable reclocked/composite encoder outputs
- Return loss > 15dB up to 540Mb/s
- Wideband jitter < 0.2 UI
- Passes embedded audio to SDI output

Card Edge LEDs
- Signal presence
- Module Health Status

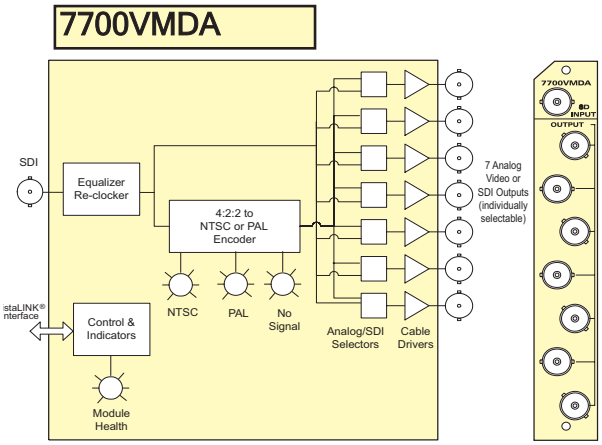

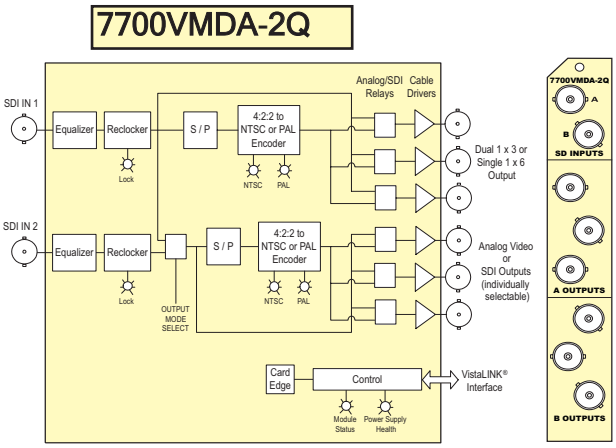

Specifications

Serial Video Input:

Standard:	SMPTE 259M
Connector:	BNC per IEC 60169-8 Amendment 2
Equalization:	Automatic to 300m @ 270Mb/s with Belden 8281 (or equivalent)
Return Loss:	> 15dB up to 540Mb/s
Embedded Audio:	SMPTE 272M-A

Serial Video Output:

Number of Outputs:	Up to 7 (jumper selectable) (7700VMDA) 3 per channel (7700VMDA-2Q)
Connector:	BNC per IEC 60169-8 Amendment 2
Signal Level:	800mV nominal
DC Offset:	0V ±0.5V
Rise and Fall Time:	740ps nominal
Overshoot:	< 10% of amplitude
Return Loss:	> 15dB up to 540Mb/s
Wideband Jitter:	< 0.2 UI

Analog Video Output:

Number of Outputs:	Up to 7 (jumper selectable) (7700VMDA) 3 per channel (7700VMDA-2Q)
Standards:	NTSC, SMPTE 170M if input is 525i/59.94 PAL-B ITU 624-4 if input is 625i/50
Connectors:	BNC per IEC 60169-8 Amendment 2
Signal Level:	1V p-p nominal
DC Offset:	0V ±0.1V
Return Loss:	> 35dB up to 5MHz

Physical:

Number of Slots:	1

Electrical:

Voltage:	+12V DC
Power:	6W
EMI/RFI:	Complies with FCC Part 15, Class A EU EMC Directive

Ordering Information

7700VMDA	Video Monitoring Reclocking DA, 1 channel, 7 outputs
7700VMDA-2Q	Video Monitoring Reclocking DA, 2 channels, 3 outputs per channel

Ordering Options Rear Plate must be specified at time of order
Eg: Model +3RU

Rear Plate Suffix

+3RU	3RU Rear Plate for use with 7700FR-C Multiframe
+1RU	1RU Rear Plate for use with 7701FR Multiframe
+SA	Standalone Enclosure Rear Plate

Enclosures

7700FR-C	3RU Multiframe which holds up to 15 single slot modules
7701FR	1RU Multiframe which holds up to 3 single or dual slot modules
S7701FR	Standalone enclosure

7700DA-DS3

DS3 Distribution Amplifier

The 7700DA-DS3 Distribution Amplifier provides automatic coaxial cable equalization, reclocking and signal distribution of DS3 (44.736Mb/s), signals. The 7700DA-DS3 accepts a B3ZS-encoded Alternate Mark Inversion (AMI) input signal and provides four reclocked outputs.

The 7700DA-DS3 occupies one card slot and can be housed in either a 1RU frame that will hold up to three modules or a 3RU frame that will hold up to 15 modules.

Features & Benefits

- Supports DS3 (44.736Mb/s)
- Accepts B3ZS-encoded AMI input signals
- Automatic cable equalization for up to 1000ft of high quality 75Ω cable
- Signal reclocking and optional jitter attenuator
- Output wave shaping for DS3 standards compliance
- High/Low output amplitude setting for long/short cable lengths
- Loss of signal (LOS) detection/indication
- Outputs 1's pattern generation upon loss of input signal
- Electrical output drive level control for enhanced distance
- Transformer coupled inputs/outputs
- Input/output transient protection

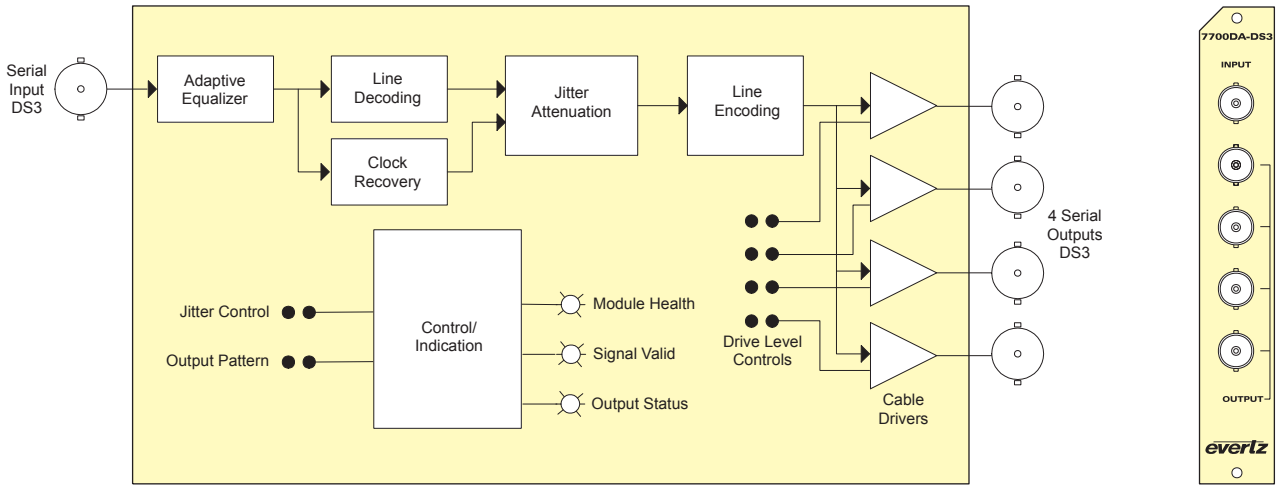

Specifications

Inputs:

Standard:	DS3 (44.7346Mb/s)
Number of Inputs:	1
Connector:	Isolated BNC per IEC 60169-8 Amendment 2
Equalization:	Automatic to 300m with Belden 8281 or equivalent cable
Return Loss:	>20dB up to 44Mb/s

Outputs:

Number of Outputs:	4 per card reclocked
Connector:	BNC per IEC 60169-8 Amendment 2
Waveform:	Conforms to G.703 compliant masks
Return Loss:	> 18dB up to 44Mb/s

Physical:

Number of Slots:	1

Electrical:

Voltage:	+12V DC
Power:	6W
EMI/RFI:	Complies with FCC Part 15, Class A Complies with EU EMC Directive

Ordering Information:

7700DA-DS3	DS3 Distribution Amplifier
Ordering Options	Rear Plate must be specified at time of order Eg: Model +3RU

Rear Plate Suffix

+3RU	3RU Rear Plate for use with 7700FR-C Multiframe
+1RU	1RU Rear Plate for use with 7701FR Multiframe
+SA	Standalone Enclosure Rear Plate

Enclosures

7700FR-C	3RU Multiframe which holds up to 15 single slot modules
7701FR	1RU Multiframe which holds up to 3 single or dual slot modules
S7701FR	Standalone enclosure

The 7700DA-E3 Distribution Amplifier provides automatic coaxial cable equalization, reclocking and signal distribution of DS3 (34.368Mb/s) signals. The 7700DA-E3 accepts a HDB3 encoded Alternate Mark Inversion (AMI) input signal and provides four reclocked outputs.

The 7700DA-E3 occupies one card slot and can be housed in either a 1RU frame that will hold up to 3 modules or a 3RU frame that will hold up to 15 modules.

Features & Benefits

- Supports E3 (34.368Mb/s)
- Accepts HDB3 AMI input signals
- Adaptive cable Equalization for up to 300m of high quality 75O cable
- Signal reclocking and optional jitter attenuator
- Output wave shaping for E3 standards compliance
- Loss of signal (LOS) detection/indication
- Outputs 1s pattern generation upon loss of input signal

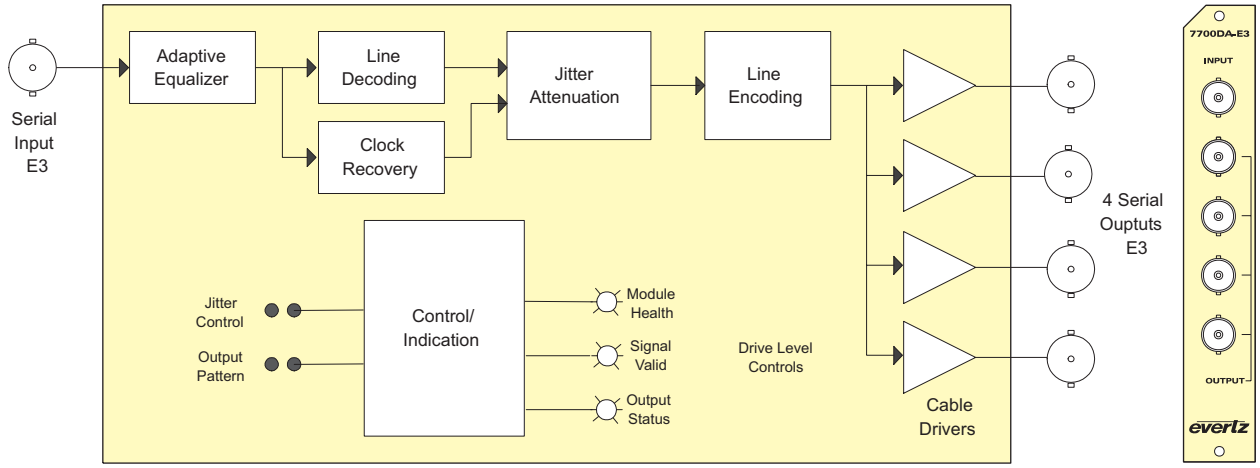

Specifications

Input:

Standard:	E3 (34.368Mb/s HDB3)
Number of Inputs:	1
Connector:	Isolated BNC per IEC 60169-8 Amendment 2
Equalization:	Automatic to 300m with Belden 8281 or equivalent cable
Return Loss:	> 20dB up to 34Mb/s

Outputs:

Number of Outputs:	4 reclocked
Connector:	BNC per IEC 60169-8 Amendment 2
Waveform:	Conforms to G.703 compliant masks
Return Loss:	> 18dB up to 34Mb/s

Electrical:

Voltage:	+12V DC
Safety:	ETL Listed, complies with EU low voltage directive
Power:	6W
EMI/RFI:	Complies with FCC Part 15, Class A EU EMC Directive

Physical:

Number of Slots:	1

Ordering Information

7700DA-E3	E3 Distribution Amplifier
Ordering Options	Rear plate must be specified at time of order Eg: Model +3RU

Rear Plate Suffix

+3RU	3RU Rear Plate for use with 7700FR-C Multiframe
+1RU	1RU Rear Plate for use with 7701FR Multiframe
+SA	Standalone Enclosure Rear Plate

Enclosures

7700FR-C	3RU Multiframe, which holds up to 15 single slot modules
7701FR	1RU Multiframe, which holds up to 3 single or dual slot modules
S7701FR	Standalone Enclosure

7700DA , 7700DA-N

143-540Mb/s, DVB-ASI, SMPTE 310M, M2S Reclocking Distribution Amplifier

The Evertz 7700 series Distribution Amplifiers provide inexpensive distribution of your serial digital video signal at rates of 19.4Mb/s and 143Mb/s to 540Mb/s. The 7700DA features an auto-equalized input with four reclocked outputs. The 7700DA-N offers an auto-equalized input with four non-reclocked outputs.

They both have been designed for use as a SMPTE 310M (19.4Mb/s), DVB-ASI, M2S or SMPTE 259M distribution product. SMPTE 310M support is selected by setting a rate select jumper (for 7700DA only).

Features & Benefits

- Mode to run SMPTE 310M DA (nominal 19.4Mb/s with reclocking)
- Supports up to 540Mb/s operation
- DVB-ASI compatible
- Tally output upon loss of signal for quality monitoring
- Features independent isolated output drivers to ensure no cross channel loading effects (i.e. no need to terminate unused outputs)

Input
- SMPTE 259M (143Mb/s to 540Mb/s), DVB-ASI, M2S, SMPTE 310M (19.4Mb/s)
- Return loss > 15dB up to 540Mb/s
- 300m auto equalization at 270Mb/s (Belden 8281)
- 210m auto equalization at 540Mb/s (Belden 8281)

Outputs
- 4 reclocked outputs (7700DA)
- 4 non-reclocked outputs (7700DA-N)
- Return loss > 15dB up to 540Mb/s
- Wideband jitter < 0.2 UI

Card Edge LEDs
- Signal presence
- Max. Equalization Warning
- Module Health Status

7700DA

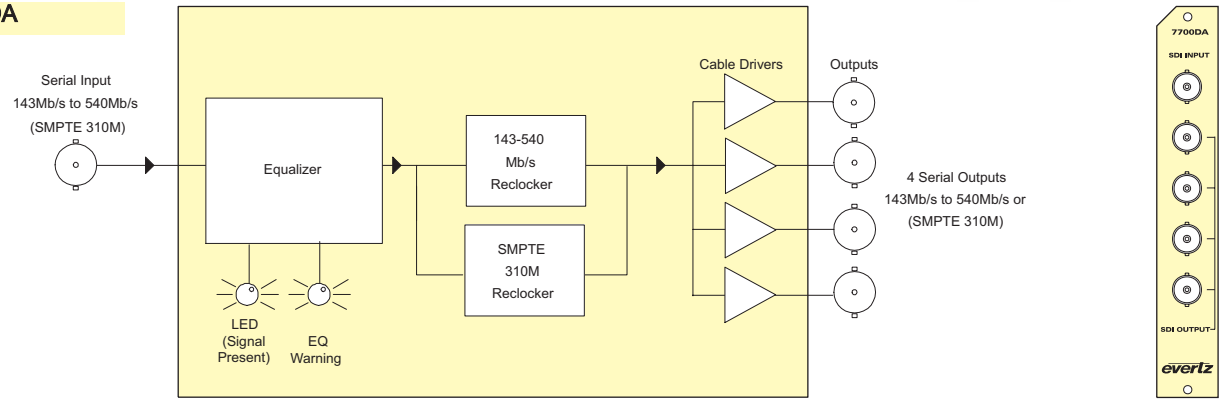

7700DA-N

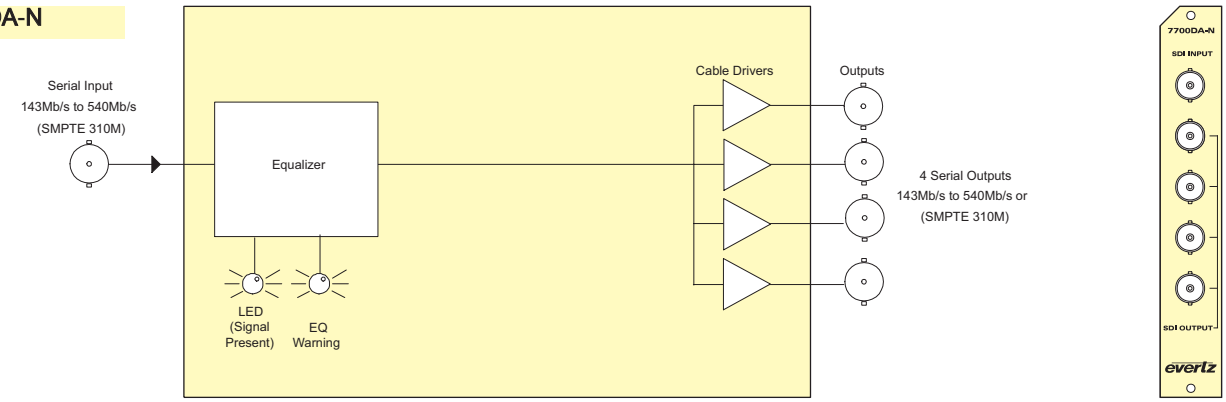

Specifications

Serial Video Input:

Standard:	SMPTE 259M A, B, C, D, DVB-ASI, M2S, SMPTE 310M (19.4Mb/s -jumper selected)
Connector:	BNC per IEC 60169-8 Amendment 2
Equalization:	Automatic to 300m @ 270Mb/s with Belden 8281 (or equivalent)
Return Loss:	> 15dB up to 540Mb/s

Serial Video Output:

Number of Outputs:	4 per card reclocked (7700DA) 4 per card non-reclocked (7700DA-N)
Connector:	BNC per IEC 60169-8 Amendment 2
Signal Level:	800mV nominal
DC Offset:	0V ±0.5V
Rise and Fall Time:	740ps nominal
Overshoot:	< 10% of amplitude
Return Loss:	> 15dB up to 540Mb/s
Wideband Jitter:	< 0.2 UI

Physical:

Number of Slots:	1

Electrical:

Voltage:	+12V DC
Power:	6W
EMI/RFI:	Complies with FCC Part 15, Class A EU EMC Directive

Ordering Information

7700DA	143-540Mb/s, DVB-ASI, SMPTE 310M, M2S Reclocking Distribution Amplifier (with 4 outputs)
7700DA-N	143-540Mb/s, DVB-ASI, SMPTE 310M, M2S Non-reclocking Distribution Amplifier (with 4 outputs)

Ordering Options Rear Plate must be specified at time of order
Eg: Model +3RU

Rear Plate Suffix

+3RU	3RU Rear Plate for use with 7700FR-C Multiframe
+1RU	1RU Rear Plate for use with 7701FR Multiframe
+SA	Standalone Enclosure Rear Plate

Enclosures

7700FR-C	3RU Multiframe which holds up to 15 single slot modules
7701FR	1RU Multiframe which holds up to 3 single or dual slot modules
S7701FR	Standalone enclosure

7700DA6-L

SD-SDI Reclocking Distribution Amplifier with Loop Thru

The 700DA6-L is an inexpensive 1x6 SD-SDI Distribution Amplifier with passive loop thru which allows for cascading of multiple DA cards. It amplifies serial digital video signal at rates of 19.4 Mb/s and 143 Mb/s to 540 Mb/s.

The 7700DA6-L features an auto-equalized input with 6 reclocked outputs. The 7700DA6-L has been designed for use as a SMPTE 310M (19.4 Mb/s), DVB-ASI, M2S or SMPTE 259M distribution product. SMPTE 310M support is selected by setting a rate select jumper.

The 7700DA6-L occupies one card slot in the 3RU frame, which will hold up to 15 modules or the 1RU frame, which will hold up to three modules.

Features & Benefits

- Supports up to 540Mb/s operation
- DVB-ASI compatible
- Non reclocking mode for SMPTE 310M
- Features independent isolated output drivers to ensure no cross channel loading effects (i.e. no need to terminate unused outputs)
- VistaLINK® - capable offering remote monitoring, control and configuration capabilities via SNMP. VistaLINK® is available when modules are used with the 3RU 7700FR-C frame and a 7700FC
- VistaLINK® Frame Controller module in slot 1 of the frame
- Return loss > 15dB up to 540Mb/s
- 300m auto eq. at 270Mb/s (Belden 8281)
- 210m auto eq. at 540Mb/s (Belden 8281)

Outputs:
- 6 reclocked outputs
- 1 passive looping output
- Return loss > 15dB up to 540Mb/s
- Wideband jitter < 0.2 UI

Card Edge LEDs:
- Signal presence
- Module Health Status

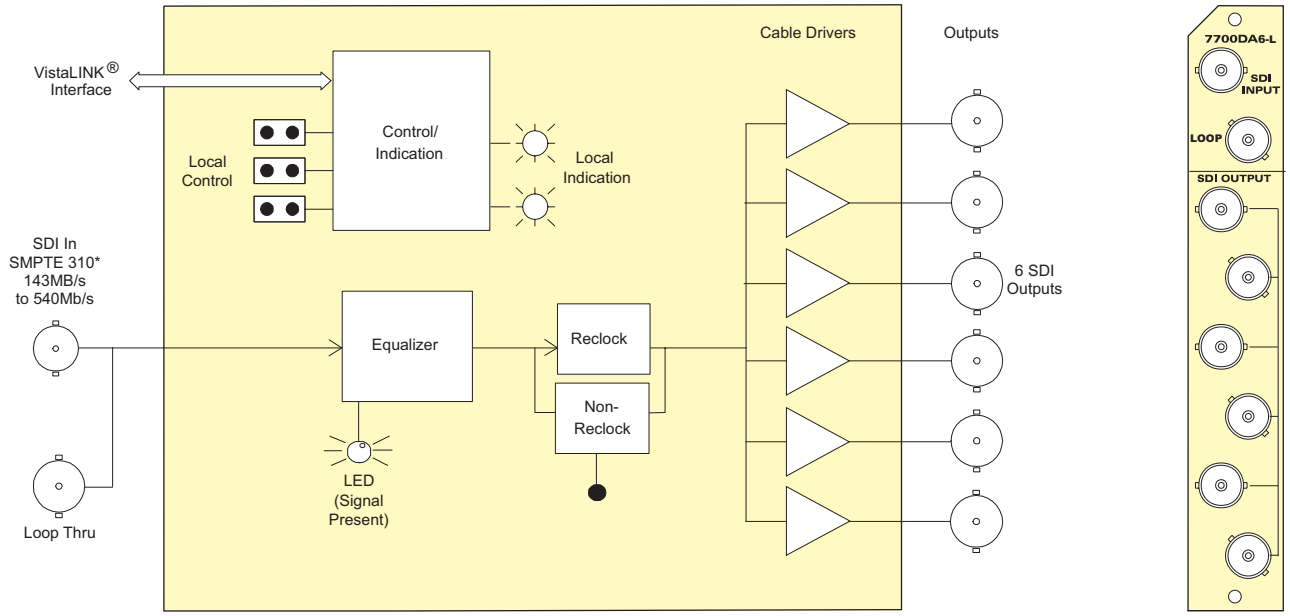

*Note: Non-Reclocking Mode will operate 19.4Mb/s to 540Mb/s

Specifications

Serial Video Input:

Standard:	SMPTE 259M A, B, C, D, DVB-ASI, M2S, SMPTE 310M (19.4Mb/s jumper selected)
Connector:	BNC per IEC 60169-8 Amendment 2
Equalization:	Automatic to 300m @ 270Mb/s with Belden 8281 (or equivalent)
Return Loss:	> 15dB up to 540Mb/s

Serial Video Output:

Reclocked Outputs:	6
Passive Looping Outputs:	1
Connector:	BNC per IEC 60169-8 Amendment 2
Signal Level:	800mV nominal
DC Offset:	0V ± 0.5V
Rise and Fall Time:	740ps nominal
Overshoot:	<10% of amplitude
Return Loss:	>15 dB up to 540Mb/s
Wideband Jitter:	<0.2 UI

Physical:

Number of Slots:	1

Electrical:

Voltage:	+12VDC
Power:	6 Watts
EMI/RFI:	Complies with FCC Part 15 Class A EU EMC Directive

Ordering Information:

7700DA6-L	SD-SDI Reclocking Distribution Amplifier with Loop Thru
Ordering Options	Rear plate must be specified at time of order Eg: Model +3RU

Rear Plate Suffix

+3RU	3RU Rear Plate for use with 7700FR-C Multiframe
+1RU	1RU Rear Plate for use with 7701FR Multiframe
+SA	Standalone Enclosure Rear Plate

Enclosures:

7700FR-C	3RU Multiframe which holds up to 15 single slot modules
7701FR	1RU Multiframe which holds up to 3 single or dual slot modules
S7701FR	Standalone enclosure

7700DA7

143-540Mb/s, DVB-ASI & SMPTE 310M Reclocking Distribution Amplifier

The 7700 series Distribution Amplifier provides inexpensive distribution of your serial digital video signal at rates of 19.4Mb/s and 143Mb/s to 540Mb/s. The 7700DA7 features an auto-equalized input with seven reclocked outputs.

It has been designed for use as a SMPTE 310M (19.4Mb/s), DVB-ASI, M2S or SMPTE 259M distribution product. SMPTE 310M support is selected by setting a rate select jumper.

Features & Benefits

- Supports up to 540Mb/s operation
- DVB-ASI compatible
- Non-reclocking mode for SMPTE 310M
- Features independent isolated output drivers to ensure no cross channel loading effects (i.e. no need to terminate unused outputs)
- VistaLINK® capable offering remote monitoring, control and configuration capabilities via SNMP
- VistaLINK® is available when modules are used with the 3RU 7700FR-C frame and a 7700FC VistaLINK® Frame Controller module in slot 1 of the frame

Input
- SMPTE 259M (143Mb/s to 540Mb/s), DVB-ASI, M2S, SMPTE 310M (19.4Mb/s) - Non-reclocking mode
- Return loss > 15dB up to 540Mb/s
- 300m auto equalization at 270Mb/s (Belden 8281)
- 210m auto equalization at 540Mb/s (Belden 8281)

Outputs
- 7 reclocked outputs
- Return loss > 15dB up to 540Mb/s
- Wideband jitter < 0.2 UI

Card Edge LEDs
- Signal presence
- Module Health Status

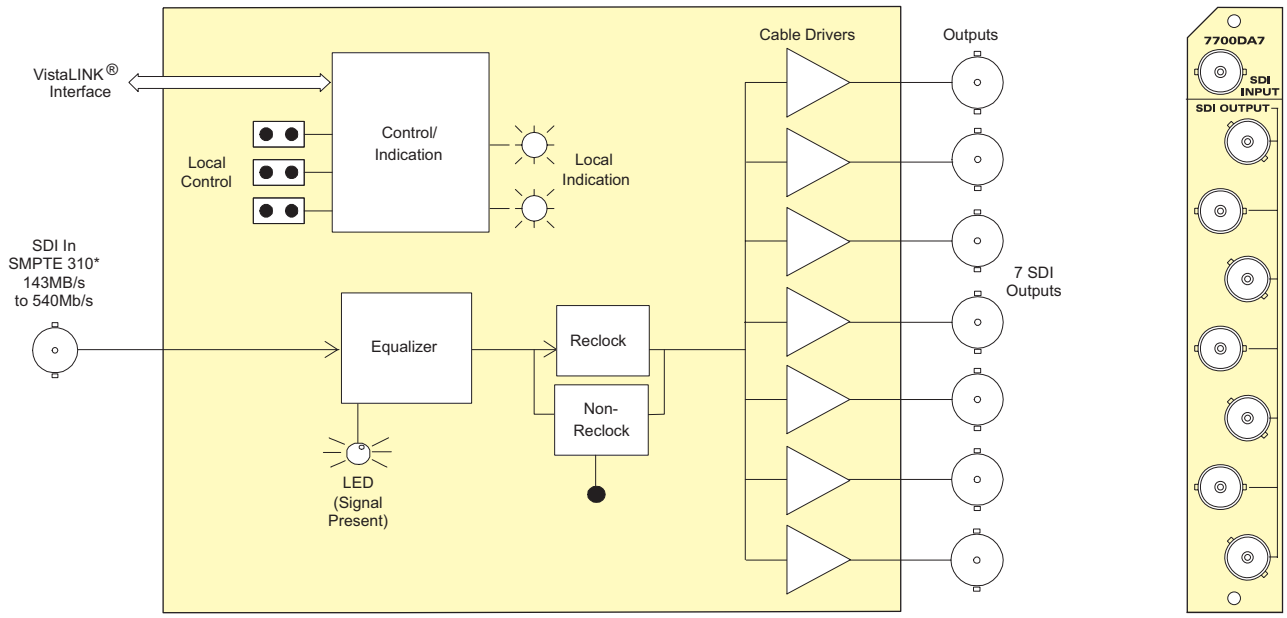

*Note: Non-Reclocking Mode will operate 19.4Mb/s to 540Mb/s

Specifications

Serial Video Input:

Standard:	SMPTE 259M A, B, C, D, DVB-ASI, M2S, SMPTE 310M (19.4Mb/s -jumper selected)
Connector:	BNC per IEC 60169-8 Amendment 2
Equalization:	Automatic to 300m @ 270Mb/s with Belden 8281 (or equivalent)
Return Loss:	> 15dB up to 540Mb/s

Serial Video Output:

Number of Outputs:	7
Connector:	BNC per IEC 60169-8 Amendment 2
Signal Level:	800mV nominal
DC Offset:	0V ±0.5V
Rise and Fall Time:	740ps nominal
Overshoot:	< 10% of amplitude
Return Loss:	> 15dB up to 540Mb/s
Wideband Jitter:	< 0.2 UI

Physical:

Number of Slots:	1

Electrical:

Voltage:	+12V DC
Power:	6W
EMI/RFI:	Complies with FCC Part 15, Class A EU EMC Directive

Ordering Information

7700DA	7143-540Mb/s, DVB-ASI, SMPTE 310M, M2S Reclocking Distribution Amplifier (1x7)

Ordering Options Rear Plate must be specified at time of order
Eg: Model +3RU

Rear Plate Suffix

+3RU	3RU Rear Plate for use with 7700FR-C Multiframe
+1RU	1RU Rear Plate for use with 7701FR Multiframe
+SA	Standalone Enclosure Rear Plate

Enclosures

7700FR-C	3RU Multiframe which holds up to 15 single slot modules
7701FR	1RU Multiframe which holds up to 3 single or dual slot modules
S7701FR	Standalone enclosure

The 7700DA-AESU is a five output reclocking and auto equalizing DA for 75Ω unbalanced AES signals. The DA will automatically equalize AES signals on Belden 1694AA coax to 1500m. The DA will reclock data with sampling frequencies of 32kHz, 44.1kHz, 48kHz and 96kHz.

The 7700DA-AESU card edge LED indicators provide quick and accurate assessment of the incoming signal integrity. The 7700DA-AESU also provides a contact closure output that can be configured using on-board jumpers to assert when an input error condition exists.

Features & Benefits

- SMPTE 276M standard for AES audio on 75Ω coax
- Transformer coupled 75Ω unbalanced input (selectable Hi-Z)
- Data reclocking provides jitter reduction
- Automatic equalization
- EQ and reclock provide extended cable length compensation (> 1500m)
- Five 75Ω coax outputs
- Error LED indication for input PLL out of lock, parity error or biphase coding error
- External indication of input error condition using contact closure output

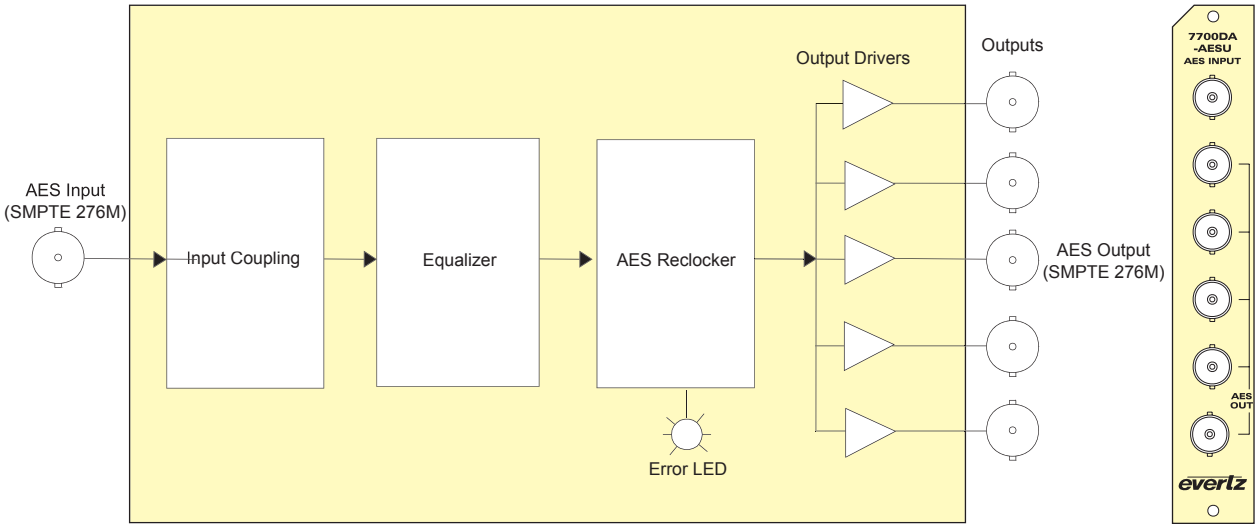

Specifications

AES Input:

Standard:	SMPTE 276M
Number of Inputs:	1
Connector:	BNC per IEC 60169-8 Amendment 2
Input Level:	1V p-p
Coupling:	Transformer
Input Impedance:	75Ω (Selectable Hi-Z)
Return Loss:	> 25dB at 100kHz to 6MHz
Equalization:	Automatic to 1500m with Belden 1694A (or equivalent) @ 48kHz AES signal
Sampling Frequency:	32kHz, 44.1kHz, 48kHz and 96kHz

AES Output:

Number of Outputs:	5 per card reclocked
Connector:	BNC per IEC 60169-8 Amendment 2
Output Level:	1V p-p
Output Impedance:	75Ω
Return Loss:	> 25dB 100kHz to 6MHz

Physical:

Number of Slots:	1

Electrical:

Voltage:	+12V DC
Power:	1.2W
EMI/RFI:	Complies with FCC Part 15, Class A EU EMC Directive

Ordering Information

7700DA-AESU	Auto Equalizing Unbalanced AES/EBU Distribution Amplifier (1X5)
Ordering Options	Rear Plate must be specified at time of order Eg: Model +3RU

Rear Plate Suffix

+3RU	3RU Rear Plate for use with 7700FR-C Multiframe
+1RU	1RU Rear Plate for use with 7701FR Multiframe
+SA	Standalone Enclosure Rear Plate

Enclosures

7700FR-C	3RU Multiframe which holds up to 15 single slot modules
7701FR	1RU Multiframe which holds up to 3 single or dual slot modules
S7701FR	Standalone enclosure

7700DA-AESB

Auto Equalizing Balanced AES/EBU Distribution Amplifier

The 7700DA-AESB is a five output DA with auto equalizing input and reclocking for 110Ω balanced AES signals. The DA will automatically equalize AES signals on Belden 1800B cable when the drive signal is 7V p-p. The DA will reclock data with sampling frequencies of 32kHz, 44.1kHz, 48kHz and 96kHz.

The 7700DA-AESB card edge LED indicators provide quick and accurate assessment of the incoming signal integrity. The 7700DA-AESB also provides a contact closure output that can be configured using on-board jumpers to assert when an input error condition exists.

Features & Benefits

- AES3-1992 standard for AES audio on 110Ω twisted pair cable
- Transformer coupled 110Ω balanced input (selectable Hi-Z)
- Data reclocking provides jitter reduction
- Automatic equalization
- EQ and reclock provide extended cable length compensation
- Five 110Ω balanced outputs
- Error LED indication for input PLL out of lock, parity error or biphase coding error
- External indication of input error condition using contact closure output

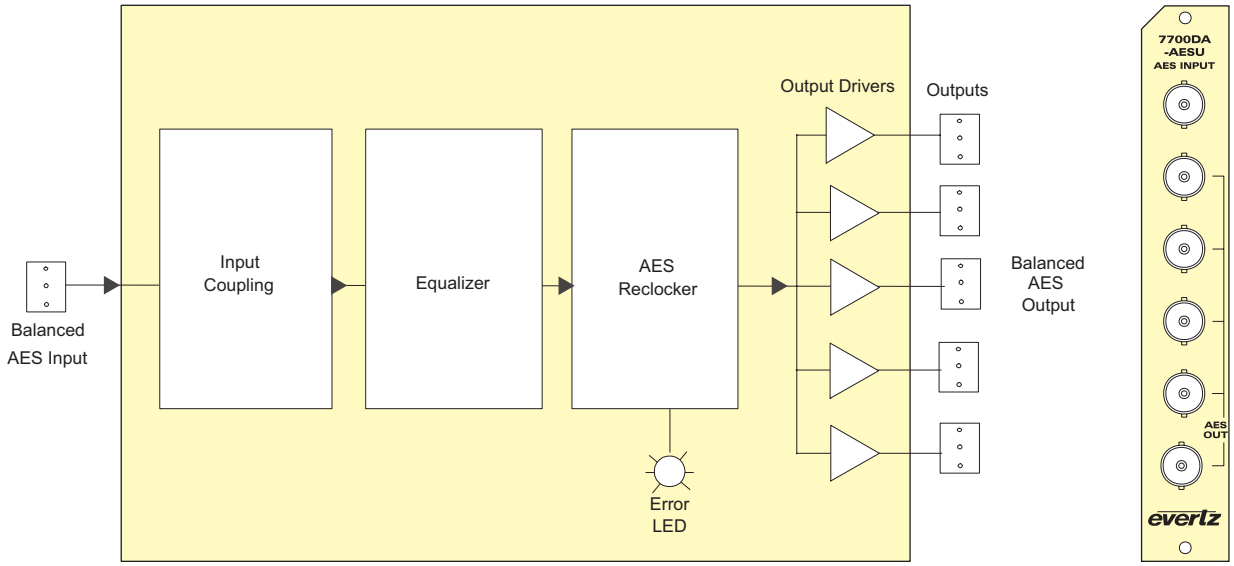

Specifications

AES Input:

Standard:	AES3-1992
Connector:	3-pin removable terminal strip
Number of inputs:	1
Input Level:	2 to 7V p-p
Coupling:	Transformer
Input Impedance:	110Ω (selectable Hi-Z)
Return Loss:	> 14dB 100kHz to 6MHz
Equalization:	Automatic to 300m with Belden 1800B (or equivalent) @ 48kHz AES signal
Sampling Frequency:	32kHz, 44.1kHz, 48kHz and 96kHz

AES Output:

Number of Outputs:	5 per card Reclocked
Connector:	3-pin removable terminal strip
Output Level:	5V p-p
Output Impedance:	110Ω
Return Loss:	30dB 100kHz to 6MHz

Electrical:

Voltage:	+12V DC
Power:	1.8W
EMI/RFI:	Complies with FCC Part 15, Class A EU EMC Directive

Physical:

Number of Slots:	1

Ordering Information

7700DA-AESB	Auto Equalizing Balanced AES/EBU Distribution Amplifier
Ordering Options	Rear Plate must be specified at time of order Eg: Model +3RU

Rear Plate Suffix

+3RU	3RU Rear Plate for use with 7700FR-C Multiframe
+1RU	1RU Rear Plate for use with 7701FR Multiframe
+SA	Standalone Enclosure Rear Plate

Enclosures

7700FR-C	3RU Multiframe which holds up to 15 single slot modules
7701FR	1RU Multiframe which holds up to 3 single or dual slot modules
S7701FR	Standalone enclosure

The 7700DA-AES-RJ is an eight-output distribution amplifier with auto equalizing inputs and reclocking for 110Ω balanced AES signals. The DA will automatically equalize a single balanced AES signal delivered over standard CAT 5 type cables with RJ-45 head connector. The DA will reclock the data with sampling frequencies of 32kHz, 44.1kHz, 48kHz and 96kHz.

The 7700DA-AES-RJ modules are equipped with card edge LED indicators that are used to provide quick and accurate assessment of the incoming signal integrity.

The 7700DA-AES-RJ modules occupy one card slot and can be housed in either a 1RU frame which will hold up to 3 modules, a 3RU frame which will hold up to 15 modules or a standalone enclosure which will hold 1 module.

Features & Benefits

- AES3-1992 standard for AES audio on 110Ω twisted pair cable
- Transformer coupled 110Ω balanced input (selectable Hi-Z)
- Data reclocking provides jitter reduction
- Automatic equalization
- Equalization and reclocking provides extended cable length compensation
- 8 - 110Ω balanced outputs
- Error LED indication for input PLL out of lock, parity error or biphase coding error

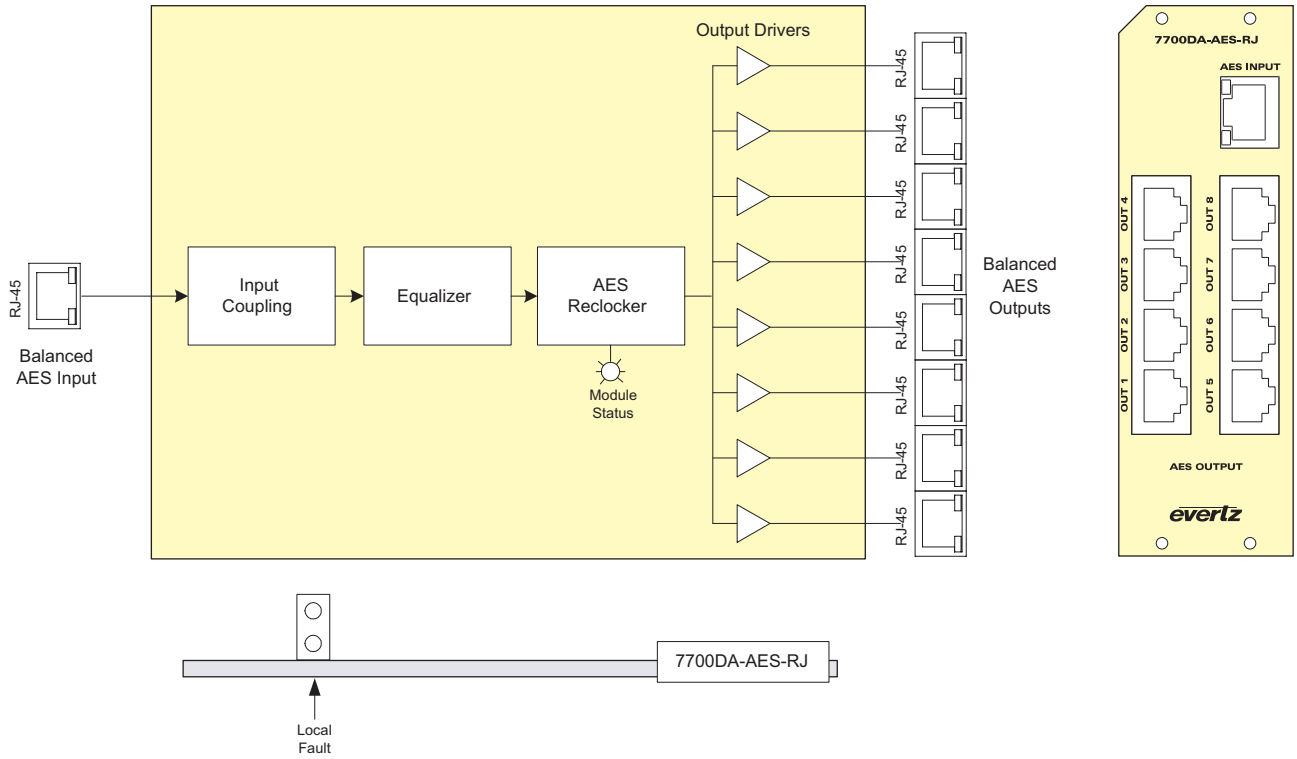

Specifications

AES Input:

Standard:	AES3-1992
Number of Inputs:	1
Connector:	RJ-45
Input Level:	2 to 7V p-p
Coupling:	Transformer
Input Impedance:	110Ω
Equalization:	Automatic to 300m with CAT5 (or equivalent) @ 48kHz AES signal
Sampling Frequency:	32kHz, 44.1kHz, 48kHz, and 96kHz

AES Outputs:

Number of Outputs:	8 reclocked
Connector:	RJ-45
Output Level:	5V p-p
Output Impedance:	110Ω

Electrical:

Voltage:	+12V DC
Safety:	ETL Listed, complies with EU low voltage directive
Power:	< 1.8W
EMI/RFI:	Complies with FCC Part 15, Class A EU EMC Directive

Physical:

Number of Slots:	2

Ordering Information

7700DA-AES-RJ	Auto Equalizing Balanced AES/EBU Distribution Amplifier Over CAT5 Cable
Ordering Options	Rear plate must be specified at time of order Eg: Model +3RU

Rear Plate Suffix

+3RU	3RU Rear Plate for use with 7700FR-C Multiframe
+1RU	1RU Rear Plate for use with 7701FR Multiframe
+SA	Standalone Enclosure Rear Plate

Enclosures

7700FR-C	3RU Multiframe, which holds 15 modules
7701FR	1RU Multiframe, which holds 3 modules
S7701FR	Standalone Enclosure

7700ADA6-EQ-L

Analog Video Distribution Amplifier with Cable Equalization and Loop Thru

The 7700ADA6-EQ-L is an equalizing 1x6 Analog Distribution Amplifier. The 7700ADA6-EQ-L features one balanced equalized input, one passive looping output and six outputs. The module has been designed to distribute a wide range of analog video signals. It can also distribute other pulses and signals that are less than 2Vp-p.

The 7700ADA6-EQ-L occupies one card slot in the 3RU frame, which will hold up to 15 modules or the 1RU frame, which will hold up to three modules.

Features & Benefits

- Passive loop thru
- Gain control
- High common mode range and common mode rejection ratio (CMRR)
- Jumper selectable AC or DC coupling
- Jumper selectable fast or slow back porch clamp
- DC level control when clamp is enabled
- Cable equalizer adjustment range: o to 300m of 8281 or 1694AA
- Consistent input impedance if card power is lost
- Module Status/Local Fault

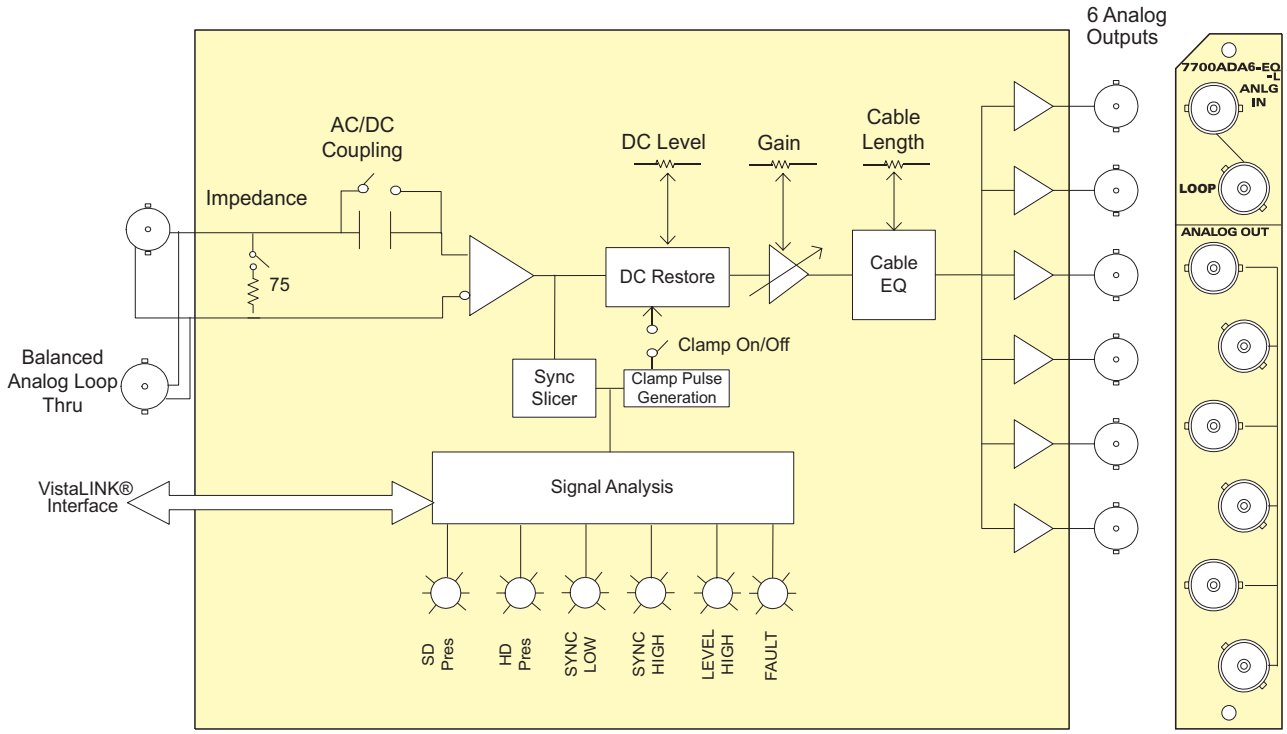

Specifications

Analog Video Input:

Standards:	Any analog video format, up to 2V p-p and 30MHz bandwidth
Connector:	BNC input per IEC 60169-8 Amendment 2
Common mode range:	> 6V p-p
CMRR:	> 70dB to 1kHz
Signal amplitude:	2.5V p-p max
Cable equalizer:	0 to 300m of Belden 8281 or 1694A cable
Coupling:	AC or DC (jumper selectable)
Return loss:	> 40dB to 10MHz, > 30dB to 30MHz
Clamp range:	> ±600mV
Fast clamp attenuation of 60Hz:	> 36dB

Analog Video Outputs:

Passive Loop:	1
Number of Outputs:	6
Connector:	BNC per IEC 60169-8 Amendment 2
Output impedance:	75Ω
Gain control range:	±5dB
DC level:	< ±100mV (with DC Coupling active and back porch clamp disabled)
Freq. Response:	< ±0.05dB no equalization (to 5.5MHz)
Differential Gain:	< 0.17% 0 to 300m
Differential Phase:	< 0.19° 0 to 300m
C/L gain inequality:	< ±0.1% for all cable lengths
C/L Delay:	< ±2ns
Output isolation:	> 42dB to 10MHz, > 32dB to 30MHz
Output return loss:	> 40dB to 30MHz
Noise performance:	< -78dB RMS NTC7 weighting < -70dB RMS 15kHz to 5.5MHz

Electrical:

Voltage:	+12V DC
Power:	1.2W
EMI/RFI:	Complies with FCC Part 15, Class A EU EMC Directive

Physical:

Number of slots:	1

Ordering Information

7700ADA6-EQ-L	Analog Video Distribution Amplifier with Cable Equalization and Loop Thru
Ordering Options	Rear Plate must be specified at time of order Eg: Model +3RU

Rear Plate Suffix

+3RU	3RU Rear Plate for use with 7700FR-C Multiframe
+1RU	1RU Rear Plate for use with 7701FR Multiframe
+SA	Standalone Enclosure Rear Plate

Enclosures

7700FR-C	3RU Multiframe which holds up to 15 single slot modules
7701FR	1RU Multiframe which holds up to 3 single or dual slot modules
S7701FR	Standalone enclosure

The 7700ADA6-L is a 1x6 Analog Distribution Amplifier with passive loop thru. It amplifies composite analog for distribution of 75Ω analog video signals.

The 7700ADA6-L amplifier has been designed to distribute a wide range of analog video signals. It can also distribute other pulses and signals that are less than 2Vp-p.

The 7700ADA6-L occupies one card slot in the 3RU frame, which will hold up to 15 modules or the 1RU frame, which will hold up to three modules.

Features & Benefits

- Passive loop thru
- Gain Control
- 75Ω or high impedance input (jumper selectable)
- High common mode range and common mode rejection ratio (CMMR)
- Jumper selectable AC or DC coupling
- Consistent input impedance if card power is lost
- Module Status/Local Fault

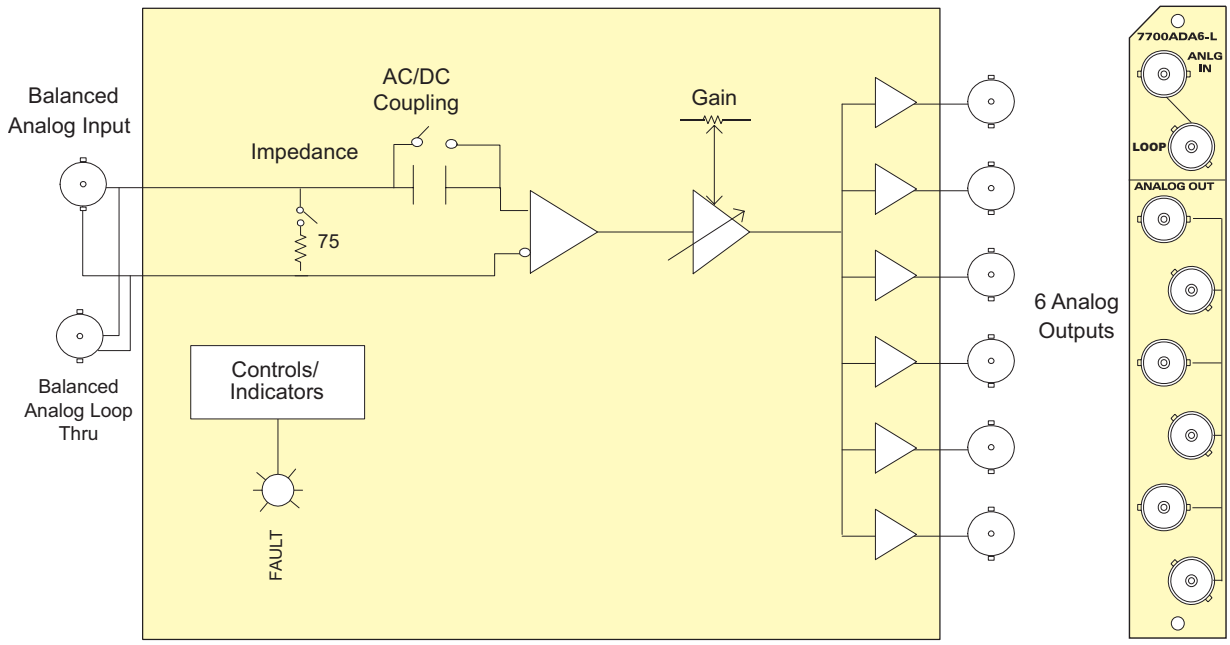

Specifications

Analog Video Input:

Standards:	Any analog video format, up to 2Vp-p and 30MHz bandwidth
Connector:	BNC per IEC 60169-8 Amendment 2
Common mode range:	>6Vp-p
CMRR:	> 70dB to 1kHz
Signal amplitude:	2.5Vp-p max
Impedance:	75Ω terminated, 35kW Hi-Z (jumper selectable)
Coupling:	AC or DC (jumper selectable)
Return loss:	>40dB to 10MHz, >30dB to 30MHz

Analog Video Outputs:

Number of Outputs:	6 Per Card
Connector:	BNC per IEC 60169-8 Amendment 2
Output impedance:	75Ω
Gain control range:	± 5dB
DC level (DC Coupling active):	< ± 100mV
Freq. Response:	<±0.05dB (to 5.5MHz)
Differential Gain:	<0.17 %
Differential Phase:	< 0.19 deg
C/L gain inequality:	<±0.1%
C/L Delay:	<±2nsec
Output isolation:	42dB to 10MHz, 32 dB to 30MHz
Output return loss:	>40dB to 30MHz
Noise performance:	<-78dB RMS NTC7 weighting, <-70dB RMS 15kHz to 5.5MHz

Electrical:

Voltage:	+ 12VDC
Power:	1.2 Watts
EMI/RFI:	Complies with FCC Part 15 Class A EU EMC Directive

Physical:

Number of Slots:	1

Ordering Information

7700ADA6-L	Analog Video Distribution Amplifier with Loop Thru
Ordering Options	Rear Plate must be specified at time of order Eg: Model +3RU

Rear Plate Suffix

+3RU	3RU Rear Plate for use with 7700FR-C Multiframe
+1RU	1RU Rear Plate for use with 7701FR Multiframe
+SA	Standalone Enclosure Rear Plate

Enclosures:

7700FR-C	3RU Multiframe which holds up to 15 single slot modules
7701FR	1RU Multiframe which holds up to 3 single or dual slot modules
S7701FR	Standalone enclosure

7700ADA7
Analog Video Equalizing Distribution Amplifier

The 7700ADA7 Analog Distribution Amplifier is a general purpose amplifier for distributing analog video signals. The 7700ADA7 features one balanced input with seven outputs. The 7700ADA7 amplifier has been designed to distribute a wide range of analog video signals. It can also distribute other pulses and signals that are less than 2V p-p.

The 7700ADA7 occupies one card slot in the 3RU frame, which will hold up to 15 modules or the 1RU frame, which will hold up to three modules.

Features & Benefits

- 75Ω or high impedance input (jumper selectable)
- High common mode range and common mode rejection ratio (CMMR)
- Gain control
- Jumper selectable AC or DC coupling
- Looping feature with external "T" connector
- Consistent input impedance if card power is lost
- VistaLINK® - capable offering remote control and configuration capabilities via SNMP (using VistaLINK® PRO, 9000NCP or 9000NCP2 Network Control Panel) is available when modules are used with the 3RU 7700FR-C frame and a 7700FC VistaLINK® Frame Controller

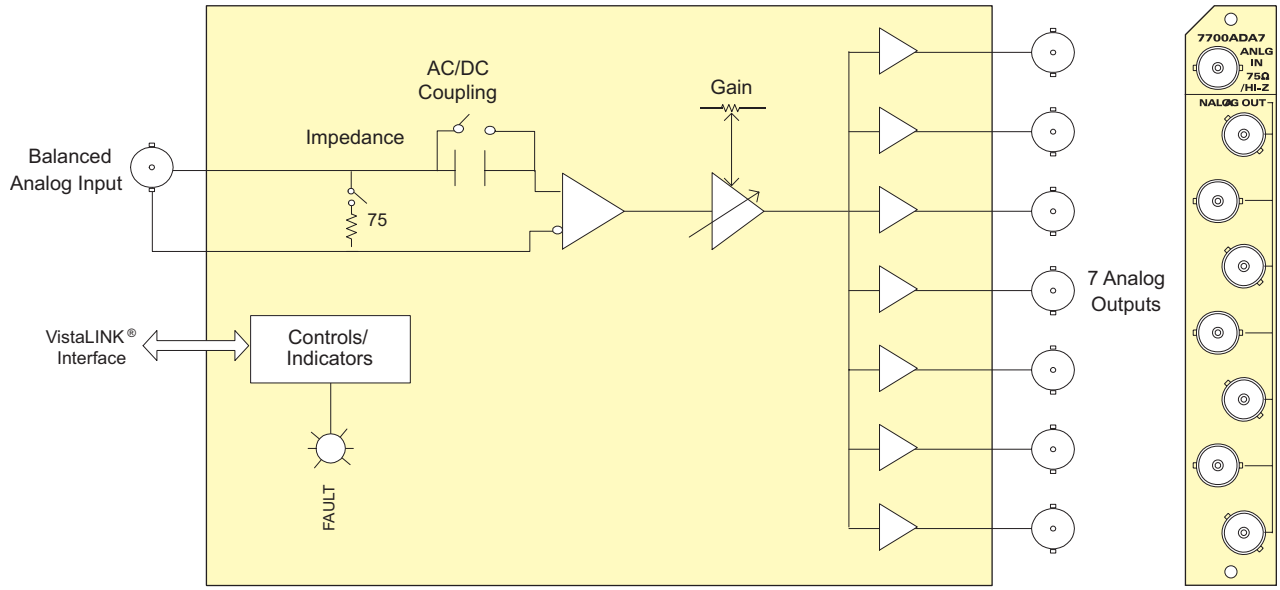

Specifications

Analog Video Input:

Standards:	Any analog video format, up to 2V p-p and 30MHz bandwidth
Connector:	BNC per IEC 60169-8 Amendment 2
Common mode range:	> 6V p-p
CMRR:	> 70dB to 1kHz
Signal amplitude:	2.5V p-p max
Impedance:	75Ω terminated, 35kΩ Hi-Z (jumper selectable)
Coupling:	AC or DC (jumper selectable)
Return loss:	> 40dB to 10MHz, > 30dB to 30MHz

Analog Video Outputs:

Number of Outputs:	7 per card
Connector:	BNC per IEC 60169-8 Amendment 2
Output impedance:	75Ω
Gain control range:	±5dB
DC level (DC Coupling active):	< ±100mV
Freq. Response:	< ±0.05dB (to 5.5MHz)
Differential Gain:	< 0.17%
Differential Phase:	< 0.19°
C/L gain inequality:	< ±0.1%
C/L Delay:	< ±2nsec
Output isolation:	42dB to 10MHz, 32dB to 30MHz
Output return loss:	> 40dB to 30MHz
Noise performance:	< -78dB RMS NTC7 weighting, < -70dB RMS 15kHz to 5.5MHz

Electrical:

Voltage:	+12V DC
Power:	4.6W
EMI/RFI:	Complies with FCC Part 15, Class A, EU EMC Directive

Physical:

Number of Slots:	1

Ordering Information

7700ADA7	Analog Video Distribution Amplifier (1x7)
Ordering Options	Rear Plate must be specified at time of order Eg: Model +3RU

Rear Plate Suffix

+3RU	3RU Rear Plate for use with 7700FR-C Multiframe
+1RU	1RU Rear Plate for use with 7701FR Multiframe
+SA	Standalone Enclosure Rear Plate

Enclosures

7700FR-C	3RU Multiframe which holds up to 15 single slot modules
7701FR	1RU Multiframe which holds up to 3 single or dual slot modules
S7701FR	Standalone enclosure

The 7700ADA-EQ Analog Video Distribution Amplifier is a general purpose amplifier for distributing analog video signals. The 7700ADA-EQ features one balanced equalized input with four outputs.

The 7700ADA-EQ amplifier has been designed to distribute a wide range of analog video signals. It can also distribute other pulses and signals that do not exceed 2V p-p.

Features & Benefits

- 75Ω or high impedance input (jumper selectable)
- High common mode range and common mode rejection ratio (CMMR)
- Gain control
- Jumper selectable AC or DC coupling
- Jumper selectable fast or slow back porch clamp
- DC level control when clamp is enabled
- Cable equalizer adjustment range: 0 to 300m of 8281 or 1694A
- Looping feature with external "T" connector
- Consistent input impedance if card power is lost

Card Edge LEDs
- Module status/Local Fault
- Power supply status
- EQ Warning

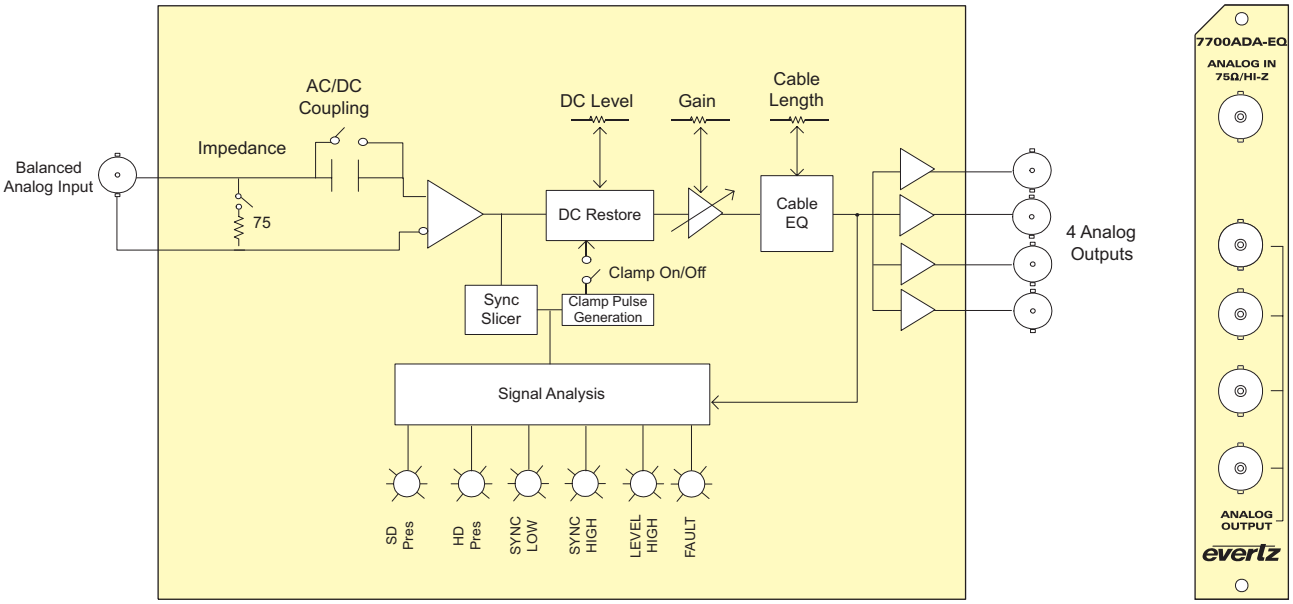

Specifications

Analog Video Input:

Standards:	Any analog video format, up to 2V p-p and 30MHz bandwidth
Connector:	1 BNC per IEC 60169-8 Amendment 2
Common mode range:	> 6V p-p
CMRR:	> 70dB-1kHz
Signal amplitude:	2.5V p-p max
Cable equalizer:	0 to 300m of Belden 8281 or 1694A cable
Impedance:	75Ω terminated, 35kΩ Hi-Z (jumper selectable)
Coupling:	AC or DC (jumper selectable)
Return loss:	> 40dB to 10MHz, > 30dB to 30MHz
Clamp range:	> ±600mV
Fast clamp attenuation of 60Hz:	> 36dB

Analog Video Outputs:

Number of Outputs:	4 Per Card
Connector:	BNC per IEC 60169-8 Amendment 2
Output impedance:	75Ω
Gain control range:	±5dB
DC level:	< ±100mV (with DC Coupling active and back porch clamp disabled)
DC level Control range:	< ±200mV (with back porch clamp enabled)
Freq. Response:	< ±0.05dB no equalization (to 5.5MHz) < ±0.09dB for 5 to 100m Belden 8281 or 1694A (to 5.5MHz) < ±0.15dB for 100 to 300m Belden 8281 or 1694A (to 5.5MHz)
Differential Gain:	< 0.17% 0 to 300m
Differential Phase:	< 0.19° 0 to 300m
C/L gain inequality:	< ±0.1% for all cable lengths
C/L Delay:	< ±2ns
Output isolation:	> 42dB to 10MHz, > 32dB to 30MHz
Output return loss:	> 40dB to 30MHz
Noise performance:	< -78dB RMS NTC7 weighting, < -70dB RMS 15kHz to 5.5MHz

Electrical:

Voltage:	+12V DC
Power:	1.2W
EMI/RFI:	Complies with FCC Part 15, Class A, EU EMC Directive

Physical:

Number of Slots:	1

Ordering Information

7700ADA-EQ	Analog Video Distribution Amplifier with Cable Equalization (1x4)
Ordering Options	Rear Plate must be specified at time of order Eg: Model +3RU

Rear Plate Suffix

+3RU	3RU Rear Plate for use with 7700FR-C Multiframe
+1RU	1RU Rear Plate for use with 7701FR Multiframe
+SA	Standalone Enclosure Rear Plate

Enclosures

7700FR-C	3RU Multiframe which holds up to 15 single slot modules
7701FR	1RU Multiframe which holds up to 3 single or dual slot modules
S7701FR	Standalone enclosure

7700ADA7-EQ

Analog Video Distribution Amplifier

The 7700ADA7-EQ Equalizing Analog Distribution Amplifier is a general purpose amplifier for distributing analog video signals. The 7700ADA7-EQ features one balanced equalized input with seven outputs. It has been designed to distribute a wide range of analog video signals. It can also distribute other pulses and signals that are less than 2V p-p.

The 7700ADA7-EQ is housed in the 3 RU frame, which will hold up to 15 modules or the 1RU frame, which will hold up to three modules.

Features & Benefits

- 75Ω or high impedance input (jumper selectable)
- High common mode range and common mode rejection ratio (CMMR)
- Gain control
- Jumper selectable AC or DC coupling
- Jumper selectable fast or slow back porch clamp
- DC level control when clamp is enabled
- Cable equalizer adjustment range: 0 to 300m of 8281 or 1694A
- Looping feature with external "T" connector and external termination
- Consistent input impedance if card power is lost
- VistaLINK® capable offering remote control and configuration capabilities via SNMP (using VistaLINK® PRO, 9000NCP or 9000NCP2 Network Control Panel) is available when modules are used with the 3RU 7700FR-C frame and a 7700FC VistaLINK® Frame Controller

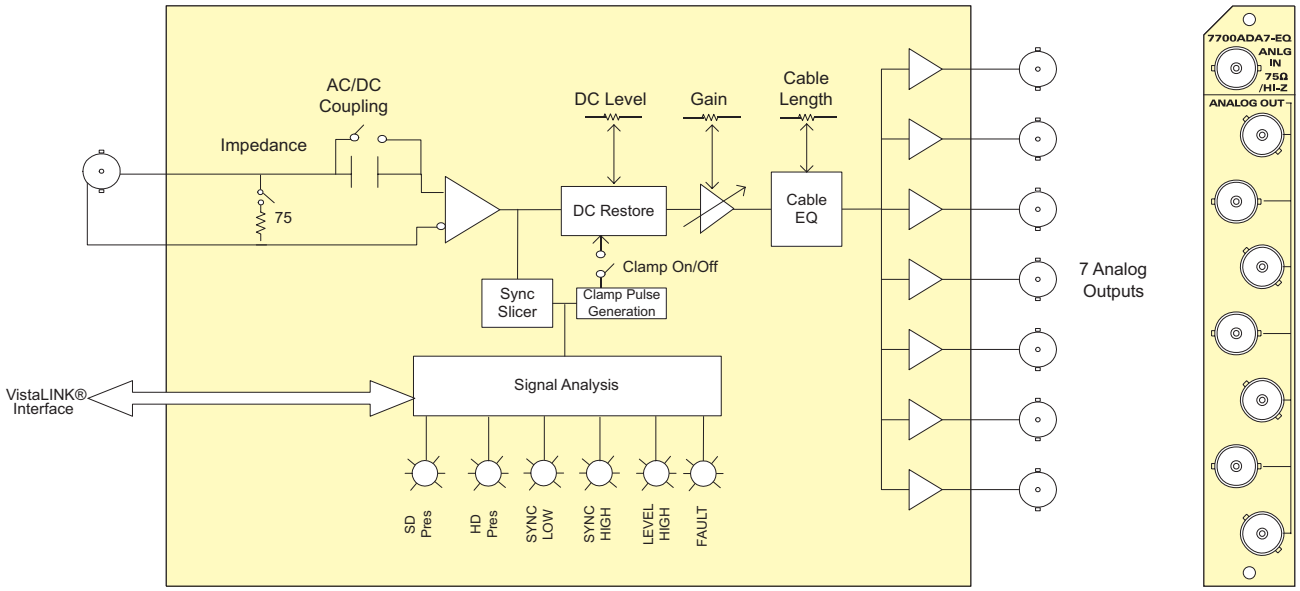

Specifications

Analog Video Input:

Standards:	Any analog video format, up to 2V p-p and 30MHz bandwidth
Connector:	BNC input per IEC 60169-8 Amendment 2
Common mode range:	> 6V p-p
CMRR:	> 70dB to 1kHz
Signal amplitude:	2.5V p-p max
Cable equalizer:	0 to 300m of Belden 8281 or 1694A cable
Impedance:	75Ω terminated, 35kΩ Hi-Z (jumper selectable)
Coupling:	AC or DC (jumper selectable)
Return loss:	> 40dB to 10MHz, > 30dB to 30MHz
Clamp range:	> ±600mV
Fast clamp attenuation of 60Hz:	> 36dB

Analog Video Outputs:

Number of Outputs:	7
Connector:	BNC per IEC 60169-8 Amendment 2
Output impedance:	75Ω
Gain control range:	±5dB
DC level:	< ±100mV (with DC Coupling active and back porch clamp disabled)
DC level Control range:	< ±200mV (with back porch clamp enabled)
Freq. Response:	< ±0.05dB no equalization (to 5.5MHz) < ±0.09dB for 5 to 100m Belden 8281 or 1694A (to 5.5MHz) < ±0.15dB for 100 to 300m Belden 8281 or 1694A (to 5.5MHz)
Differential Gain:	< 0.17% 0 to 300m
Differential Phase:	< 0.19° 0 to 300m
C/L gain inequality:	< ±0.1% for all cablelengths
C/L Delay:	< ±2nsec
Output isolation:	> 42dB to 10MHz, > 32dB to 30MHz
Output return loss:	> 40dB to 30MHz
Noise performance:	< -78dB RMS NTC7 weighting < -70dB RMS 15kHz to 5.5MHz

Electrical:

Voltage:	+12V DC
Power:	5W

Physical:

Number of slots:	1

Ordering Information

7700ADA7-EQ	Analog Video Equalizing Distribution Amplifier (1x7)
Ordering Options	Rear Plate must be specified at time of order Eg: Model +3RU

Rear Plate Suffix

+3RU	3RU Rear Plate for use with 7700FR-C Multiframe
+1RU	1RU Rear Plate for use with 7701FR Multiframe
+SA	Standalone Enclosure Rear Plate

Enclosures

7700FR-C	3RU Multiframe which holds up to 15 single slot modules
7701FR	1RU Multiframe which holds up to 3 single or dual slot modules
S7701FR	Standalone enclosure

The 7700ADA-AUD Dual Analog Audio distribution amplifier is a general purpose amplifier for distributing analog audio signals. It can be operated as two independent 4 output amplifiers for stereo signals, or as a single amplifier with 8 outputs where higher fanout is required.

The 7700ADA-AUD can be operated with either differential or single ended inputs and offers a wide range of gain adjustment to handle a wide variety of input signals.

Features & Benefits

- Differential and single ended input (automatic single ended to differential conversion)
- Configurable for stereo (2-1x4) or mono (1x8)
- High impedance input
- Low impedance outputs
- Wide gain adjustment range
- High common mode range and common mode rejection ratio (CMRR)
- Very high SNR
- Very low THD+N

Card Edge LEDs
- Module status/Local fault

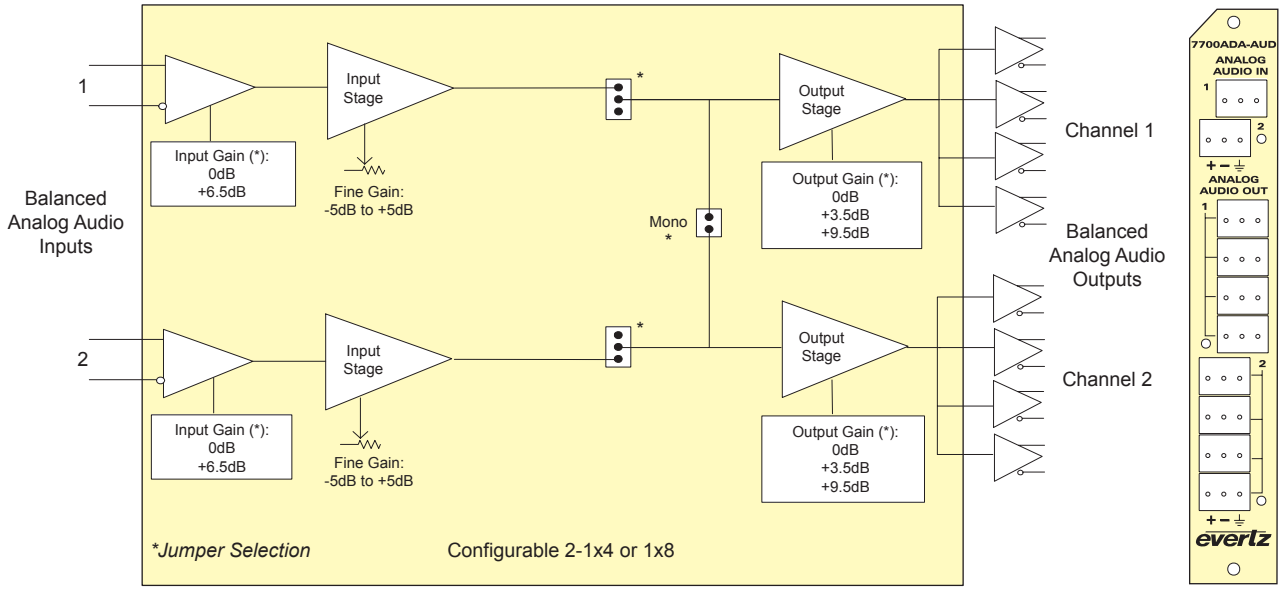

Specifications

Analog Audio Input:

Standards:	Any analog audio signal
Number of inputs:	2 (Balanced or Single ended)
Connectors:	3-pin removable terminal strips
Input step gain:	0dB or +6.5dB (configurable with jumpers)
Fine gain control:	-6.5dB to +9.5dB (card edge pot adjustable)
Max input level:	
0dB input gain:	+34dBu
+6.5dB input gain:	+28dBu
Noise floor:	-87dBu (0dB input gain), -91dBu (+6.5dB input gain jumper setup)
Common mode rejection:	> 115dB @ 60Hz, 90dB @ 20kHz (tested with +28dBu CM input)
Common mode range:	
0dB input gain:	> ±22V
+6.5dB input gain:	> ±7V
Input impedance:	
0dB input gain:	33kΩ
+6.5dB input gain:	15kΩ

Analog Audio Outputs:

Number of Outputs:	
Stereo Mode:	4 outputs each on left and right channels
Mono Mode:	8 outputs
Connectors:	3-pin removable terminal strips
Output step gain:	0, 3.5 or 9.5dB (configurable with jumpers)
Max output level:	+28dBu across hi-impedance load +24dBm into 600Ω load
Output impedance:	66Ω
Frequency Response:	±0.02dB 20Hz to 20kHz
Stereo phase mismatch:	< 1° @ 20kHz
SNR:	
0dB input gain:	115dB
+6.5dB input gain:	119dB
THD+ Noise:	0.001% 20Hz to 20kHz @ 28dBu, unweighted RMS, Hi-Z load 0.01% with 600Ω up to 24dBm
Intermodulation Distortion:	0.001% - SMPTE @ 18dBu
Stereo crosstalk:	> 115dB @ 1kHz, > 93dB @ 20kHz
Output Isolation:	> 110dB @ 1kHz, 100dB @ 20kHz

Electrical:

Voltage:	+12V DC
Power:	12W
EMI/RFI:	Complies with FCC Part 15, Class A, EU EMC Directive

Physical:

Number of Slots:	1

Ordering Information:

7700ADA-AUD	Balanced Analog Audio Distribution Amplifier (Configurable 1x8 or 2-1x4)
Ordering Options	Rear Plate must be specified at time of order Eg: Model +3RU

Rear Plate Suffix

+3RU	3RU Rear Plate for use with 7700FR-C Multiframe
+1RU	1RU Rear Plate for use with 7701FR Multiframe
+SA	Standalone Enclosure Rear Plate

Enclosures

7700FR-C	3RU Multiframe which holds up to 15 single slot modules
7701FR	1RU Multiframe which holds up to 3 single or dual slot modules
S7701FR	Standalone enclosure

7700ADA-AUD-MM

Dual Analog Audio Distribution with Mono Mix

The 7700ADA-AUD-MM Balanced Analog Audio Distribution Amplifier with Mono Mix is a general purpose amplifier for distributing analog audio signals and providing a mono mix output of the stereo inputs. It can be operated with either differential or single ended inputs and offers a wide range of gain adjustment to handle a wide variety of input signals.

The 7700ADA-AUD-MM occupies one card slot and can be housed in either a 1RU frame, which will hold up to three modules, or a 3 RU frame, which will hold up to 15 modules.

Features & Benefits

- Differential and single ended inputs (automatic single ended to differential conversion)
- High impedance inputs
- Low impedance outputs
- Wide gain adjustment range
- High common mode range and common mode rejection ratio
- Very high SNR and very low THD+N
- Mono Mix of the stereo input
- Module Status/Local Fault

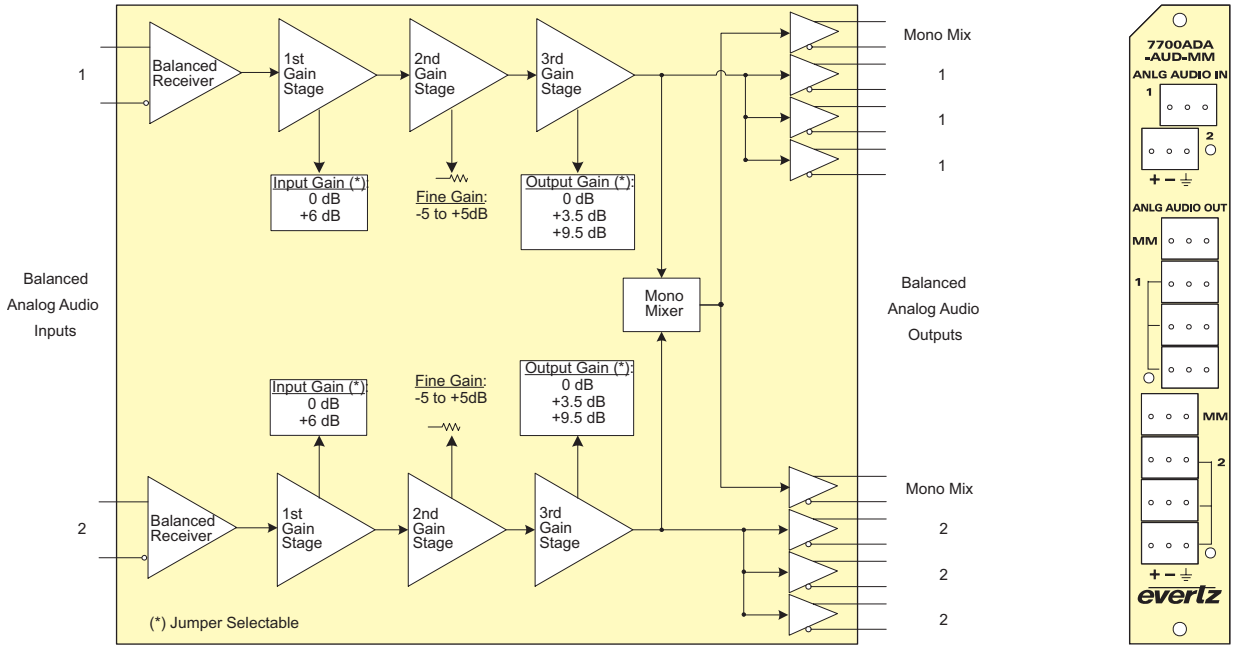

Specifications

Analog Audio Inputs:

Standard:	Any analog audio signal
Number of Inputs:	2 (Balanced or Single ended)
Connector:	3-pin removable terminal strips
Maximum Input Level:	
0dB Input Gain:	+33dBu
+6dB Input Gain:	+28dBu
Noise Floor:	-87dBu (0dB input gain), -91dBu (+6dB input gain jumper setup)
Common Mode Rejection:	> 90dB @ 60Hz, 60dB @ 20kHz (tested with +28 dBu CM input)
Common Mode Range:	
0dB Input Gain:	> ±22V
+6dB Input Gain:	> ±7V
Input Impedance:	
0dB Input Gain	33kΩ
+6dB Input Gain	15kΩ

Analog Audio Outputs:

Number of Outputs:	
Distribution	
Amplified Outputs:	3 outputs each of left and right channels
Mono Mix Outputs:	2 outputs total
Connectors:	3-pin removable terminal strips
Maximum Output Level:	+28dBu across hi-impedance load +24dBm into 600Ω load
Output Impedance:	66Ω
Frequency Response:	±0.02dB 20Hz to 20kHz
Stereo Phase Mismatch:	< 1° @ 20kHz
SNR:	
0dB Input Gain:	115dB
+6dB Input Gain:	119dB
THD+ Noise:	0.001% 20Hz to 20kHz @ 28dBu, unweighted RMS
Intermodulation Distortion:	0.001% - SMPTE @ 18dBu
Stereo Crosstalk:	>115dB @ 1kHz, >93dB @ 20kHz

Available Gains:

Input Step Gain:	0dB or +6dB (configurable with jumpers)
Fine Gain Control:	-5 to +5dB (card edge pot adjustable)
Output Step Gain:	0, 3.5 or 9.5dB (configurable with jumpers)

Electrical:

Voltage:	+12V DC
Power:	12W
EMI/RFI:	Complies with FCC regulations for class A devices Complies with EU EMC directive

Physical:

Number of slots:	1

Ordering Information

7700ADA-AUD-MM	Dual Analog Audio Distribution Amplifier with Mono Mix
Ordering Options	Rear Plate must be specified at time of order Eg: Model +3RU

Rear Plate Suffix

+3RU	3RU Rear Plate for use with 7700FR-C Multiframe
+1RU	1RU Rear Plate for use with 7701FR Multiframe

Enclosures

7700FR-C	3RU Multiframe which holds up to 15 single slot modules
7701FR	1RU Multiframe which holds up to 3 single or dual slot modules

The 7700ADA-ETSI High Amplitude Distribution Amplifier is a general purpose amplifier with an equalizing function for distributing a wide range of digital and analog signals. It has been designed to distribute pulses and signals up to ±3.5V ITU-T G.703 E12 (Physical/electrical characteristics of hierarchical digital interface at 2048kb/s) signals. The 7700ADA-ETSI features one balanced equalized input with four outputs.

The 7700ADA-ETSI occupies one card slot and can be housed in a 1RU frame which will hold up to three modules, a 3RU frame which will hold up to 15 modules or a standalone enclosure.

Features & Benefits

- 75Ω input impedance
- Distribute signals up to ±3.5V to 30MHz
- High common mode range and common mode rejection ratio (CMRR)
- ±5.5dB Gain control range
- Jumper selectable AC or DC coupling
- Cable equalizer adjustment range: 0 to 300m of Belden 8281 or 1694A
- Consistent input impedance if card power is lost

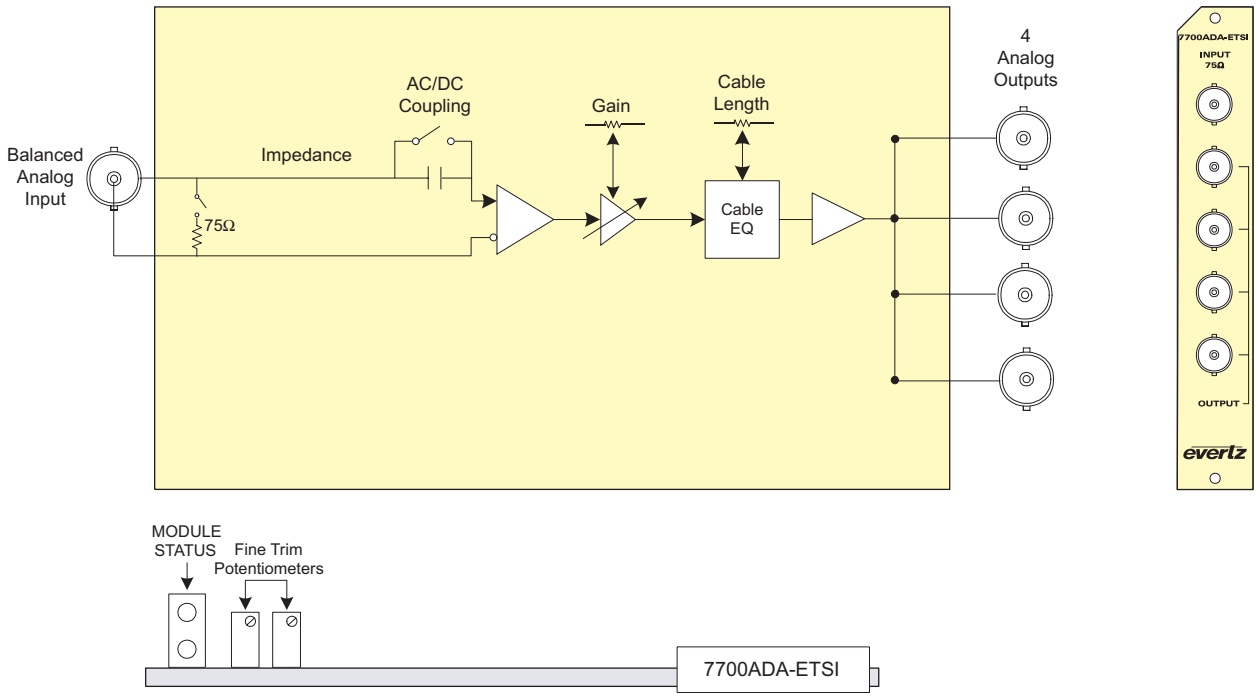

Specifications

Inputs:

Standards:	Any analog waveform up to ±3.5V and 30MHz bandwidth
Connector:	1 BNC per IEC 60169-8 Amendment 2
Common mode range:	> 6V p-p
CMRR:	> 60dB to 1kHz
Signal amplitude:	Up to ±3.5V
Cable equalizer:	0 to 300m of Belden 8281 or 1694 cable
Impedance:	75Ω
Coupling:	AC or DC (jumper selectable)
Return loss:	> 40dB to 10MHz, > 25dB to 30MHz

Outputs:

Number of Outputs:	4 Per Card
Connector:	BNC per IEC 60169-8 Amendment 2
Output impedance:	75Ω
Gain control range:	±6dB
Freq. Response:	< ±0.05dB no equalization (to 5.5MHz) < ±0.09dB for 5 to 100m Belden 8281 or 1694A (to 5.5Mhz) < ±0.15dB for 100 to 300m Belden 8281 or 1694A (to 5.5Mhz)
Differential Gain:	< 0.25% 0 to 300m (for single load)
Differential Phase:	< 0.19° 0 to 300m
C/L gain inequality:	< +/-0.1% for all cable lengths
C/L Delay:	< +/-2nsec
Output isolation:	> 42dB to 10MHz, > 32dB to 30MHz
Output return loss:	> 40dB to 30MHz
Noise performance:	< -68dB RMS NTC7 weighting, < -60dB RMS 15kHz to 5.5MHz

Electrical:

Voltage:	+12V DC
Power:	2.5W

Ordering Information

7700ADA-ETSI	High Amplitude Analog Distribution Amplifier (1x4)
Ordering Options	Rear Plate must be specified at time of order Eg: Model +3RU

Rear Plate Suffix

+3RU	3RU Rear Plate for use with 7700FR-C Multiframe
+1RU	1RU Rear Plate for use with 7701FR Multiframe
+SA	Standalone Enclosure Rear Plate

Enclosures

7700FR-C	3RU Multiframe which holds up to 15 single slot modules
7701FR	1RU Multiframe which holds up to 3 single or dual slot modules
S7701FR	Standalone Enclosure

7710ARC, 7710ARC-F

SD Aspect Ratio Converter with Fill Input and Keying

The 7710ARC and 7710ARC-F are dual standard (525/625) serial digital 270Mb/s high quality motion adaptive video aspect ratio converters, designed for use in facilities where 4x3 content is to be used in a 16x9 infrastructure.

With full 10-bit processing, the 7710ARC and 7710ARC-F convert any aspect ratio picture input to any aspect ratio picture output, maintaining excellent image quality. The 7710ARC series supports input side Wide Screen Signaling (WSS) and Active Format Description (AFD) to automatically steer aspect ratio conversion.

The 7710ARC has a second program input that can be used for seamless switching between two input sources. The 7710ARC-F accepts a FILL input and can key that content into un-used portions of the output raster (ie.side panels typically generated when converting 4:3 to 16:9). The module also supports WSS and AFD insertion capability on the output side, along with transparent handling of other HANC and VANC from the input to the output. All parameters may be controlled by use of the on-screen display menu.

Features & Benefits

- Any aspect ratio to any aspect ratio, with standard support for 16:9 letterbox, 14:9 letterbox, 4:3 center crop, and 4:3 anamorphic squeeze aspect ratio conversions
- Flexible ARC control: manual configuration or slave to incoming AFD or WSS
- Second program input for seamless switching between two sources (7710ARC)
- FILL input for keying into un-used portions of output raster (7710ARC-F)
- Motion adaptive de-interlacer for exceptional vertical resolution
- High quality 10-bit video processing
- Variable vertical blanking to pass custom VANC data
- Full VANC and HANC transfer from input to output with provisionable delay
- 10 user presets for storing custom module configurations
- Reference input allows for phasing of output video
- GPI input to recall module configuration
- On-screen display used to configure the operating modes
- Card Edge LEDs for signal presence, input and output modes, module status
- VistaLINK® capable for remote monitoring and control via SNMP (using VistaLINK® Pro, 9000NCP2 or 9000NCP Network Control Panel) when installed in 7700FR-C frame with 7700FC VistaLINK® Frame Controller
- Flexible ARC control: slave to incoming WSS or AFD; fixed output WSS or AFD; via GPI; or remote configuration

7710ARC

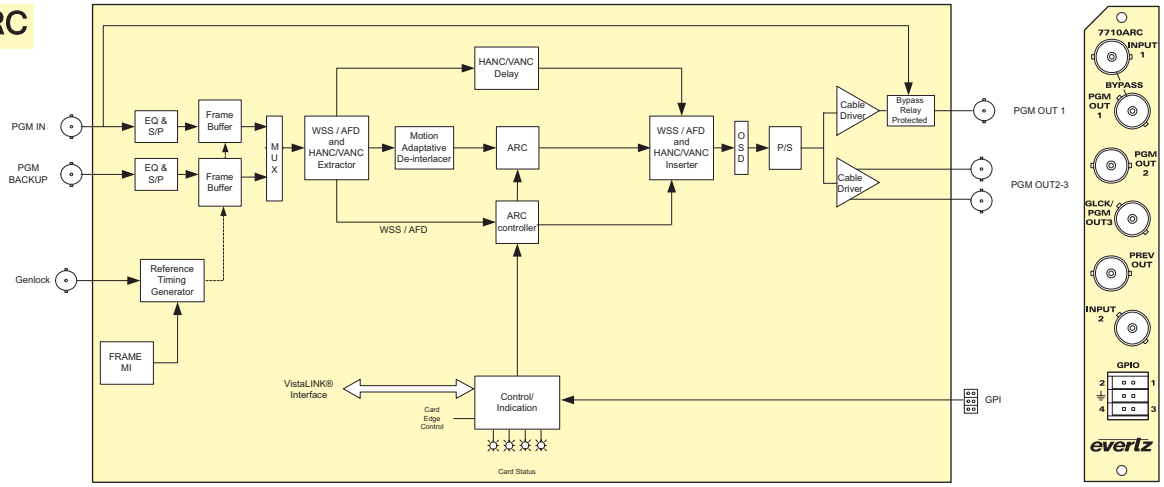

7710ARC-F

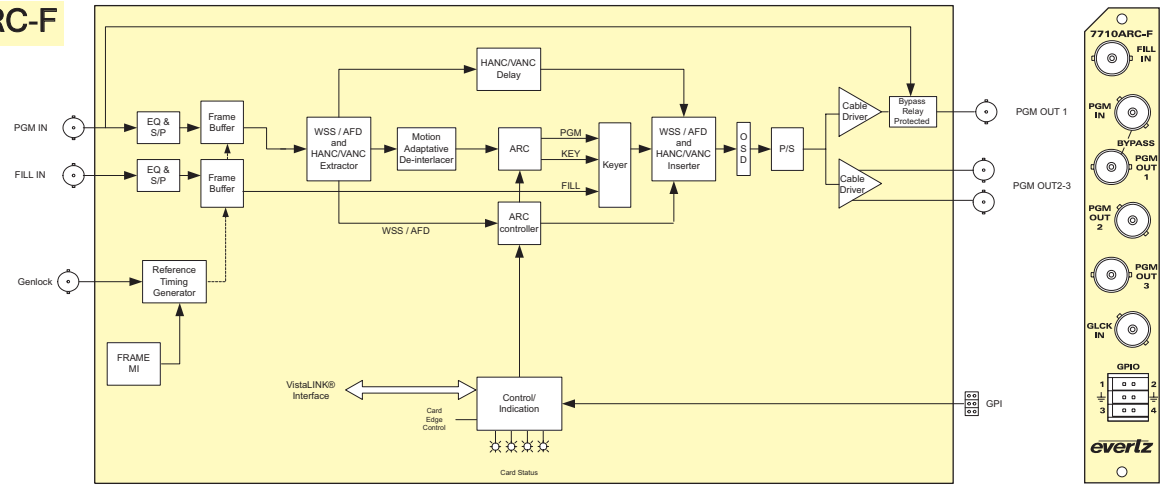

Specifications

Serial Video Input:

Standard:	SMPTE 259M
Connectors:	2 BNC per IEC 60169-8 Amendment 2
Input Equalization:	Automatic to 300m @ 270Mb/s with Belden 8281 (or equivalent) cable
Return Loss:	> 15dB up to 270MHz

Serial Video Outputs:

Standard:	SMPTE 259M
Number of Outputs:	3 Per module
Connector:	BNC per IEC 60169-8 Amendment 2
Signal Level:	800mV nominal
DC Offset:	0V ±0.5V
Rise and Fall Time:	750ps nominal
Overshoot:	< 10% of amplitude
Return Loss:	> 15dB up to 270MHz
Jitter:	< 0.2 UI

Genlock Input:

Standards:	NTSC, PAL, black or tri-level autodetect
Number of Inputs:	1
Connectors:	BNC per IEC 60169-8 Amendment
Impedance:	Hi-Z or 75Ω (jumper configurable)
Return Loss:	> 40dB up to 10MHz

GPI Inputs/Outputs:

Number:	4 (configurable as inputs or outputs)
Type:	Opto-isolated, active low with internal pull-ups to +5 or +12V (jumper settable)
Connector:	6-pin removable terminal block
Signal Level:	Closure to ground
Function:	
Inputs:	User Preset select

Electrical:

Voltage:	+12V DC
Power:	13.5W
EMI/RFI:	Complies with FCC Part 15 Class A EU EMC Directive

Physical:

Number of Slots:	
7700 frame mounting:	2
7701 frame mounting:	1

Ordering Information

7710ARC	SD Aspect Ratio Converter
7710ARC-F	SD Aspect Ratio Converter with Fill Input and Keying

Ordering Options: Rear Plate must be specified at time of order
Eg. Model +3RU

Rear Plate Suffix

+3RU	3RU Rear Plate for use with 7700FR-C Multiframe
+1RU	1RU Rear Plate for use with 7701FR Multiframe
+SA	Standalone Enclosure Rear Plate

Accessories:

7700FC	VistaLINK® Frame Controller
9000NCP	1RU VistaLINK® General Purpose Network Control Panel
9000NCP2	2RU VistaLINK® General Purpose Network Control Panel

Enclosures:

7700FR-C	3RU Multiframe, which holds 15 modules
7701FR	1RU Multiframe, which holds 3 modules
S7701FR	Standalone Enclosure

7710DCDA-HD

HD Downconverter & Distribution Amplifier

The 7710DCDA-HD is a reclocking high definition serial digital video distribution amplifier and a high quality downconverter for 1.5Gb/s HDTV signals. It can also function as a monitoring distribution amplifier for standard definition (480i) 270Mb/s signals. It provides 4 reclocked DA outputs and 3 downconverted SDI or composite analog NTSC/PAL outputs (selectable). It accepts all the popular international SMPTE 292M video formats. When the 7710DCDA-HD downconverts 1080p/23.98sF input video to 525i/59.94 with a 3:2 pulldown, the 3:2 pulldown cadence can be free running or locked to embedded RP188 time code.

The 7710DCDA-HD has color space conversion from ITU rec. 709 to ITU rec. 601, and will provide various downconverted formats such as 16:9 letterbox, 14:9 letterbox, 13:9 letterbox, 4:3 center crop, and 4:3 anamorphic squeeze. It supports Widescreen Signaling (WSS) on the output to handle various aspect ratios of program material.

Full 10-bit processing is provided throughout the signal path to achieve excellent downconversion quality. The module allows for selectable horizontal and vertical filters to control picture sharpness. It also de-embeds two groups of audio, and re-embeds the audio on the SDI output in time with the video. All parameters may be controlled by use of the on-screen display menu.

The 7710DCDA-HD has a closed caption monitoring capability that decodes CEA-608 or CEA-708 captions that have been encoded into the VANC data space of an HD video input, or CEA-608 captions from an SD video input.

The 7710DCDA-HD provides card edge LEDs to indicate signal present and audio groups present. The 7710DCDA-HD occupies one card slot in the 3RU frame, which will hold up to 15 modules or the 1RU frame, which will hold up to three modules.

Features & Benefits

- Serial digital 1.5Gb/s HD input per SMPTE 292M
- Supports most international standards including 1080i/60, 1080i/59.94, 1080i/50, 1080p/24, 1080p/23.98, 1080p/24sF, 1080p/23.98sF, 720p/60, 720p/59.94, 480p/60, and 480p/59.94
- Will also accept 270Mb/s SD (480i) input SDI per SMPTE 259M in a pass-through mode - auto senses HD or SD inputs
- 4 Reclocked DA outputs (HD if HD inputs applied, SD if SD inputs applied)
- 3 Selectable SDI or Composite Outputs (downconverted from HD if HD input applied, from reclocked SD if SD input applied)
- High quality HD ⇨ SD downconversion
- Supports 16:9 letterbox, 14:9 letterbox, 13:9 letterbox, 4:3 center crop, and 4:3 anamorphic squeeze aspect ratio conversions
- 1080p/23.98sF conversion to 525i/59.94 with 3:2 pulldown sequence
- HD to SD color space conversion (ITU rec. 709 to ITU rec. 601)
- On-screen display used to configure the operating modes
- De-embeds Audio from HD video and embeds into standard definition SDI video (2 groups)
- Moves ANC data (e.g. captioning, timecode) from HD video to standard definition SDI video
- Decodes and displays CEA-608 or CEA-708 captions from incoming video
- On-screen aspect ratio marker
- Support for Widescreen Signaling (WSS) on output
- Card Edge LEDs for signal presence, equalization warning, audio groups present, module status
- VistaLINK® capable offering remote control and configuration capabilities via SNMP (using VistaLINK® PRO, 9000NCP or 9000NCP2 Network Control Panel) is available when modules are used with the 3RU 7700FR-C frame and a 7700FC VistaLINK® Frame Controller

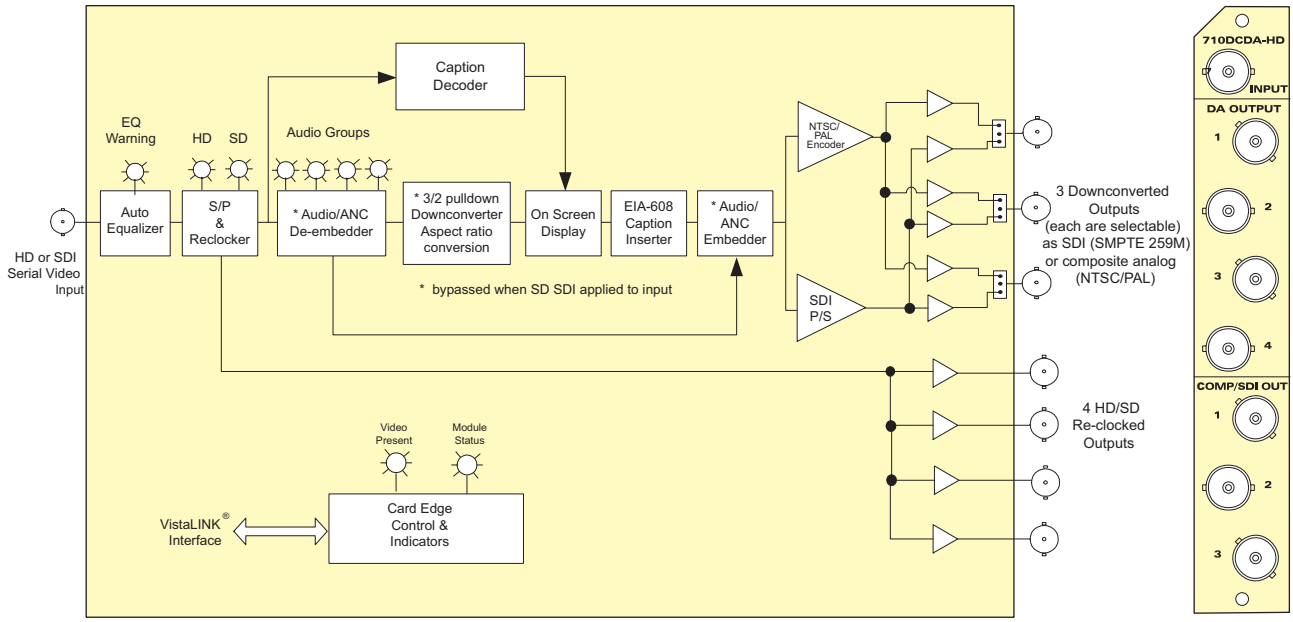

Specifications

Serial Video Input:

Standard:	SMPTE 259M - Pass-through mode SMPTE 292M (1.5Gb/s), SMPTE 260M, SMPTE 274M, SMPTE 296M, SMPTE 349M 1080i/60, 1080i/50, 1080p/30sF, 1080p/25sF, 1080p/24sF, 1035i/60, 720p/60, 480p/60 and the 1/1.001 divisor versions where applicable software selectable or autodetect
Connector:	BNC per IEC 60169-8 Amendment 2
Input Equalization:	Automatic to 100m @ 1.5Gb/s with Belden 1694A or equivalent cable
Return Loss:	> 15dB up to 1.5GHz

Reclocked Serial Video DA Outputs:

Standard:	Same as input (SMPTE 259M or SMPTE 292M)
Number of Outputs:	4 per card reclocked
Connector:	BNC per IEC 60169-8 Amendment 2
Signal Level:	800mV nominal
DC Offset:	0V ±0.5V
Rise and Fall Time:	200ps nominal for HD 750ps nominal for SD
Overshoot:	< 10% of amplitude
Return Loss:	> 15dB up to 1.0GHz, > 10dB up to 1.5GHz
Jitter:	< 0.2 UI

Downconverted Serial Video Outputs:

Standard:	SMPTE 259M-C (270Mb/s)
Number of Outputs:	Up to 3 per card (jumper selectable)
Connector:	BNC per IEC 60169-8 Amendment 2
Signal Level:	800mV nominal
DC Offset:	0V ±0.5V
Rise and Fall Time:	750ps nominal
Overshoot:	< 10% of amplitude
Return Loss:	> 15dB at 270Mb/s
Jitter:	< 0.2 UI

Downconverted Composite Analog Video Outputs:

Standards:	Analog composite NTSC (SMPTE 170M) or Analog composite PAL (ITU-R BT.470)
Number of Outputs:	Up to 3 per card (jumper selectable)
Connectors:	BNC per IEC 60169-8 Amendment 2
Signal Level:	1V p-p nominal
DC Offset:	0V ±0.1V
Return Loss:	> 35dB up to 5MHz
Frequency Response:	0.2dB to 4MHz
Differential Phase:	< 0.5°(< 0.3° typical)
Differential Gain:	< 0.8% (< 0.5% typical)
SNR:	> 78dB to 5MHz (shallow ramp)
Impedance:	75Ω

Input to Output Processing Delay:

Video Delay:	Just less than 1 to 2 frames depending on input video format, processing mode and phase setting (refer to table 3 in manual), ie: with 1080i/59.94 input the delay is < 1 Frame delay
Audio Delay:	Audio is delayed and re-embedded in time with the output picture

Electrical:

Voltage:	+12V DC
Power:	10W
EMI/RFI:	Complies with FCC Part 15, Class A EU EMC Directive

Physical:

Number of slots:	1

Ordering Information

7710DCDA-HD	HD downconverter and Distribution Amplifier (4 HD reclocked 1.5Gb/s, selectable 3 SD SDI outputs or 3 composite analog outputs)

Ordering Options Rear Plate must be specified at time of order
Eg: Model +3RU

Rear Plate Suffix

+3RU	3RU Rear Plate for use with 7700FR-C Multiframe
+1RU	1RU Rear Plate for use with 7701FR Multiframe
+SA	Standalone Enclosure Rear Plate

Accessories

7700FC	VistaLINK® Frame Controller
9000NCP	1RU VistaLINK® General Purpose Network Control Panel
9000NCP2	2RU VistaLINK® General Purpose Network Control Panel

Enclosures

7700FR-C	3RU Multiframe which holds up to 15 single slot modules
7701FR	1RU Multiframe which holds up to 3 single or dual slot modules
S7701FR	Standalone enclosure

7710UC-KF

HD Key/Fill Upconverter

The 7710UC-KF is designed to solve the problems of adapting to different HDTV formats, by offering high quality upconversion of Key and Fill signals.

The 7710UC-KF Key and Fill upconverter is re-configurable to provide high quality upconversion of your standard definition key and fill signals to common 1.5Gb/s high definition (SMPTE 292M) video formats.

The units occupy two card slots in the 3 RU frame, which will hold up to seven 2 slot modules. It occupies one slot in the 1RU frame, which will hold up to three modules. The units also provide card edge LEDs to indicate signal present and genlock present.

Features & Benefits

- High quality SD -> HD upconversion
- Supports standard aspect ratio conversions plus all user-definable
- Supports all necessary color space conversions (ITU rec. 601 to ITU rec.709) for fill channel
- Full video processing functions, GBR gain YCrCb gain and offset and hue adjustment for fill channel
- Reference input allows for phasing of output video
- Module supports min. delay or variable delay for video output with out reference
- Module supports video output referenced to genlock with variable delay
- Output on-screen display used (OSD) to configure the operation of the device
- VistaLINK® capable for remote monitoring and control via SNMP (using VistaLINK® PRO, 9000NCP2 or 9000NCP Network Control Panel) when installed in 7700FR-C frame with 7700FC VistaLINK® Frame Controller

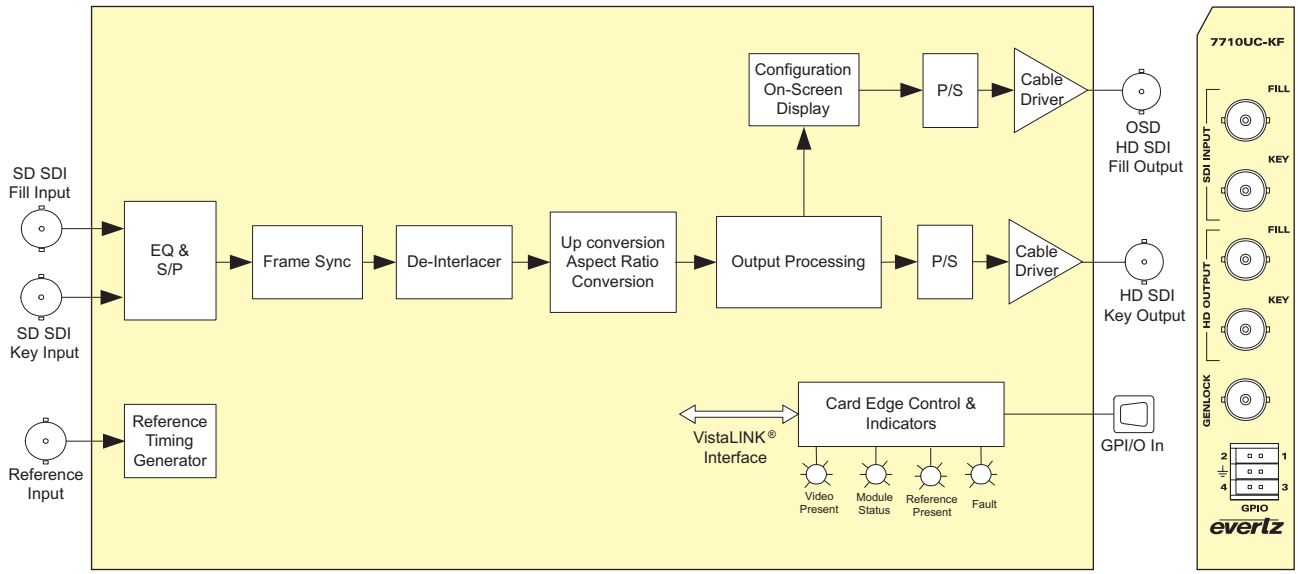

Specifications

Standards:
Number of Inputs: 270Mb/s SMPTE 259M
Connector: 1 Key, 1 Fill
Input Equalization: BNC per IEC 60169-8 Amendment 2
Return Loss: Automatic to 300m @ 270Mb/s with Belden 8281 or equivalent cable
> 15dB up to 540Mb/s

Serial Digital Outputs:
Standard: 1.485Gb/s SMPTE 292M
Number of Outputs: 1 Key, 1 Fill
Connector: BNC per IEC 60169-8 Amendment 2
Signal Level: 800mV nominal
DC Offset: 0V ±0.5V
Rise and Fall Time: 200ps nominal
Overshoot: < 10% of amplitude
Return Loss: > 15dB at 1.5GHz

Genlock Input:
Type: HD Tri-Level sync, NTSC or PAL Color Black 1V p-p
Connector: BNC per IEC 60169-8 Amendment 2
Termination: 75Ω (jumper selectable)

General Purpose Inputs and Outputs:
Number: 4 (configurable as inputs or outputs)
Type: Opto-isolated, active low with internal pull-ups to +5 or +12V (jumper settable)
Connector: 6-pin removable terminal block
Signal Level: Closure to ground
Function:
Inputs: 1 fill, 1 key
Outputs: 1 fill, 1 key

Electrical:
Voltage: +12V DC
Power: 20W
EMI/RFI: Complies with FCC Part 15, Class A EU EMC Directive

Physical:
Number of slots:
7700 frame mounting:2
7701 frame mounting:1

Ordering Information

7710UC-KF	HD Key/Fill Upconverter
Ordering Options	Rear Plate must be specified at time of order Eg. Model +3RU

Accessories
Rear Plate Suffix

+3RU	3RU Rear Plate for use with 7700FR-C Multiframe
+1RU	1RU Rear Plate for use with 7701FR Multiframe
+SA	Standalone Enclosure Rear Plate
7700FC	VistaLINK® Frame Controller
9000NCP	1RU VistaLINK® General Purpose Network Control Panel
9000NCP2	2RU VistaLINK® General Purpose Network Control Panel

Enclosures

7700FR-C	3RU Multiframe which holds up to 15 single slot modules
7701FR	1RU Multiframe which holds up to 3 single or dual slot modules
S7701FR	Standalone enclosure

The 7710NR-HD Noise Reducer with Image Enhancement provides high quality and cost effective noise reduction for HD video signals. The 7710NR-HD is ideal for use in television production facilities, mobile broadcast vehicles, production and post-production facilities.

The 7710NR-HD allows the user to remove random Gaussian noise, impulsive noise, and other temporal varying artifacts.

The 7710NR-HD uses proprietary noise reduction processing that consists of five distinct filters and a complex motion adaptive algorithm to combine and control the filtered results based on two motion sensors.

The 7710NR-HD also provides user-adjustable image enhancements to sharpen image details.

Features & Benefits

- One 1.5Gb/s HD input (per SMPTE 292M)
- Full 10-bit I/O processing
- Gaussian, impulsive and temporal artifact noise reduction
- Image enhancements - user-adjustable
- User presets to store noise reducer and image enhancement settings
- Split-screen comparison mode
- Transparent handlings of embedded audio, VANC data, and closed captioning
- On-screen display for card configuration
- Card edge control and LEDs for video and audio presence and module status
- VistaLINK® - capable for remote monitoring and control via SNMP (using VistaLINK® PRO) when installed in 7700FR-C frame with 7700FC VistaLINK® Frame Controller

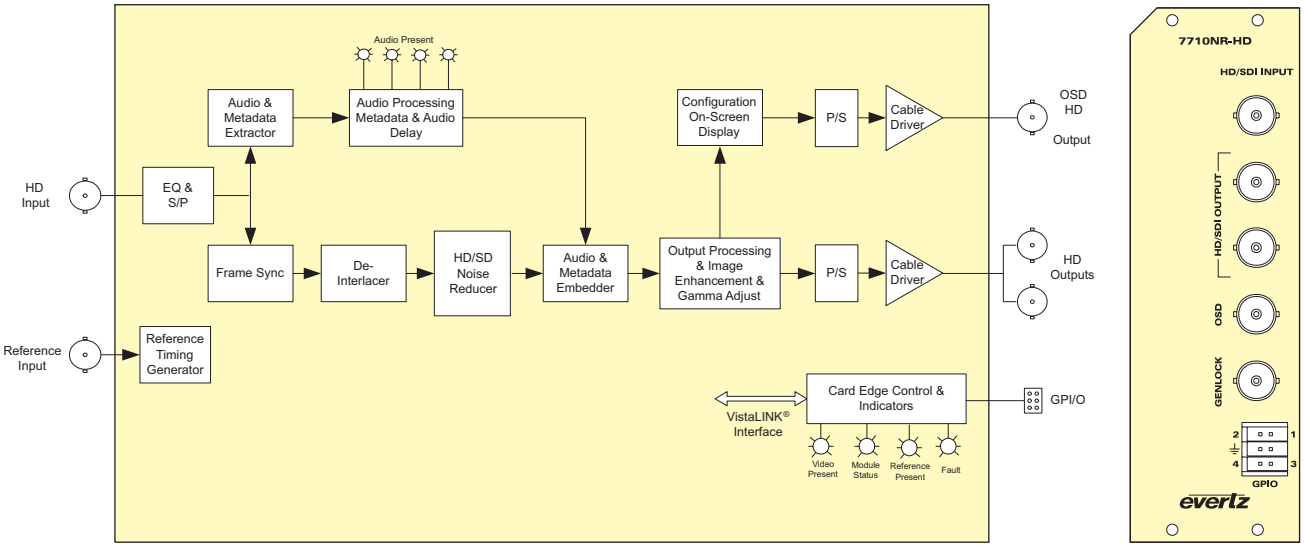

Specifications

Serial Video Input:

Standard:	SMPTE 292M 1.485Gb/s , auto detects standard
Connector:	1 BNC per IEC 60169-8 Amendment 2
Input Equalization:	Automatic to 100m @ 1.5Gb/s with Belden 1694A or equivalent cable

On-Screen Display Video Output:

Standard:	Same as input
Number of outputs:	1 per module
Connector:	1 BNC per IEC 60169-8 Amendment 2
Signal Level:	800mV nominal
DC Offset:	0V +0.5V

Noise Reduced Video Outputs:

Standard:	Same as input
Number of outputs:	2 per module
Connector:	1 BNC per IEC 60169-8 Amendment 2
Signal Level:	800mV nominal
DC Offset:	0V +0.5V

General Purpose Inputs and Outputs:

Number of inputs:	4 per module (configurable as inputs or outputs)
Standard:	Opto-isolated, active low with internal pull-ups to +5V or +12V (jumper settable)
Connector:	6-pin removable terminal block
Signal Level:	Closure to ground
Function Inputs:	User presets for noise reducer and image enhancement settings

Electrical:

Voltage:	+12V DC
Power:	25W
EMI/RFI:	Complies with FCC Part 15, Class A EU EMC Directive

Physical:

Number of slots:	
7700 frame mounting:	2
7701 frame mounting:	1

Ordering Information

7710NR-HD	HD Noise Reducer with Image Enhancement

Ordering Options Rear Plate must be specified at time of order
Eg. Model +3RU

Rear Plate Suffix

+3RU	3RU rear plate for use with 7700FR-C Multiframe
+1RU	1RU rear plate for use with 7701FR Multiframe

Enclosures

7700FR-C	3RU Multiframe which holds up to 15 single slot modules
7701FR	1RU Multiframe which holds up to 3 single or dual slot modules

7710XC-HD, 7710XC-AES4-HD

HD Cross Converter with VANC and Embedded Audio Support

The 7710XC-HD High Definition Format Translator/Cross Converter provides high quality conversion of your high definition (SMPTE 292M) signals to other common 1.5Gb/s high definition (SMPTE 292M) video formats. The 7710XC-HD has 10-bit processing, and 2 HD Serial Digital outputs and 1 OSD output, plus external genlock.

The 7710XC-AES4-HD accepts 2 groups of SMPTE 299M embedded audio on the input or external AES audio and re-embeds them into the serial video output and provides 4 AES audio output mirroring the embedder. The re-embedded audio is compliant to SMPTE 299M with delay adjust and has the appropriate delay added to compensate for video delay incurred by the conversion process. The audio is also available as 4 unbalanced AES outputs.

The units also transport the closed caption and time code information from input to output performing all necessary HD to HD translations and time code recalculations. All 7710XC-HD series modules occupy two card slots in the 3RU frame, which will hold up to 15 modules. The modules are also available for the 1RU frame, which will hold up to three modules. The units also provide card edge LEDs to indicate signal present, genlock present and audio groups present.

Features & Benefits

- High quality HD to HD cross conversion
- Support all necessary color space conversions (ITU rec. 601 to ITU rec. 709)
- Full video proc functions, GBR gain YCrCb gain and offset, hue adjustment and RGB color limiter
- Reference input allows for phasing of output video
- Module supports min. delay or variable delay for video output without reference
- Module supports video output referenced to genlock with variable delay
- Output on-screen display used to configure the operating modes
- De-embeds Audio from HD video input and embeds into HD video output (2 groups)
- Supports re-timed external 4 AES inputs and outputs (7710XC-AES4-HD only)
- Moves RP-188 VITC and LTC from HD input to HD output, recalculated for frame rate changes
- Moves HD closed captions from HD input to HD output
- VistaLINK® capable offering remote control and configuration capabilities via SNMP using VistaLINK® PRO, 9000NCP or 9000NCP2 Network Control Panel
- VistaLINK® is available when modules are used with the 3RU 7700FR-C frame and a 7700FC VistaLINK® Frame Controller

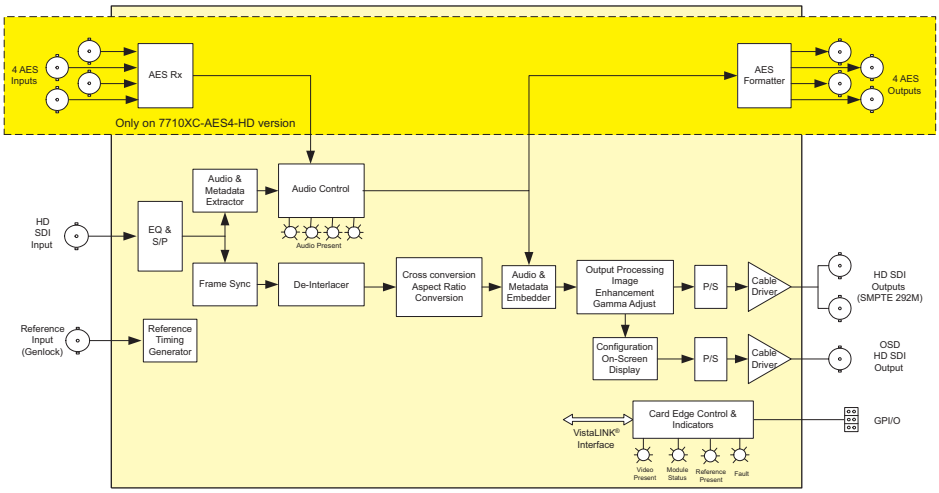

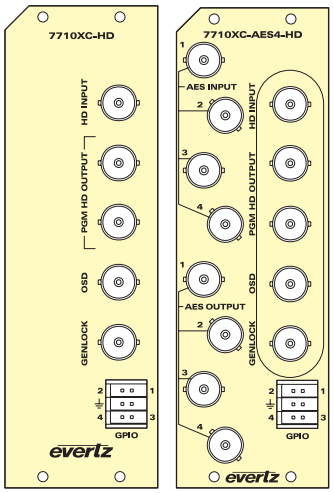

Specifications

HD-SDI Video Inputs:

Standard:	1.485Gb/s SMPTE 292M - menu selectable SMPTE 260M, SMPTE 274M, SMPTE 296M, SMPTE 349M
Number of Inputs:	1
Connector:	BNC per IEC 60169-8 Amendment 2
Input Equalization:	Automatic to 100m @ 1.5Gb/s with Belden 1694A or equivalent cable
Return Loss:	> 10dB up to 1.5Gb/s

HD-SDI Serial Video Outputs:

Standard:	1.5Gb/s SMPTE 292M
Number of Outputs:	3 Per Card
Connector:	BNC per IEC 60169-8 Amendment 2
Signal Level:	800mV nominal
DC Offset:	0V ±0.5V
Rise and Fall Time:	200ps nominal
Overshoot:	< 10% of amplitude
Return Loss:	> 10dB at 1.5GHz

AES Audio Inputs (-AES4 version only):

Number of Inputs:	4
Standard:	SMPTE 276M, single ended synchronous or asynchronous AES
Connector:	BNC per IEC 60169-8 Amendment 2
Resolution:	24 bits
Sampling Rate:	48kHz
Impedance:	75Ω
Signal Level:	1V p-p nominal

AES Audio Output (-AES4 version only):

Number of Outputs:	4
Standard:	SMPTE 276M, single-ended synchronous AES
Connectors:	BNC per IEC 60169-8 Amendment 2
Resolution:	24 bits
Sampling Rate:	48kHz
Impedance:	75Ω
Signal Level:	1V p-p nominal

General Purpose Inputs and Outputs:

Number:	4 (configurable as inputs or outputs)
Type:	Opto-isolated, active low with internal pull-ups to +5 or +12V (jumper settable)
Connector:	6-pin removable terminal block
Signal Level:	Closure to ground

Function:

Inputs:	User Preset select, fade or cut for keyer, fade to black
Outputs:	Tally (key on air)

Genlock Input:

Type:	HD Tri-Level sync, NTSC or PAL Color Black 1V p-p
Connector:	BNC per IEC 60169-8 Amendment 2
Termination:	75Ω (jumper selectable)

Electrical:

Voltage:	+12V DC
Power:	26W
EMI/RFI:	Complies with FCC Part 15, Class A EU EMC Directive

Physical:

Number of slots:
7700 frame mounting: 2
7701 frame mounting: 1

Ordering Information

7710XC-HD	HD Cross Converter with VANC and Embedded Audio support
7710XC-AES4-HD	HD Cross Converter with VANC, Embedded Audio and discrete AES support

Ordering Options Rear Plate must be specified at time of order
Eg: Model +3RU

Rear Plate Suffix

+3RU	3RU rear plate for use with 7700FR-C Multiframe
+1RU	1RU rear plate for use with 7701FR Multiframe

Enclosures

7700FR-C	3RU Multiframe which holds up to 15 single slot modules
7701FR	1RU Multiframe which holds up to 3 single or dual slot modules

7710XUC-HD, 7710XUC-AES4-HD, 7710XUDC-AES4-HD

HD Up / Down / Cross Converters (with Optional External AES)

The 7710XUC-HD and 7710XUC-AES4-HD High Definition Format Up/Cross Converters provide high quality up-conversion of your standard definition signals with noise reduction or high quality HD to HD cross-conversions. The modules also do high definition to standard definition down-conversion with detail enhancement and gamma correction. Evertz proprietary noise reduction and detail enhancements technologies ensure superior image quality whether up-converting, cross converting or down-converting.

The 7710XUDC-AES4-HD High Definition Format Up/Down/Cross Converter is similar to the 7710XUC-HD but provides simultaneous cross and down-conversion.

All the modules accept 2 groups of embedded audio on the input and re-embed them into the serial video outputs. The "-AES4" versions also accept 4 external discrete unbalanced AES inputs and provide 4 AES outputs with the same audio that is being embedded.

In the case of the 7710XUDC-AES4-HD, the 4 AES outputs with the same audio are embedded on the output SD video signals, since they share one common audio processor. The 7710XUC-AES4-HD has a separate audio processor for the 4 AES outputs.

The re-embedded audio normally has the appropriate delay added to compensate for video delay incurred by the conversion process. An additional audio delay adjustment can also be made for lip sync correction.

The units also transfer the closed caption and time code information from input to output performing all necessary HD to SD and SD to HD translation and time code recalculations.

Features & Benefits

- High quality HD to HD cross conversion
- High quality SD to HD upconversion with Noise Reduction
- High quality HD to SD downconversion (simultaneous cross and down conversion with 7710XUDC-AES4-HD)
- Image Enhancement for HD and SD
- Supports standard aspect ratio conversions plus all user definable
- Support all necessary color space conversions (ITU rec. 601 to ITU rec. 709) and SMPTE 240M (for 1035i)
- Full video processing functions: RGB gain, YCrCb gain and offset, hue adjustment, RGB gamma correction, and RGB color limited
- Reference input allows for phasing of output video
- Supports video output referenced to genlock with variable delay
- Minimum delay or variable delay for video output without reference
- Output on screen display (OSD) for configuration
- De-embeds Audio from video input and embeds into video output (2 groups)
- Supports external 4 AES inputs and outputs (-AES4 versions)
- Moves VITC time code and Line 21 captions from the SD video into the HD video ancillary data
- Moves RP-188 VITC and LTC from HD input to HD output, recalculated for frame rate changes
- Moves HD closed captions from HD input to HD output

7710XUC-HD

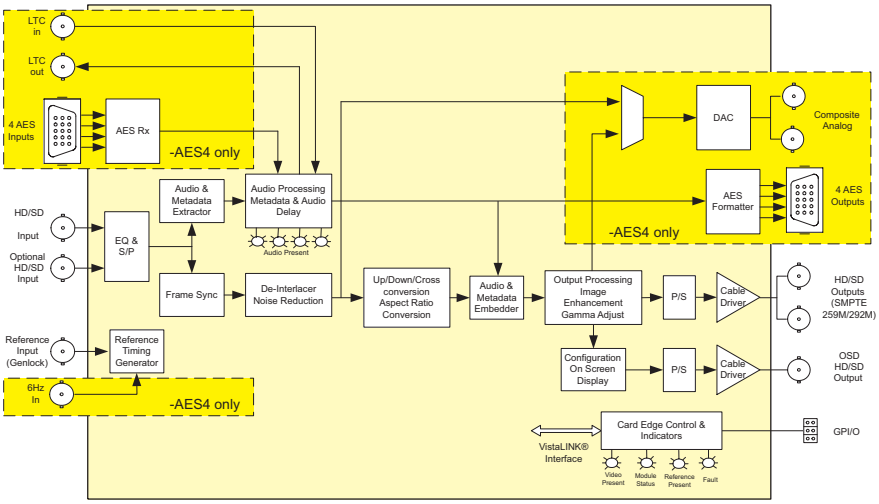

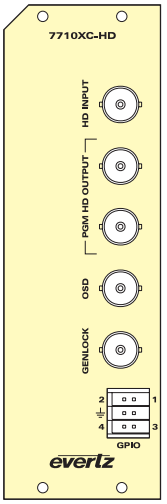

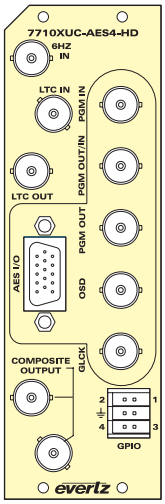

7710XUDC-AES4-HD

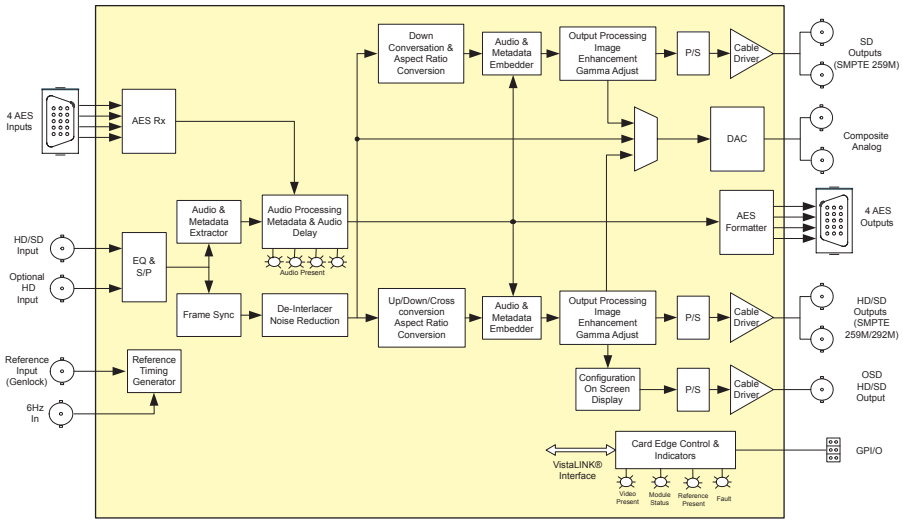

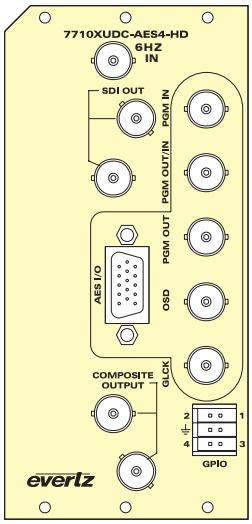

7710XUC-HD, 7710XUC-AES4-HD, 7710XUDC-AES4-HD

HD Up / Down / Cross Converters (with Optional External AES)

MODEL #	Input	Outputs		Conversion
		PGM	OSD	
7710XUC-HD *HD Format Up/Cross Converter*	HD	2 HD	1 HD	1080 ⇔ 720
		2 SD	1 SD	1080/720 ⇒ 525/625
	SD	2 HD	1 HD	525/625 ⇒ 1080/720
		2 SD	1 SD	525/625 ⇔ 525/625 (ARC)
7710XUC-AES4-HD *HD Format Up/Down/Cross Converter with external AES*	HD	2 HD	1 HD	1080 ⇔ 720
		2 SD	1 SD	1080/720 ⇒ 525/625
	SD	2 HD	1 HD	525/625 ⇒ 1080/720
		2 SD	1 SD	525/625 ⇔ 525/625 (ARC)
7710XUDC-AES4-HD *HD Format Up/Down/Cross Converter with external AES*	HD	2 HD & 2 SD & 2 NTSC/PAL	1 HD	1080 ⇔ 720 & 1080/720 ⇒ 525/625
	SD	2 HD & 2 SD & 2 NTSC/PAL	1 HD	525/625 ⇔ 525/625 (ARC) & 525/625 ⇒ 1080/720

Specifications

Serial Digital Video Inputs:
Standards: 270Mb/s SMPTE 259M or 1.485Gb/s SMPTE 292M - menu selectable SMPTE 260M, SMPTE 274M SMPTE 296M, SMPTE 349M
Number of Inputs: 1 or 2 (optional based on PGM IN/OUT configuration)
Connector: BNC per IEC 60169-8 Amendment 2
Input Equalization: Automatic to 100m @ 1.5Gb/s with Belden 1694A or equivalent cable
Return Loss:
SD: > 15dB up to 540Mb/s
HD: > 15dB up to 1.5Gb/s

Serial Digital Video Outputs:
Standard: SMPTE 259M 270Mb/s or SMPTE 292M 1.485Gb/s
Number of Outputs: 3 Per Card (or 2 based on PGM IN/OUT configuration)
2 Per Card SD Only (7710XUDC-AES4-HD only)
Connector: BNC per IEC 60169-8 Amendment 2
Signal Level: 800mV nominal
DC Offset: 0V ±0.5V
Rise and Fall Time:
SD: 740ps nominal
HD: 200ps nominal
Overshoot: < 10% of amplitude
Return Loss:
SD: > 15dB at 540MHz
HD: > 15dB at 1.5GHz

AES Audio Inputs (-AES4 models):
Number of Inputs: 4
Standard: SMPTE 276M, single-ended synchronous or asynchronous AES
Connector: DB15
Resolution: 24 bits
Sampling Rate: 48kHz
Impedance: 75Ω
Signal Level: 1V p-p nominal

AES Audio Output (-AES4 models):
Number of Outputs: 4
Standard: SMPTE 276M, single-ended synchronous AES
Connectors: DB15
Resolution: 24 bits
Sampling Rate: 48kHz
Impedance: 75Ω
Signal Level: 1V p-p nominal

General Purpose Inputs and Outputs:
Number: 4 (configurable as inputs or outputs)
Type: Opto-isolated, active low with internal pull-ups to +5 or +12V (jumper settable)
Connector: 6-pin removable terminal block
Signal Level: Closure to ground

Genlock Input:
Type: HD Tri-Level sync, NTSC or PAL Color Black 1V p-p
Connector: BNC per IEC 60169-8 Amendment 2
Termination: 75Ω (jumper selectable)

6Hz INPUT:
Standard: 6Hz TTL Pulse
Number of Inputs: 1 (only on "-AES4" versions)
Connector: BNC per IEC 60169-8 Amendment 2
Termination: 75Ω (jumper selectable)

LTC Input:
Standard: SMPTE 12M
Number of Inputs: 1 (7710XUC-AES4-HD only)
Connector: BNC per IEC 60169-8 Amendment 2
Termination: 75Ω (jumper selectable)

LTC Output:
Standard: SMPTE 12M
Number of Inputs: 1 (7710XUC-AES4-HD only)
Connector: BNC per IEC 60169-8 Amendment 2
Termination: 75Ω (jumper selectable)

Electrical:
Voltage: +12V DC
Power: 26W (7710XUC-HD & 7710XUC-AES4-HD)
35W (7710XUDC-AES4-HD)
EMI/RFI: Complies with FCC Part 15, Class A EU EMC Directive

Physical:
Number of slots:
7700 frame mounting: 2 (7710XUC-HD & 7710XUC-AES4-HD)
3 (7710XUDC-AES4-HD)
7701 frame mounting: 1 (7710XUC-HD & 7710XUC-AES4-HD only)

Ordering Information

7710XUC-HD HD Format Up/Cross Converter
7710XUC-AES4-HD HD Format Up/Down/Cross Converter with external AES
7710XUDC-AES4-HD
HD Format Up/Down/Cross Converter with external AES

Ordering Options Rear Plate must be specified at time of order
Eg: Model +3RU

Rear Plate Suffix
+3RU 3RU rear plate for use with 7700FR-C Multiframe
Note: (Only for the 7710XUC-HD & 7710XUC-AES4-HD)
+1RU 1RU rear plate for use with 7701FR Multiframe

Accessories
WPAES8-BNCM-6F Cable (included)

Enclosures
7700FR-C 3RU Multiframe which holds up to 15 single slot modules
7701FR 1RU Multiframe which holds up to 3 single or dual slot modules

7711UC-HD & 7711UC-AES4-HD

HD Format Upconverter

The 7711UC-HD series of High Definition Format Up Converters deliver high quality up-conversion of SDTV to HDTV signals. The 7711UC-HD incorporates a 10 bit signal path and integrates Evertz proprietary detail enhancement and 3D pixel adaptive noise reduction technologies. RGB gain/YCbCr gain and offset controls and RGB color limiting/legalization functions are also available

The 771UC-HD and the 7711UC-AES4-HD support multi-format SD/HD serial digital inputs and generate two HD serial digital outputs (1 with OSD overlays for card configuration). Inputs are auto-sensing and will "glitchlessly" switch between up-converting SD signals and passing through HD signals. An additional bi-directional BNC can be configured to supply an extra program input or an extra copy of the program output. With +F option, this extra BNC is used as a dedicated input BNC for FILL signals. Signals supplied to the FILL input can be keyed into the un-used portions of the output image raster (ie. side panels typically generated when converting 4:3 to 16:9). FILL inputs signal must be the same format as the target output video format and must be advanced relative to output video timing (< than 1 line).

These modules can accept 2 groups of SMPTE 272M embedded audio on the input and re-embed them into the serial video output (audio delay tracks video delay). The 7711UC-HD and the 7711UC-AES4-HD transport closed caption and time code information from input to output with all necessary SD to HD translation and time code recalculations taking place.

The -AES4 version also accepts 4 external discrete unbalanced AES inputs and provides 4 AES outputs with the same audio that is being embedded. The 7711UC-AES4-HD has a separate audio processor for the 4 AES outputs.

Features & Benefits

- High quality SD to HD up conversion
- Evertz proprietary Noise Reduction and Image Enhancement
- Supports standard and user defined aspect ratio conversions
- Auto sensing SD/HD input with glitch-free output switching
- Optional FILL input signal for keying into un-used portions of output image raster (+F option)
- Supports all required color space conversions (rec. 601 to 709)
- Full video proc functions,for GBR gain, YCrCb gain/offset/hue
- RGB color limiter/legalizer
- Reference input allows for phasing of output video
- Min. delay or variable delay for video output without reference
- Supports external 4 AES inputs and outputs (-AES4 version only)
- Output on screen display used to configure the operating modes
- De-embeds 2 groups of audio from video input and embeds into video output with audio delay tracking video delay
- Moves VITC time code and Line 21 captions from the SD video into the HD video ancillary data
- VistaLINK® - capable offering remote control and configuration capabilities via SNMP using VistaLINK® PRO, 9000NCP or 9000NCP2 Network Control Panel. VistaLINK® is available when modules are used with the 3RU 7700FR-C frame and a 7700FC VistaLINK® Frame Controller

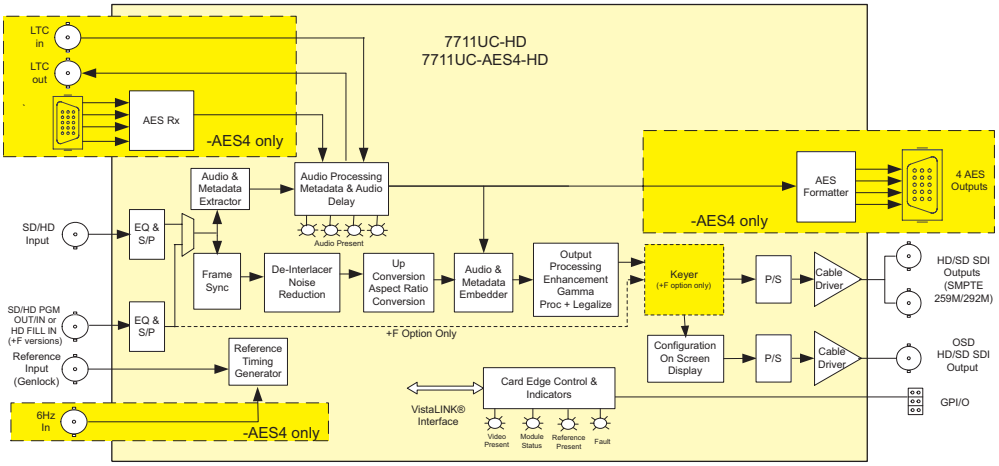

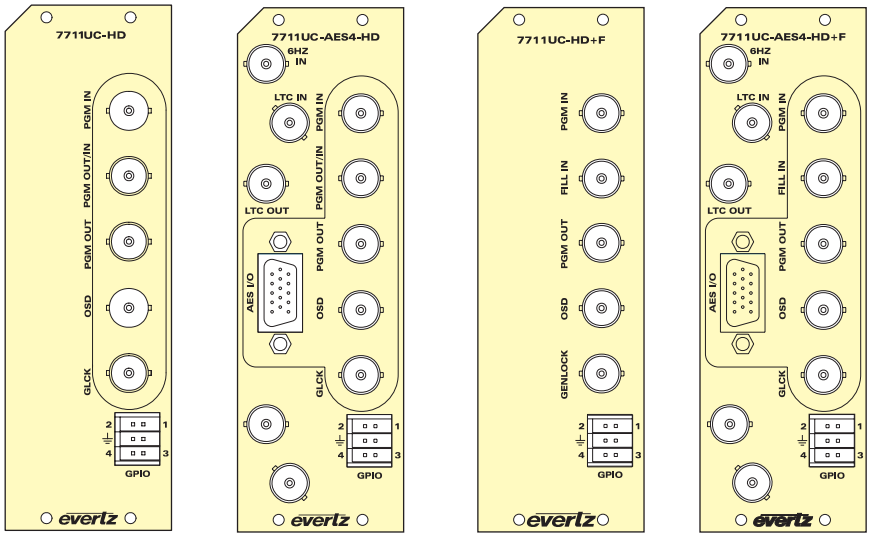

Specifications

Serial Digital Video Inputs:
Standards: 270Mb/s SMPTE 259M, menu selectable orauto detect SMPTE 260M, SMPTE 274M
Number of Inputs: 1 or 2 (optional based on PGM IN/OUT configuration)
Connector: BNC per IEC 60169-8 Amendment 2
Input Equalization: Automatic to 300m @ 270Mb/s with Belden 1694 or equivalent cable
Return Loss:
SD Standards: >15dB up to 270Mhz

Serial Digital Video Outputs:
Standard: 270Mb/s SMPTE 259M or 1.485Gb/s SMPTE 292M
Number of Outputs: 3 Per Card (or 2 based on PGM IN/OUT configuration)
Connector: BNC per IEC 60169-8 Amendment 2
Signal Level: 800mV nominal
DC Offset: 0V ±0.5V
Rise and Fall Time:
SD Standards: 740ps nominal
HD Standards: 200ps nominal
Overshoot: < 10% of amplitude
Return Loss:
HD Standards: > 10dB at 1.5GHz

Genlock Input:
Type: HD Tri-Level sync, NTSC or PAL Colour Black 1V p-p
Connector: BNC per IEC 60169-8 Amendment 2
Termination: 75Ω (jumper selectable)

6Hz Input:
Standard: 6Hz TTL Pulse
Number of Inputs: 1 (7711UC-AES4-HD only)
Connector: BNC per IEC 60169-8 Amendment 2
Termination: 75Ω (jumper selectable)

LTC Input:
Standard: SMPTE 12M
Number of Inputs: 1 (7711UC-AES4-HD only)
Connector: BNC per IEC 60169-8 Amendment 2
Termination: 75Ω (jumper selectable)

LTC Output:
Standard: SMPTE 12M
Number of Inputs: 1 (7711UC-AES4-HD only)
Connector: BNC per IEC 60169-8 Amendment 2
Termination: 75Ω (jumper selectable)

AES Audio Inputs:
Number of Inputs: 4 (only on "-AES4" version)
Standard: SMPTE 276M, single ended synchronous or asynchronous AES
Connectors: DB15
Resolution: 24 bits
Sampling Rate: 48kHz
Impedance: 75Ω
Signal Level: 1V p-p nominal

AES Audio Outputs:
Number of Outputs: 4 (only on "-AES4" version)
Standard: SMPTE 276M, single ended synchronous AES
Connectors: DB15
Resolution: 24 bits
Sampling Rate: 48kHz
Impedance: 75Ω
Signal Level: 1V p-p nominal

General Purpose Inputs and Outputs:
Number: 4 (configurable as inputs or outputs)
Type: Opto-isolated, active low with internal pull-ups to +5 or +12V (jumper settable)
Connector: 6-pin removable terminal block
Signal Level: closure to ground
Function:
Inputs: User Preset select
Outputs:

Electrical:
Voltage: +12V DC
Power: 25W (7711UC-HD and 7711UC-AES4-HD)
EMI/RFI: Complies with FCC regulations for class A devices
Complies with EU EMC directive

Physical:
Number of slots:
7700 frame mounting:
2 (7711UC-HD and 7711UC-AES4-HD)
7701 frame mounting:
1 (7711UC-HD and 7711UC-AES4-HD)

Ordering Information

7711UC-HD	HD Upconverter (with Noise Reduction and Image Enhancement)
7711UC-AES4-HD	HD Upconverter (with Noise Reduction and Image Enhancement) and external AES

Ordering Options Rear Plate must be specified at time of order
Eg: Model +3RU

+F Fill Input Option

Rear Plate Suffix
+3RU 3RU rear plate for use with 7700FR-C Multiframe
+1RU 1RU rear plate for use with 7701FR Multiframe

Enclosures
7700FR-C 3RU Multiframe which holds up to 15 single slot modules
7701FR 1RU Multiframe which holds up to 3 single or dual slot modules

7713HDC

Downconverter & Distribution Amplifier

The 7713HDC is a reclocking high definition serial digital video distribution amplifier and high quality downconverter for 1.5Gb/s HDTV signals. It incorporates Evertz proprietary detail enhancement algorithms and gamma correction. It can also function as a monitoring distribution amplifier for standard definition 270Mb/s signals. The 7713HDC provides 4 reclocked DA outputs and 3 downconverted SDI or composite analog NTSC/PAL outputs (selectable).

The 7713HDC accepts all the popular international SMPTE 292M video formats. When the 7713HDC downconverts 1080p/23.98sF input video to 525i/59.94 with an embedded 3:2 pulldown sequence, the 3:2 pulldown cadence can be free running or locked to embedded RP188 time code or an external 6Hz input.

The 7713HDC also de-embeds two groups of audio and re-embeds the audio on the SDI output in time with the video. It can also reassign audio channels within the groups. All parameters may be controlled by use of the on-screen display menu or through VistaLINK® PRO. The re-embedded audio has the appropriate delay added to compensate for video delay incurred by the conversion process, thus avoiding the need for external de-embedding and re-embedding of audio. An additional audio delay adjustment can also be made for lip sync correction.

The 7713HDC has color space conversion from ITU rec. 709 to ITU rec. 601, and will provide various downconverted formats such as 16:9 letterbox, 14:9 letterbox, 13:9 letterbox, 4:3 center crop, and 4:3 anamorphic squeeze. The 7713HDC supports Widescreen Signaling (WSS) on the output to handle various aspect ratios of program material. It also provides on-screen 4:3 aspect ratio markers (or indicators).

The module also transfers the closed caption and timecode information from input to output performing all necessary HD to SD translation and time code recalculations.

The 7713HDC provides card edge LEDs to indicate signal present and audio groups present. The 7713HDC occupies one card slot in the 3RU frame which will hold up to 15 modules, the 1RU frame which will hold up to three modules or as a standalone.

Features & Benefits

- High quality HD ⇨ SD down conversions
- Evertz proprietary detail enhancement algorithms
- Supports standard aspect ratio conversions plus user-defined modes
- Supports most international standards including 1080i/60, 1080i/59.94, 1080i/50, 1080p/24, 1080p/23.98, 1080p/24sF, 1080p/23.98sF, 720p/60, 720p/59.94, 720p/50, 480p/60 and 480p/59.94
- Will also accept 270Mb/s SD input per SMPTE 259M in a pass through mode - auto senses HD or SD input
- Supports all necessary colour space conversions (ITU rec. 601 to ITU rec.709)
- Full video processing functions gamma correction, GBR gain YCrCb gain and offset, hue adjustment and RGB colour limiter
- Reference input from card or 7700FR-G Frame reference allows for phasing of output video
- Line buffer on input to allow clean switching between genlocked video sources that have a phase offset of ±1/4 line
- 1080p/23.98sF conversion to 525i/59.94 with 3:2 pulldown sequence - time code or 6Hz reference
- Output on-screen display used to configure the operating modes
- On-screen 4:3 aspect ratio marker
- De-embeds audio from HD video input and embeds into SD video output (2 groups)
- Moves RP-188 VITC and LTC from HD input to SD output, recalculated for frame rate change
- Support for widescreen signalling (WSS) on output
- Card Edge LEDs for signal presence, genlock presence, equalization warning, audio groups present and module status
- VistaLINK® - capable offering remote control and configuration capabilities via SNMP (using VistaLINK® PRO, 9000NCP or 9000NCP2 Network Control Panel) is available when modules are used with the 3RU 7700FR-C frame and a 7700FC VistaLINK® Frame Controller

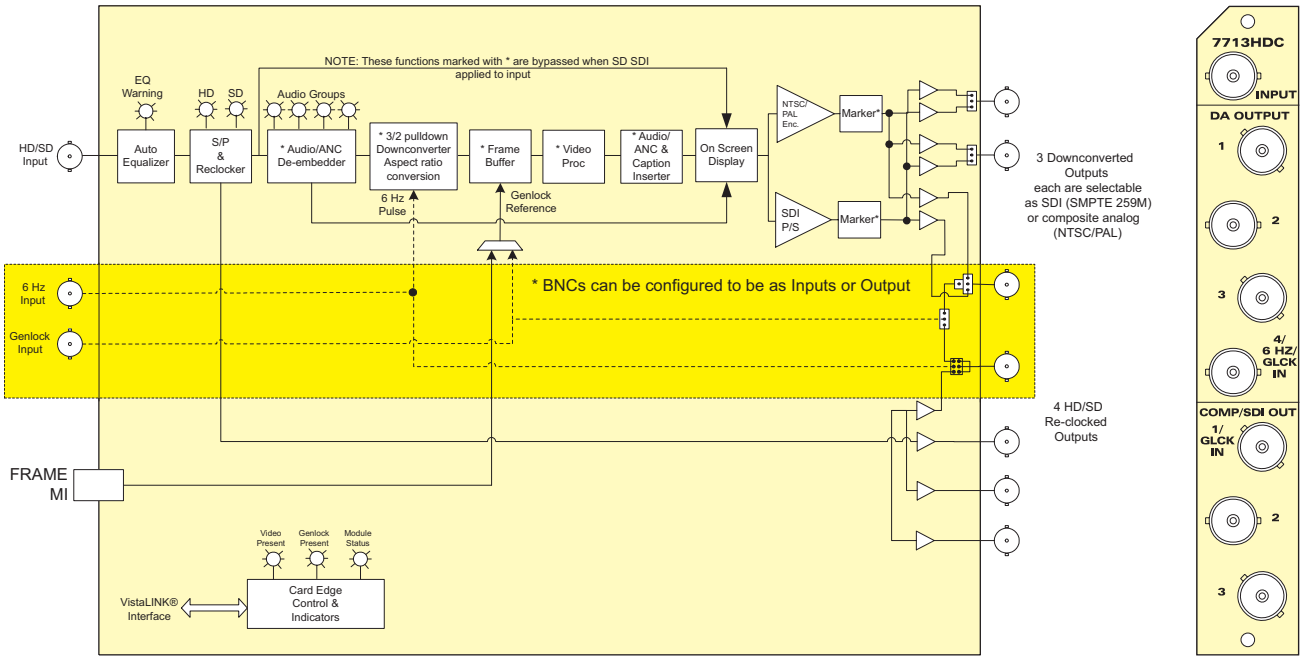

Specifications

Serial Video Input:

Standard:	270Mb/s SMPTE 259M - pass through mode 1.485Gb/s SMPTE 292M - auto-detects standard SMPTE 260M, SMPTE 274M, SMPTE 296M, SMPTE 349M
Connector:	BNC per IEC 60169-8 Amendment 2
Input Equalization:	Automatic to 100m @ 1.5Gb/s with Belden 1694A or equivalent cable
Return Loss:	> 15dB up to 1.5GHz

Reclocked Serial Video DA Outputs:

Standard:	Same as input
Number of Outputs:	4 reclocked
Connector:	BNC per IEC 60169-8 Amendment 2
Signal Level:	800mV nominal
DC Offset:	0V ±0.5V
Rise and Fall Time:	200ps nominal for HD 750ps nominal for SD
Overshoot:	< 10% of amplitude
Return Loss:	> 15dB at 1.5Gb/s
Jitter:	< 0.2 UI

Downconverted Serial Video Outputs:

Standard:	SMPTE 259M-C (270Mb/s)
Number of Outputs:	Up to 3 Per Card (jumper selectable)
Connector:	BNC per IEC 60169-8 Amendment 2
Signal Level:	800mV nominal
DC Offset:	0V ±0.5V
Rise and Fall Time:	750ps nominal
Overshoot:	< 10% of amplitude
Return Loss:	> 15dB at 270Mb/s
Jitter:	< 0.2 UI

Downconverted Composite Analog Video Outputs:

Standards:	Analog composite NTSC (SMPTE 170M) or Analog composite PAL (ITU-R BT.470)
Number of Outputs:	Up to 3 Per Card (jumper selectable)
Connectors:	BNC per IEC 60169-8 Amendment 2
Signal Level:	1V p-p nominal
DC Offset:	0V ±0.1V
Return Loss:	> 35dB up to 5MHz
Frequency Response:	0.2dB to 4MHz
Differential Phase:	< 0.5° (< 0.3° typical)
Differential Gain:	< 0.8% (< 0.5% typical)
SNR:	> 78dB to 5MHz (shallow ramp)
Impedance:	75Ω

Genlock Input:

Type:	NTSC or PAL Color Black 1V p-p
Connector:	BNC per IEC 60169-8 Amendment 2 or Frame Genlock on 7700FR-G frames (selectable)
Termination:	High impedance or internal 75Ω termination (jumper selectable)

6HZ Input:

Type:	TTL level active high pulse 1/30 second wide
Connector:	BNC per IEC 60169-8 Amendment 2 (jumper selectable)
Termination:	500Ω

Input to Output Processing Delay (HD Input Video):

Video Delay:	Approximately 1 to 2 frames depending on input video format, processing mode and phase setting
Audio Delay:	Audio is delayed and re-embedded in time with the output picture

Electrical:

Voltage:	+12V DC
Power:	10W
EMI/RFI:	Complies with FCC Part 15, Class A EU EMC Directive

Physical:

Number of slots:	1

Ordering Information

7713HDC	High Quality Downconverter with Image Enhancement
Ordering Options	Rear Plate must be specified at time of order Eg. Model +3RU +SC

Rear Plate Suffix

+3RU	3RU Rear Plate for use with 7700FR-C Multiframe
+1RU	1RU Rear Plate for use with 7701FR Multiframe
+SA	Standalone Enclosure Rear Plate

Accessories

7700FC	VistaLINK® Frame Controller
9000NCP	1RU VistaLINK® General Purpose Network Control Panel
9000NCP2	2RU VistaLINK® General Purpose Network Control Panel

Enclosures

7700FR-C	3RU Multiframe which holds up to 15 single slot modules
7701FR	1RU Multiframe which holds up to 3 single or dual slot modules
S7701FR	Standalone enclosure

7714HDC

High Quality Downconverter

The 7714HDC High Quality downconverter provides high quality downconversion of your high definition (SMPTE 292M) signals to standard definition (SMPTE 259M) signals. The 7714HDC incorporates Evertz proprietary detail enhancement algorithms and gamma correction. The 7714HDC has up to 4 SD Serial Digital outputs or up to 2 composite analog video outputs. Of the 4 outputs, 2 have OSD output. The module supports low processing latency (down to 30 lines) for delay sensitive applications.

The 7714HDC has an external genlock input and allows for phasing of the output video. The 7714HDC accepts all the popular international SMPTE 292M video formats. When the 7714HDC downconverts 1080p/23.98sF input video to 525i/59.94 with an embedded 3:2 pulldown sequence, the 3:2 pulldown cadence can be free running or locked to embedded RP188 time code or an external 6Hz input.

The module accepts 2 groups of embedded audio on the input and re-embeds them into the serial video outputs. As a standard feature, the 7714HDC also accepts 4 discrete unbalanced AES inputs and provides 4 AES outputs with the same audio that is being embedded. It can also reassign audio channels within the groups.

The re-embedded audio has the appropriate delay added to compensate for video delay incurred by the conversion process, thus avoiding the need for external de-embedding and re-embedding of audio. An additional audio delay adjustment can also be made for lip sync correction.

The 7714HDC has color space conversion from ITU rec. 709 to ITU rec. 601, and will provide various downconverted formats such as 16:9 letterbox, 14:9 letterbox, 13:9 letterbox, 4:3 center crop, and 4:3 anamorphic squeeze. The 7714HDC supports Widescreen Signaling (WSS) on the output to handle various aspect ratios of program material.

The module also transfers the closed caption and time code information from input to output performing all necessary HD to SD translation and time code recalculations.

The 7714HDC provides card edge LEDs to indicate signal present and audio groups present. The 7714HDC occupies one card slot in the 3RU frame which will hold up to 15 modules, the 1RU frame which will hold up to three modules or as a standalone.

Features & Benefits

- High quality HD ⇨ SD down conversions
- Evertz proprietary detail enhancement algorithms
- Input frame synchronizer
- Reference input allows for phasing of output video
- Low latency for delay sensitive applications (down to 30 lines)
- Standard support for both embedded and discrete AES (4xAES)
- Supports standard aspect ratio conversions plus user defined modes
- Supports most international standards including 1080i/60, 1080i/59.94, 1080i/50, 1080p/24, 1080p/23.98, 1080p/24sF, 1080p/23.98sF, 720p/60, 720p/59.94, 720p/50, 480p/60 and 480p/59.94
- Will also accept 270Mb/s SD input per SMPTE 259M in a pass-through mode - auto senses HD or SD input
- Support all necessary colour space conversions (ITU rec. 601 to ITU rec.709)
- Full video processing functions gamma correction, GBR gain YCrCb gain and offset, hue adjustment and RGB colour limiter
- Line buffer on input to allow clean switching between genlocked video sources that have a phase offset of ±1/4 line
- 1080p/23.98sF conversion to 525i/59.94 with 3:2 pulldown sequence - time code or 6Hz reference
- Output on-screen display used to configure the operating modes
- De-embeds audio from HD video input and embeds into SD video output (2 groups)
- Supports 4 retimed external AES input and outputs
- Moves RP-188 VITC and LTC from HD input to SD output, recalculated for frame rate change
- Support for widescreen signalling (WSS) on output
- Card Edge LEDs for signal presence, genlock presence, equalization warning, audio groups present and module status
- VistaLINK® - capable offering remote control and configuration capabilities via SNMP (using VistaLINK® PRO, 9000NCP or 9000NCP2 Network Control Panel) is available when modules are used with the 3RU 7700FR-C frame and a 7700FC VistaLINK® Frame Controller

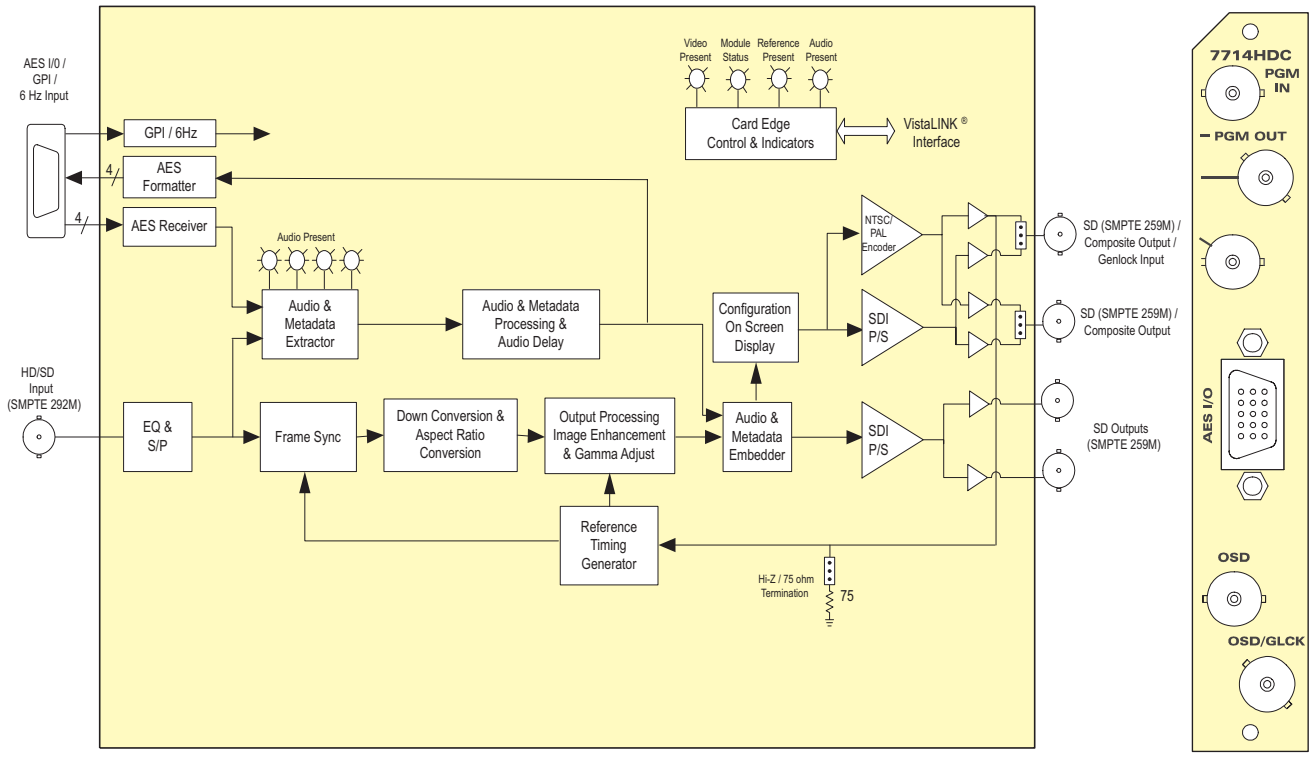

Specifications

Standard: 270Mb/sec SMPTE 259M or 1.485Gb/sec SMPTE 292M SMPTE 260M, SMPTE 274M, SMPTE 296M, SMPTE 349M
Number of Inputs: 1
Connector: BNC per IEC 60169-8 Amendment 2
Input Equalization: Automatic to 100m @ 1.5Gb/s with Belden 1694A or equivalent cable
Return Loss:
SD Standards: > 15dB up to 540Mb/s
HD Standards: > 15dB up to 1.5Gb/s

Downconverted Serial Video Outputs:
Standard: 270Mb/sec SMPTE 259M
Number of Outputs: 4 Per Card
Connector: BNC per IEC 60169-8 Amendment 2
Signal Level: 800mV nominal
DC Offset: 0V ±0.5V
Rise and Fall Time: 740ps nominal
Overshoot: < 10% of amplitude
Return Loss: > 15dB at 540MHz

Downconverted Composite Analog Video Outputs:
Standard: SMPTE 170M (NTSC), ITU-R BT470-6 (PAL)
Number of Outputs: 2
Connector: BNC per IEC 60169-8 Amendment 2
Signal Level: 1V nominal
Output Impedance: 75Ω
DC Offset: 0V ±50mV
Return Loss: > 45dB to 10MHz
Freq. Response: < ±0.1dB to 4MHz (response will depend on selected filtering)
Differential Phase: < 0.5° (< 0.3° typical)
Differential Gain: < 0.5% (< 0.3% typical)
SNR: > 75dB (black video, 100kHz to 5MHz)
Output level control range: ±10%
Black level control range: ±7.5 IRE
Chroma level control range: ±10%
Hue control range: ±15° (NTSC only)

Genlock Input:
Type: HD Tri-Level sync, NTSC or PAL Color Black 1V p-p
Connector: BNC per IEC 60169-8 Amendment 2
Termination: 75Ω (jumper selectable)

AES Audio Inputs & Outputs:
Number of Inputs: 4
Number of Outputs: 4
Standard: SMPTE 276M, single ended synchronous AES
Connectors: DB15 or BNC per IEC 60169-8 Amendment 2
Resolution: 24 bits
Sampling Rate: 48kHz
Impedance: 75Ω
Signal Level: 1V p-p nominal

Input to Output Processing Delay (HD Input Video):
Video Delay: < 1 frames depending on input video format, processing mode and phase setting (down to 30 lines)
Audio Delay: Audio is delayed and re-embedded in time with the output picture

Electrical:
Voltage: +12V DC
Power: 10W
EMI/RFI: Complies with FCC Part 15, Class A EU EMC Directive

Physical:
Number of slots: 1

Ordering Information

7714HDC	High Quality Downconverter with Image Enhancement, Low Latency & External AES

Ordering Options Rear Plate must be specified at time of order
Eg. Model +3RU +SC

Rear Plate Suffix

+3RU	3RU Rear Plate for use with 7700FR-C Multiframe
+1RU	1RU Rear Plate for use with 7701FR Multiframe
+SA	Standalone Enclosure Rear Plate

Accessories
WPAES8-BNCM-6F Cable (included)

7700FC	VistaLINK® Frame Controller
9000NCP	1RU VistaLINK® General Purpose Network Control Panel
9000NCP2	2RU VistaLINK® General Purpose Network Control Panel

Enclosures

7700FR-C	3RU Multiframe which holds up to 15 single slot modules
7701FR	1RU Multiframe which holds up to 3 single or dual slot modules
S7701FR	Standalone enclosure

7720ADC-A4

Quad Analog Audio to Dual AES Converter

The 7720ADC-A4 is a high-quality, 24-bit, analog to digital audio converter which provides digital conversion of 4 balanced analog audio channels and provides 2 unbalanced AES/EBU channels out.

The sampling clock may free run at 48kHz or may be locked to either a DARS (Digital Audio Reference Signal) reference or composite video reference. Level control is provided via a card edge toggle switch. The input gain level can be read out from a card edge display for convenience.

The full scale digital signal can be calibrated to accommodate peak levels ranging from 8dBu to 27dBu with 0.5dB resolution.

The audio ADC features a card edge VU meter for quick confidence monitoring. Four separate level indicators are provided via bargraphs for quick validation of audio program material.

Features & Benefits

- Auto detect composite video or DARS on the reference input
- 24-bit, high-quality analog to digital audio conversion
- Support for 4 channels of analog audio (2 AES/EBU)
- Local card edge display and control of input gain
- 0dBFS programmable from 8dBu to 27dBu
- A card edge display provides a 4 channel bargraph type level indicator display for confidence monitoring
- Automatic DC removal
- VistaLINK® - capable offering remote control and configuration capabilities via SNMP using VistaLINK® PRO, 9000NCP or 9000NCP2 Network Control Panel
- VistaLINK® is available when modules are used with the 3RU 7700FR-C frame and a 7700FC VistaLINK® Frame Controller

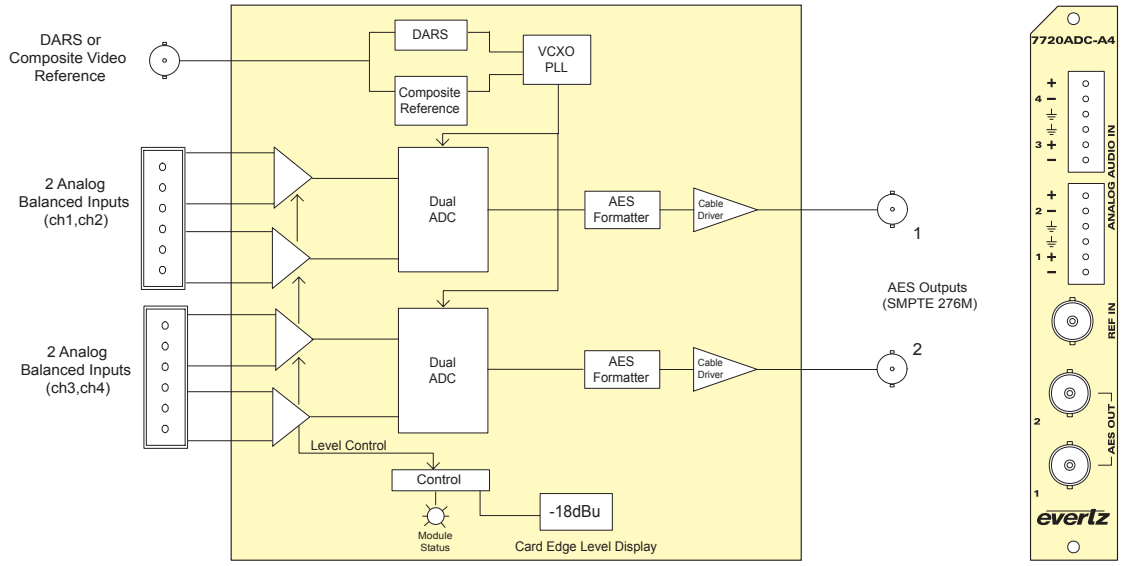

Specifications

Analog Audio Input:

Number of Inputs:	4
Type:	Balanced analog audio
Connector:	Removable terminal strip
Input Impedance:	10kΩ minimum (differential)
Sampling Frequency:	48kHz (freerun or locked to the reference)
Signal Level:	0dB FS = 8dBu to 27dBu (programmable via 0dB/+6dB jumper and card edge fine gain with -10dB +10dB range)
Frequency Response:	±0.1dB (20Hz to 20kHz)
SNR:	100dB with input at -1dB FS
THD+N:	< 0.001% (> 100dB) @ 20Hz to 20kHz, -1dB FS
CMRR:	> 100dB @ 1kHz
Crosstalk:	< -100dB @ 20Hz-20kHz
Inter-channel Phase error:	< 1°, 20Hz-20kHz

Reference Input:

Standard:	NTSC (SMPTE 170M), PAL (ITU624-4), DARS
Number of Inputs:	1
Connector:	BNC per IEC 60169-8 Amendment 2
Signal Level:	
Video:	Max: 2V p-p video (composite only) Min: Sync level 150m (composite only)
DARS:	SMPTE 276M, 1V p-p
Frequency Lock Range:	±100ppm from nominal
Input Impedance:	High impedance
Return Loss:	> 25dB to 10MHz (with external 75Ω termination)

AES Audio Output:

Standard:	SMPTE 276M single ended AES
Number of Outputs:	2
Connectors:	BNC per IEC 60169-8 Amendment 2
Resolution:	24-bits
Sampling Rate:	48kHz
Impedance:	75Ω unbalanced
I/O Delay:	0.87ms

Electrical:

Voltage:	+12V DC
Power:	10W (nominal)
EMI/RFI:	Complies with FCC Part 15, Class A EU EMC Directive

Physical:

Number of slots:	1

Ordering Information:

7720ADC-A4	Quad Analog Audio to Dual AES Converter
Ordering Options	Rear Plate must be specified at time of order Eg: Model +3RU

Rear Plate Suffix

+3RU	3RU Rear Plate for use with 7700FR-C Multiframe
+1RU	1RU Rear Plate for use with 7701FR Multiframe
+SA	Standalone Enclosure Rear Plate

Accessories

7700FC	VistaLINK® Frame Controller
9000NCP	1RU VistaLINK® General Purpose Network Control Panel
9000NCP2	2RU VistaLINK® General Purpose Network Control Panel

Enclosures

7700FR-C	3RU Multiframe which holds up to 15 single slot modules
7701FR	1RU Multiframe which holds up to 3 single or dual slot modules
S7701FR	Standalone enclosure

7720DAC-A4, 7720DAC-A4-B

Dual AES to Quad Analog Audio Converter with Unbalanced /Balanced AES Inputs

The 7720DAC-A4 is a high-quality, 24-bit, digital to analog audio converter which converts 2 AES/EBU digital signals to 4 balanced analog audio signals. The 7720DAC-A4 has two independent AES/EBU converters. The input sample rates supported are 44.1kHz and 48kHz. All analog audio output levels may be set individually from the front panel.

Level control is provided via a card edge toggle and the set gain level can be read out from a card edge display for convenience. The full scale digital signal can be calibrated to product analog peak levels ranging from 12dBu to 25dBu with 0.1dB resolution.

The audio DAC features a card edge VU meter for quick confidence monitoring. Four separate level indicators are provided via bargraphs for quick validation of audio program material.

Features & Benefits

- AES3/IEC-958 or AES3/SMPTE276/S/PDIF
- 24-bit, high-quality conversion
- 44.1 and 48kHz sampling rate
- 0dBFS programmable from 12dBu to 25dBu
- Support for 4 channels of balanced analog audio (2 AES/EBU)
- Clock recovery via VCXO for extra stable sample clock generation
- A card edge display provides a 4 channel bargraph type level indicator display for confidence monitoring
- Local card edge display for level setup
- Drives directly 600Ω loads
- VistaLINK® - capable offering remote control and configuration capabilities via SNMP using VistaLINK® PRO, 9000NCP or 9000NCP2 Network Control Panel
- VistaLINK® is available when modules are used with the 3RU 7700FR-C frame and a 7700FC VistaLINK® Frame Controller

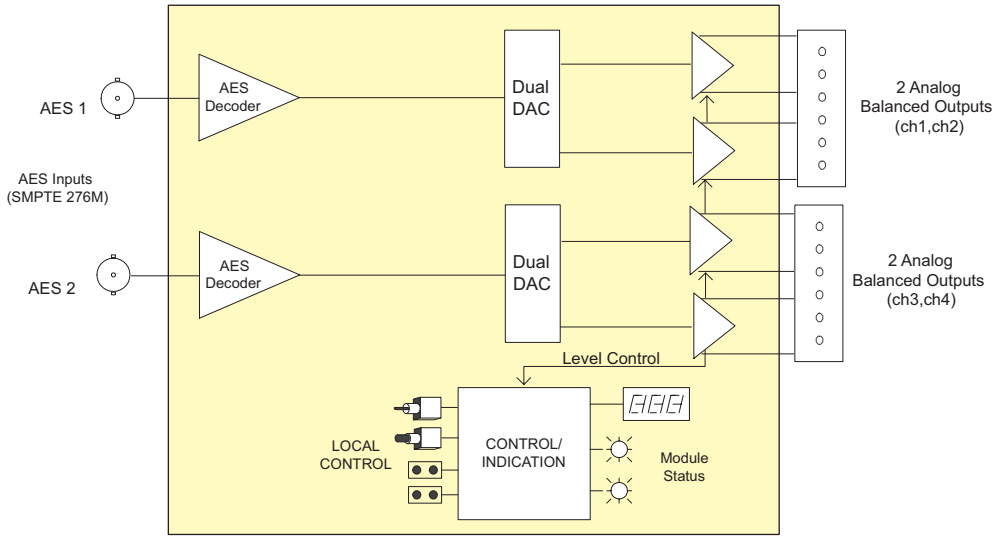

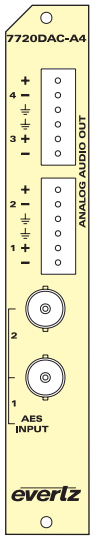

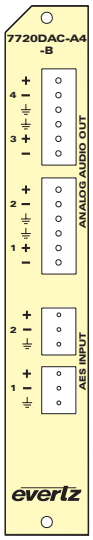

Specifications

AES Audio Inputs (7720DAC-A4):

Number of inputs:	2
Standard:	SMPTE 276M, AES3-2001
Connector:	BNC per IEC 60169-8 Amendment 2
Input type:	Unbalanced, isolated ground
Impedance:	75Ω, -25dB return loss to 6MHz
Accepted levels:	0.1V p-p to 2.5V p-p
Cable distance:	> 4000ft (with 1V p-p cable drive)
Sample rates:	48kHz and 44.1kHz ±100ppm

AES Audio Inputs (7720DAC-A4-B):

Number of inputs:	2
Standard:	AES3-1992 (ANSI S4.40-1992), IEC-958 (except connectors)
Connector:	3-pin removable terminal strip
Input type:	Balanced pair, shield, transformer-coupled
Equalization:	> 400m @48kHz with 2 to 10V p-p drive and Belden 1800B or equivalent shielded twisted pair cable
Impedance:	110Ω, ±10%
Accepted signal levels:	0.2V p-p to 10V p-p
Cable distance:	> 1300ft (with 2V p-p to 7V p-p cable drive)
Sample rates:	48kHz and 44.1kHz ±100ppm

Analog Audio Outputs:

Number of Outputs:	4 balanced
Connector:	Two 6-pin removable terminal strips
Output Impedance:	66Ω
Output Loads:	Hi-Z or 600Ω
Peak Conversion Level:	0dB FS =>12 to 25dBu (user settable)
Frequency Response:	< ±0.05dB (20Hz to 20kHz)
Dynamic Range:	24 bits
THD+N:	< 0.001% (> 100dB) @ 20Hz to 20kHz, @-1dB FS, unweighted
Crosstalk:	110dB (20Hz to 20kHz)
DC Offset:	< ±30mV
SNR:	> 110dB "A" weighted
Inter-Channel Phase Error:	< ±1° (20Hz to 20kHz)
Digital to Analog Delay:	0.95ms

Electrical:

Voltage:	+12V DC
Power:	12W
EMI/RFI:	Complies with FCC Part 15, Class A EU EMC Directive

Physical:

Number of Slots:	1

Ordering Information

7720DAC-A4	Dual AES to Quad Analog Audio Converter with unbalanced AES inputs
7720DAC-A4-B	Dual AES to Quad Analog Audio Converter with balanced AES inputs

Ordering Options Rear Plate must be specified at time of order
Eg: Model +3RU

Rear Plate Suffix

+3RU	3RU Rear Plate for use with 7700FR-C Multiframe
+1RU	1RU Rear Plate for use with 7701FR Multiframe
+SA	Standalone Enclosure Rear Plate

Accessories

7700FC	VistaLINK® Frame Controller
9000NCP	1RU VistaLINK® General Purpose Network Control Panel
9000NCP2	2RU VistaLINK® General Purpose Network Control Panel

Enclosures

7700FR-C	3RU Multiframe which holds up to 15 single slot modules
7701FR	1RU Multiframe which holds up to 3 single or dual slot modules
S7701FR	Standalone enclosure

7720AM-AES4

Quad AES Audio Mixer, Delay, Audio Swapper

The 7720AM-AES4 Audio Mixer accepts 4 AES/EBU digital audio inputs (eight channels) and synchronously mixes all channels and routes them to any of the four AES outputs. The 7720AM-AES4 performs channel swapping, over mixes, mix downs and on-air breakaways. All processing is at 24-bit resolution.

The 7720AM-AES4 provides eight channels of independent audio delay control making it ideal for retiming AES audio.

A non-PCM data mode is provided in order to pass Dolby-E or AC3 data. In this mode, channel swapping and delay is supported (mixing is not) with the requirement that the inputs are 48kHz synchronous and locked (a reference is required to be used in this mode).

Features & Benefits

- 24-bit audio processing for high fidelity
- Flexible sample rate of 28kHz to 108kHz (will be resampled to 48kHz locked to reference on output)
- Audio Sample Rate Converters can be disabled
- GPI control
- Dolby-E/AC3 pass through mode
- Card edge LEDs indicate: module fault, audio, genlock and DARS present
- Maximum delay of 2.54 seconds with sample accuracy
- Bypass relay outputs at the loss of power

Additional Features when controlled through VistaLINK®

- Provides 2:1 audio mixing capability, ideal for "ducking" audio or voiceovers
- Can be used at the inputs of an audio console to expand inputs and add mixing capacity
- Performs voice overs, mix downs and on-air breakaways
- Reassignment of audio channels
- +12 to -12dB gain control on each mixer input in 0.25dB steps
- Continuous and independent channel delay adjustment up to 2.54 seconds
- VistaLINK® - capable offering remote control and configuration capabilities via SNMP (using VistaLINK® PRO, 9000NCP or 9000NCP2 Network Control Panel) is available when modules are used with the 3RU 7700FR-C frame and a 7700FC VistaLINK® Frame Controller

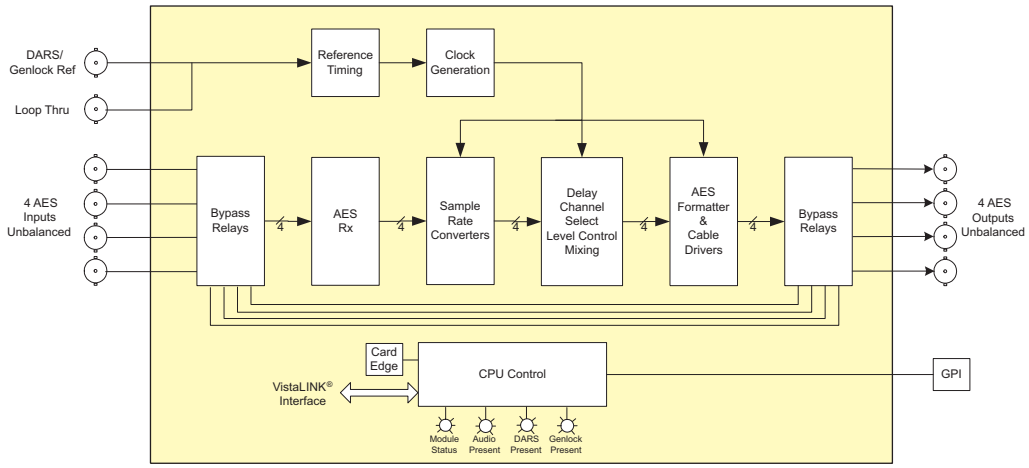

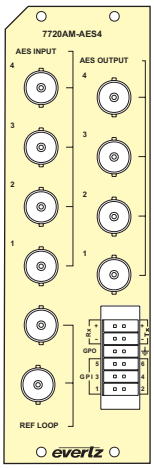

Specifications

AES Audio Inputs and Outputs:

Number of Inputs:	4
Number of Outputs:	4
Standard:	SMPTE 276M, single ended synchronous or asynchronous AES
Connectors:	BNC per IEC 60169-8 Amendment 2
Resolution:	24 bits
Sampling Rate:	48kHz
Impedance:	75Ω unbalanced
Signal Level:	1V p-p nominal

Genlock Input:

Type:	HD Tri-level syncs, NTSC or PAL Color Black 1V p-p, or Composite bi-level sync (525i/59.94 or 625i/50) 300mV
Connector:	BNC loop per IEC 60169-8 Amendment 2
Termination:	75Ω (jumper selectable)

DARS Reference:

Type:	Digital Audio Signal with 48kHz sample rate
Standard:	SMPTE 276M-1995 single ended AES, AES-11
Connectors:	BNC loop per IEC 60169-8 Amendment 2
Termination:	75Ω (jumper selectable)

Input to Output Processing:

Gain:	±12dB in 0.25dB steps
Delay:	Min. 7 samples with sample rate converters disabled Min. 92 samples with sample rate converters enabled Adjustable to approximately 2.54 seconds

General Purpose In/Out:

GP Inputs:	Load user preset configurations
GP Output:	GPO1: Low when video input is missing
Type:	Opto-isolated, active low with internal pull-ups to +5V
Connector:	8 pins on 12-pin removable terminal block
Signal Level:	+5V nominal

Data Logging Serial Port:

Standard:	RS 422
Connector:	5 pins on 12-pin removable terminal block
Function:	(not used at this time)

Electrical:

Voltage:	+12V DC
Power:	8W
EMI/RFI:	Complies with FCC Part 15, Class A EU EMC Directive

Physical:

7700 frame mounting:
Number of slots: 2
7701 frame mounting:
Number of slots: 1

Ordering Information:

7720AM-AES4	Quad Analog Audio Mixer, Delay, Audio Swapper (Requires 7700FC for full module control)
Ordering Options	Rear Plate must be specified at time of order Eg. Model +3RU
Rear Plate Suffix	
+3RU	3RU Rear Plate for use with 7700FR-C Multiframe
+1RU	1RU Rear Plate for use with 7701FR Multiframe

Accessories

7700FC	VistaLINK® Frame Controller
9000NCP	1RU VistaLINK® General Purpose Network Control Panel
9000NCP2	2RU VistaLINK® General Purpose Network Control Panel

Enclosures

7700FR-C	3RU Multiframe which holds up to 15 single slot modules
7701FR	1RU Multiframe which holds up to 3 single or dual slot modules

The AESIMP-12 series impedance converters allow transmission of AES/EBU digital audio signals, with sampling rates ranging from 22kHz to 96kHz, over 75Ω coaxial cables. The conversion transformer changes a balanced 110Ω transmission line to an unbalanced 75Ω transmission line.

The AESIMP-12 series provides twelve XLR-3 type connectors (male or female) on the balanced side and BNC type connector on the unbalanced side. Two versions of the AESIMP-12 are available. The AESIMP-6F6M gives 6 converters in each direction. The AESIMP-1M is a single channel converter.

The rack mounting ears may be reversed to orient the panel for the greatest ease of installation. An identification strip holder is provided over the BNC connectors to assist in labeling sources and/or destinations.

	110Ω CONNECTOR		75Ω CONNECTOR
PART NUMBER	3-PIN XLR FEMALE	3-PIN XLR MALE	
AESIMP-1M		1	1 BNC
AESIMP-6F6M	6	6	12 BNC
AESIMP-12F	12		12 BNC
AESIMP-12M		12	12 BNC

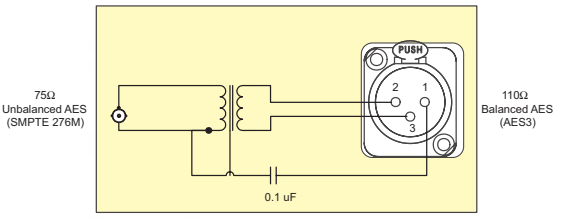

AESIMP-12F Block Diagram

AESIMP-12F

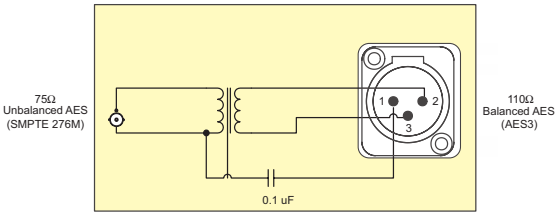

AESIMP-12M Block Diagram

AESIMP-12M

Specifications

Number of Channels: 12 (1 on AESIMP-1M)
Coupling: Transformer
Turns Ratio: 1.22:1

Unbalanced AES:
Standard: SMPTE 276M, single ended AES
Connectors: BNC per IEC 60169-8 Amendment 2
Signal Level: Approx. balanced level x 0.8, 5V p-p maximum
Impedance: 75Ω unbalanced

Balanced AES:
Standard: AES3-1992 balanced AES
Connectors: 3-pin Male XLR (AESIMP-12M) or 3-pin Female XLR (AESIMP-12F)
Signal Level: Approx. unbalanced level x 1.22, 5V p-p maximum
Impedance: 110Ω balanced

Ordering Information

AESIMP-1M	In-line transformer with a single BNC to a single male XLR	**AESIMP-12F**	12 Channel female XLR to BNC AES Impedance Matching Panel
AESIMP-6F6M	6 Female and 6 Male XLR to BNC AES Impedance Matching Panel	**AESIMP-12M**	12 Channel male XLR to BNC AES Impedance Matching Panel

7721AE4-HD

HD-SDI 4 AES Audio Embedder

The 7721AE4-HD Audio Embedder inserts AES audio signals into a 1.5Gb/s HD video signal as specified in SMPTE 299M. The companion 7721AD4-HD Audio De-embedder facilitates audio demultiplexing at the destination.

SMPTE 299M allocates four groups of four audio pairs that can be embedded into the SMPTE 292M bitstream. The 7721AE4-HD embeds up to 4 AES audio signals into two groups on the HD-SDI outputs for discrete 5.1 audio applications. The 7721AE4-HD is Dolby E compliant when the sample rate converters are turned off.

VistaLINK® enables control and configuration capabilities via Simple Network Management Protocol (SNMP). This offers the flexibility to manage the module status monitoring and configuration from SNMP - enabled control systems such as VistaLINK® PRO locally or remotely.

Features & Benefits

- Automatic detection of video standard
- Bypass relay protection on one SDI output for power failures
- 24-bit AES inputs and audio embedding
- Individual audio group assignment for each group
- Group lock mode maintains phase relationship between the groups for 5.1 audio applications
- Sample rate conversion disable on AES inputs to permit Dolby E embedding
- Programmable audio delays (up to 7 frames in ½ video field increments using DIP switches or up to 1.3 seconds in 1 sample increments, with VistaLINK® control
- Ancillary packet cleaning mode removes all audio before embedding
- Ancillary packet reformatting mode left justifies and removes unused packets before embedding
- Embeds audio on internally generated black or blue video when there is no video input
- Card edge LEDs indicate video and audio signal presence, and module fault
- VistaLINK® - capable for remote monitoring and control via SNMP (using VistaLINK® PRO) when installed in 7700FR-C frame with 7700FC VistaLINK® Frame Controller

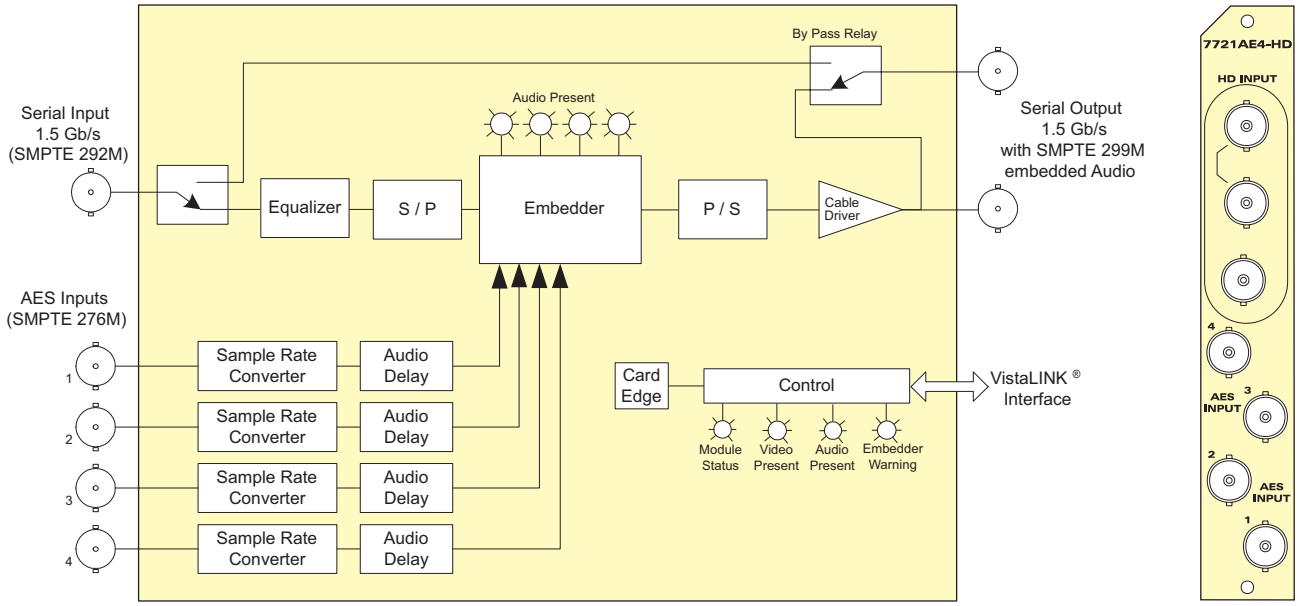

Specifications

Serial Video Input:

Standard:	SMPTE 292M (1.5Gb/s), (1080i/60, 1080i/59.94, 1080i/50, 1080p/30sF, 1080p/29.97sF, 1080p/25sF, 1080p/24sF, 1080p/23.98sF, 720p/60, 720p/59.94)
Connector:	1 BNC per IEC 60169-8 Amendment 2
Equalization:	Automatic 100m @ 1.5Gb/s with Belden 1694A or equivalent cable
Return Loss:	> 10dB up to 1.5Gb/s

Serial Video Outputs with Embedded Audio:

Standard:	Same as input
Number of Outputs:	2 (1 output bypass relay protected)
Embedded Audio:	SMPTE 299M - 24 bit 48kHz synchronous
Connectors:	BNC per IEC 60169-8 Amendment 2
Signal Level:	800mV nominal
DC Offset:	0V ±0.5V
Rise and Fall Time:	200ps nominal
Overshoot:	< 10% of amplitude
Return Loss:	> 10dB up to 1.5Gb/s
Wide Band Jitter:	< 0.2 UI

AES Audio Inputs:

Number of Inputs:	4
Standard:	SMPTE 276M, single ended AES
Connector:	BNC per IEC 60169-8 Amendment 2
Resolution:	24 bits
Sampling Rate:	32 to 96kHz synchronous or asynchronous (48kHz synchronous AES required when sample rate converter is disabled)
Impedance:	75Ω unbalanced
Signal Level:	1V p-p ±0.1V

System Performance:

Embedding Latency:	1.3 to 3ms
Audio Delay:	
DIP Switch Control:	Up to 7 frames, ½ frame increments (delay applied to all AES channels)
VistaLINK® or Serial Port Control:	Up to 1.35 seconds in 1 sample increments (independent control of delay for each channel)

Electrical:

Voltage:	+12VDC
Power:	11 Watts
EMI/RFI:	Complies with FCC Part 15, Class A EU EMC Directive

Physical:

7700 or 7701 frame mounting:
Number of slots: 1

Ordering Information

7721AE4-HD	HD-SDI 4 AES Audio Embedder

Ordering Options Rear Plate must be specified at time of order
Eg: Model +3RU

Rear Plate Suffix

+3RU	3RU Rear Plate for use with 7700FR-C Multiframe
+1RU	1RU Rear Plate for use with 7701FR Multiframe
+SA	Standalone Enclosure Rear Plate

Enclosures

7700FR-C	3RU Multiframe which holds up to 15 single slot modules
7701FR	1RU Multiframe which holds up to 3 single or dual slot modules
S7701FR	Standalone enclosure

The 7721AD-HD series Audio De-Embedders extract embedded audio as specified by SMPTE 299M from a 1.5Gb/s serial HDTV video signal. The companion 7721AE4-HD Audio Embedder facilitates audio multiplexing at the source. The 7721AD-HD is available in 2 different versions.

SMPTE 299M allows for up to four groups (4 channels/group) to be embedded within a serial digital signal. The 7721AD4-HD can de-embed two audio groups onto four unbalanced AES outputs. The 7721AD-A4-HD can de-embed one audio group onto two unbalanced AES outputs and 4 balanced analog audio outputs.

	Audio Outputs		Video 1.5Gb/s Reclocked Outputs
Model	AES	Analog	
7721AD4-HD	4	--	2
7721AD-A4-HD	2	4	--

Features & Benefits

- Automatic detection of video input format
- Card edge LEDs indicating module status, video presence, selected audio group data is present
- LED indication for the presence of each of the 4 audio groups within the input video
- Audio group selection via card edge DIP switches
- 7721AD-A4-HD has independent volume controls for each of the audio channel outputs
- VistaLINK® - capable for remote monitoring and control via SNMP (using VistaLINK® PRO) when installed in the 7700FR-C frame with a 7700FC VistaLINK® Frame Controller

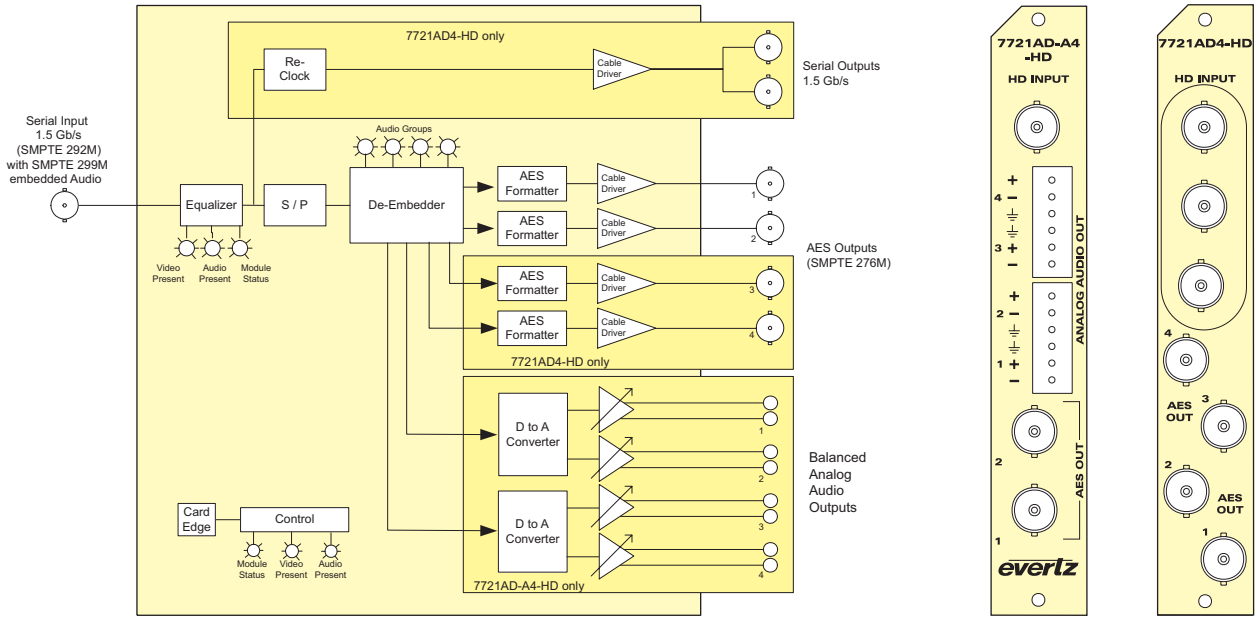

Specifications

Serial Video Input:

Standard:	SMPTE 292M, 1080i/60, 1080i/59.94, 1080i/50, 1080p/30(sF), 1080p/29.97(sF), 1080p/25(sF), 1080/24(sF), 1080/23.98(sF), 720p/60, 720p/59.94, 1035i/60, 1035i/59.94
Connector:	BNC per IEC 60169-8 Amendment 2
Equalization:	Automatic 100m @ 1.5Gb/s with Belden 1694A (or equivalent)
Return Loss:	> 10dB up to 1.5Gb/s

Reclocked Serial Video Output (7721AD4-HD only):

Standard:	Same as input
Number of Outputs:	2
Connector:	BNC per IEC 60169-8 Amendment 2
Signal Level:	800mV nominal
DC Offset:	0V ±0.5V
Rise and Fall Time:	200ps nominal
Overshoot:	< 10% of amplitude
Return Loss:	> 10dB up to 1.5Gb/s
Wide Band Jitter:	< 0.2 UI

AES Audio Output:

Standard:	SMPTE 276M, single-ended synchronous or asynchronous AES
Number of Outputs:	4 on 7721AD4-HD & 2 on 7721AD-A4-HD
Connector:	BNC per IEC 60169-8 Amendment 2
Sampling Rate:	48kHz
Impedance:	75Ω
Delay:	9 samples to approx. 3 seconds (user-adjustable)
Resolution:	24-bit

Analog Audio Output (7721AD-A4-HD Only):

Number of Outputs:	4
Type:	Balanced analog audio
Connector:	Two 6-pin terminal strip
Output Impedance:	66Ω balanced
Sampling Frequency:	48kHz
Signal Level:	0dB FS =>8 to 24dBu into 10kΩ load (user settable) 0dB FS =>8 to 22dBu into 600Ω load (user settable)
Frequency Response:	< ±0.1dB (20Hz to 20kHz)
Dynamic Range:	24-bit
THD+N:	> 90dB RMS @ 1kHz with 24dBu output
Crosstalk:	> 90dB RMS (20Hz to 20kHz)

System Performance:

De-embedding Latency:

HD-SDI to AES:	1.35ms (7721AD-A4-HD), 600µs (7721AD4-HD)

Electrical:

Voltage:	+12V DC
Power:	8W
EMI/RFI:	Complies with FCC Part 15, Class A EU EMC Directive

Physical:

Number of Slots:	1

Ordering Information

7721AD-A4-HD	HD-SDI Audio De-embedder with 2 unbalanced AES and 4 analog audio outputs
7721AD4-HD	HD-SDI Audio De-embedder with 4 unbalanced AES outputs (2 audio groups)

Ordering Options Rear Plate must be specified at time of order
Eg: Model +3RU

Rear Plate Suffix

+3RU	3RU Rear Plate for use with 7700FR-C Multiframe
+1RU	1RU Rear Plate for use with 7701FR Multiframe
+SA	Standalone Enclosure Rear Plate

Enclosures

7700FR-C	3RU Multiframe which holds up to 15 single slot modules
7701FR	1RU Multiframe which holds up to 3 single or dual slot modules
S7701FR	Standalone enclosure

7721AE8-HD

HD/SD-SDI 8 AES (16 Channel) Audio Embedder

The 7721AE8-HD Audio Embedder inserts 8 AES audio signals into 1.5Gb/s HD or 270Mb/s SD video signals as specified in SMPTE 299M or 272M respectively. The companion 7721AD8-HD Audio De-embedder facilitates audio demultiplexing at the destination.

The 7721AE8-HD embeds up to 8 AES audio signals into four groups on the HD/SD outputs enabling support for dual 5.1 audio applications. The module supports 24-bit AES audio embedding for HD and 20-bit audio embedding for SD. In addition, a full 16x16 audio channel router is available for channel re-mapping.

The 7721AE8-HD is Dolby compliant and automatically disables sample rate conversion on AES inputs to permit seamless Dolby embedding.

VistaLINK® enables control and configuration capabilities via Simple Network Management Protocol (SNMP). This offers the flexibility to manage the module status monitoring and configuration locally or remotely.

Features & Benefits

- Audio embedding into 1.5Gb/s HD or 270Mb/s SD video
- Automatic detection of input video standard
- Two 1.5Gb/s HD or 270Mb/s SD serial video outputs
- By-pass relay protection for main program output
- Supports 24-bit AES audio embedding for HD and 20-bit AES audio embedding for SD
- Flexible 16x16 audio channel routing for channel re-mapping
- Dolby compliant with automatic sample rate conversion disable on AES inputs to permit seamless Dolby embedding
- Miniature bargraph display to monitor audio content activity
- Numerous signal monitoring aids
- Ancillary packet cleaner removes any interfering audio groups prior to embedding
- User control to force removal of additional audio groups
- Embeds audio on internally generated black or blue video when there is no video input
- Card edge LEDs indicate video and audio signal presence and module fault
- VistaLINK® - capable for remote monitoring and control via SNMP (using VistaLINK® PRO) when installed in 7700FR-C frame with 7700FC VistaLINK® Frame Controller

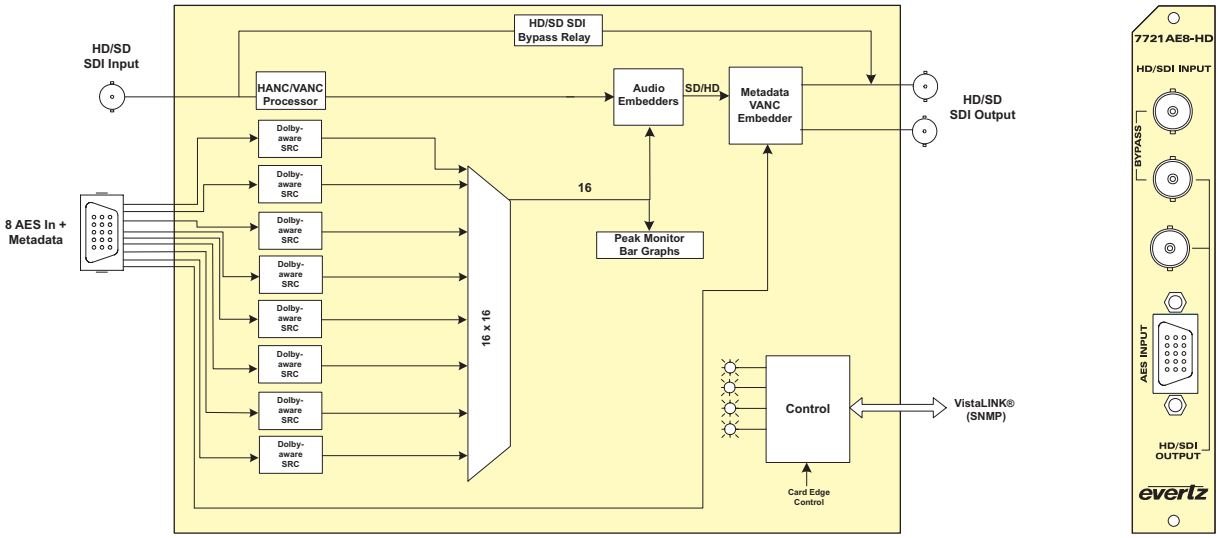

Specifications

Serial Video Input:

Standard:	SMPTE 292M (1.5Gb/s), (1080i/60, 1080i/59.94, 1080i/50, 1080p/30sF, 1080p/29.97sF, 1080p/25sF, 1080p/24sF, 1080p/23.98sF, 720p/60, 720p/59.94), 1035i/60, 1035i/59.94, 1080p/30, 1080p/29.97, 1080p/25, 1080p/24, 1080p/23.98, 720p/50 SMPTE 259M (270Mb/s), 525 or 625 line
Connector:	1 BNC per IEC 60169-8 Amendment 2

Serial Video Outputs with Embedded Audio:

Standard:	same as input
Number of Outputs:	2 (1 output bypass relay protected)
Embedded Audio:	SMPTE 299M - 24-bit 48kHz synchronous/SMPTE 272M - 20-bit
Connectors:	BNC per IEC 60169-8 Amendment 2
Return Loss:	> 15dB to 1.5Gb/s
Wideband Jitter:	< 0.20 UI

AES Audio Inputs:

Number of Inputs:	8
Standard:	SMPTE 276M, single-ended AES
Connector:	BNC per IEC 60169-8 Amendment 2 (with DB15 to BNC 6ft Breakout cable)
Resolution:	24 bits
Sampling Rate:	48kHz synchronous or asynchronous (48kHz synchronous AES required when sample rate converter is disabled)
Impedance:	75Ω unbalanced
Signal Level:	1V p-p ±0.1V @ termination load

Metadata Input/Output:

Type:	Dolby-E Metadata
Standard:	RS-422
Baud Rate:	115,200 baud

System Performance:

SRC THD+N:	-140dB
Embedding Latency:	0.3ms (HD), 0.7ms (SD), 3ms (with SRC)
Audio Delay:	Up to 1.35 seconds in 1 sample increments (independent control of delay for each channel)

Electrical:

Voltage:	+12V DC
Power:	7W
EMI/RFI:	Complies with FCC Part 15, Class A EU EMC Directive

Physical:

7700 or 7701 frame mounting:

Number of slots:	1

Ordering Information

7721AE8-HD	HD/SD-SDI 8 AES (16 Channel) Audio Embedder
Ordering Options	Rear Plate must be specified at time of order Eg: Model +3RU

Rear Plate Suffix

+3RU	3RU Rear Plate for use with 7700FR-C Multiframe
+1RU	1RU Rear Plate for use with 7701FR Multiframe
+SA	Standalone Enclosure Rear Plate

Enclosures

7700FR-C	3RU Multiframe which holds up to 15 single slot modules
7701FR	1RU Multiframe which holds up to 3 single or dual slot modules
S7701FR	Standalone enclosure

The 7721AD8-HD Audio De-embedder extracts embedded audio from all 4 groups of a 1.5Gb/s HD or a 270Mb/s SD video signal as specified in SMPTE 299M or 272M respectively. The module supports 24-bit AES audio de-embedding for HD and 20-bit audio de-embedding for SD. Up to 16 selected channels may be de-embedded and directed to 8 AES outputs. In addition, a full 16x16 audio channel router is available for channel re-mapping.

The 7721AD8-HD is Dolby E compliant and handles Dolby E metadata. Metadata is optionally de-embedded from VANC and can be provided as an output for downstream devices like Dolby E or Dolby AC3 Encoders.

VistaLINK® enables control and configuration capabilities via Simple Network Management Protocol (SNMP). This offers the flexibility to manage the module status monitoring and configuration locally or remotely.

Features & Benefits

- Audio de-embedding from 1.5Gb/s HD or 270Mb/s SD video
- Automatic detection of input video standard
- Two 1.5Gb/s HD or 270Mb/s SD serial video outputs
- Supports 24-bit AES audio de-embedding for HD and 20-bit AES audio de-embedding for SD
- Flexible 16x16 audio channel routing for channel re-mapping Dolby E compliant with VANC decode and output of Dolby™ metadata
- Card edge display for status and miniature bargraphs for audio peak levels
- Card edge LEDs indicate video and audio signal presence and module fault
- VistaLINK® - capable for remote monitoring and control via SNMP (using VistaLINK® PRO) when installed in 7700FR-C frame with 7700FC VistaLINK® Frame Controller

Inputs
- 1.5Gb/s HD or 270Mb/s SD serial video

Outputs
- Dolby Metadata output (RS422/485)
- 8 AES de-embedded outputs
- 2 re-clocked HD/SD serial video outputs

Controls
- Audio channel routing selection
- VANC decoder line, DID, and sDID

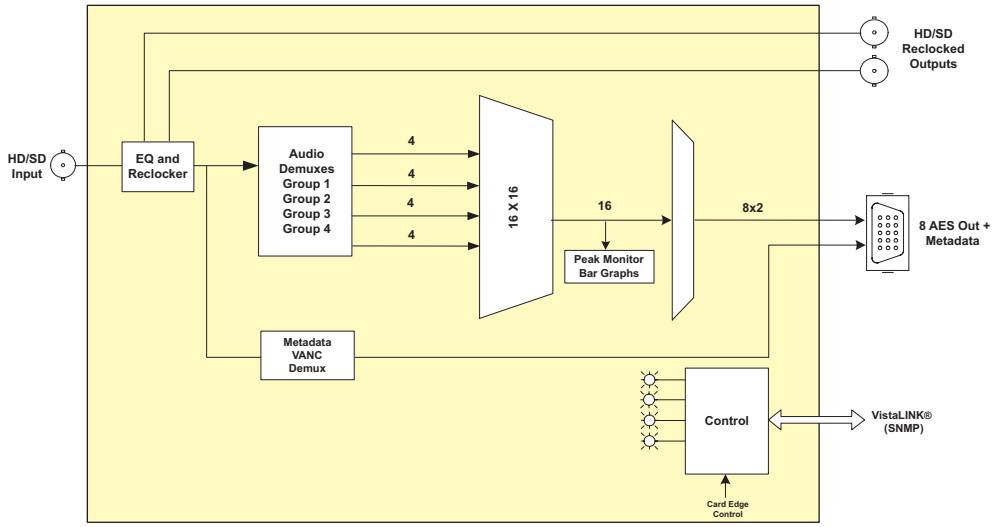

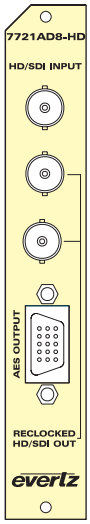

Specifications

Serial Video Input:
Standard: SMPTE 292M (1.5Gb/s), (1080i/60, 1080i/59.94, 1080i/50, 1080p/30sF, 1080p/29.97sF, 1080p/25sF, 1080p/24sF, 1080p/23.98sF, 720p/60, 720p/59.94), 1035i/60, 1035i/59.94, 1080p/30, 1080p/29.97, 1080p/25, 1080p/24, 1080p/23.98, 720p/50
SMPTE 259M (270Mb/s), 525 or 625 line
Connector: 1 BNC per IEC 60169-8 Amendment 2

Embedded Audio Input:
Standard: SMPTE 299M - 24 bit 48kHz synchronous
SMPTE 272M - 20 bit 48kHz synchronous

Metadata Output:
Type: Dolby E Metadata (RS422)
Connector: BNC per IEC 60169-8 Amendment 2 (with DB15 to BNC 6ft breakout cable)
Baud Rate: 115,200 baud (as per Dolby E usage)

Serial Video Outputs Re-clocked:
Standard: Same as input
Number of Outputs: 2
Connectors: BNC per IEC 60169-8 Amendment 2
Return Loss: > 15dB up to 1.5Gb/s
Wide Band Jitter: < 0.2 UI

AES Audio Outputs:
Standard: SMPTE 276M, single ended AES
Number of Outputs: 8
Connector: BNC per IEC 60169-8 Amendment 2 (with DB15 to BNC 6ft breakout cable)
Sampling Rate: 48kHz
Impedance: 75Ω unbalanced
Resolution: Up to 24-bit
Signal Level: 1V p-p ±0.1V @ termination load

System Performance:
De-embedding Latency: 0.2ms (HD), 0.7ms (SD)

Electrical:
Voltage: +12V DC
Power: 11W
EMI/RFI: Complies with FCC Part 15, Class A
EU EMC Directive

Physical:
7700 or 7701 frame mounting:
Number of slots: 1

Ordering Information

7721AD8-HD	HD/SD8 AES (16 Channel) Audio De-embedder
Ordering Options	Rear Plate must be specified at time of order Eg: Model +3RU

Rear Plate Suffix

+3RU	3RU Rear Plate for use with 7700FR-C Multiframe
+1RU	1RU Rear Plate for use with 7701FR Multiframe
+SA	Standalone Enclosure Rear Plate

Enclosures

7700FR-C	3RU Multiframe which holds up to 15 single slot modules
7701FR	1RU Multiframe which holds up to 3 single or dual slot modules
S7701FR	Standalone enclosure

7721AE-A4-HD

HD/SD Analog Audio Embedder

The 7721AE-A4-HD Analog Audio Embedder performs A/D conversion on 4 balanced pairs of analog audio (as one audio group) and embeds them into a 1.5Gb/s serial HD input video signal or a 270Mb/s serial SD input video signal as specified by SMPTE 299M/272M. The companion 7721AD-A4-HD Audio De-embedder facilitates audio de-multiplexing at the destination.

The 7721AE-A4-HD occupies one card slot in the 3RU frame , which will hold up to 15 single slot modules or one slot in the 1RU frame, which will hold up to three modules. The 7721AE-A4-HD also comes in a standalone unit.

VistaLINK® enables control and configuration capabilities via Simple Network Management Protocol (SNMP). This offers the flexibility to manage the module status monitoring and configuration from SNMP enabled control systems such as Evertz VistaLINK®.

Features & Benefits

- Automatic detection of video input format
- Supports 1.5Gb/s HD per SMPTE 292M, 270Mb/s SD per SMPTE 259M-C, and SDTi per SMPTE 305M
- Programmable audio delays (up to 5 frames or 84 milliseconds)
- Selectable ancillary packet cleaning mode removes all audio before embedding
- Individual audio channel assignment for embedded audio group
- Audio mixer per audio channel to provide voice-over
- Upstream embedded Dolby E compatible (passed through)
- Monitoring headphone jack for audio input and embedded audio output
- Comprehensive signal and card status monitoring via four-character card-edge display and LEDs
- VistaLINK® - capable for remote monitoring and control via SNMP (using VistaLINK® PRO) when installed in 7700FR-C frame with 7700FC VistaLINK® Frame Controller

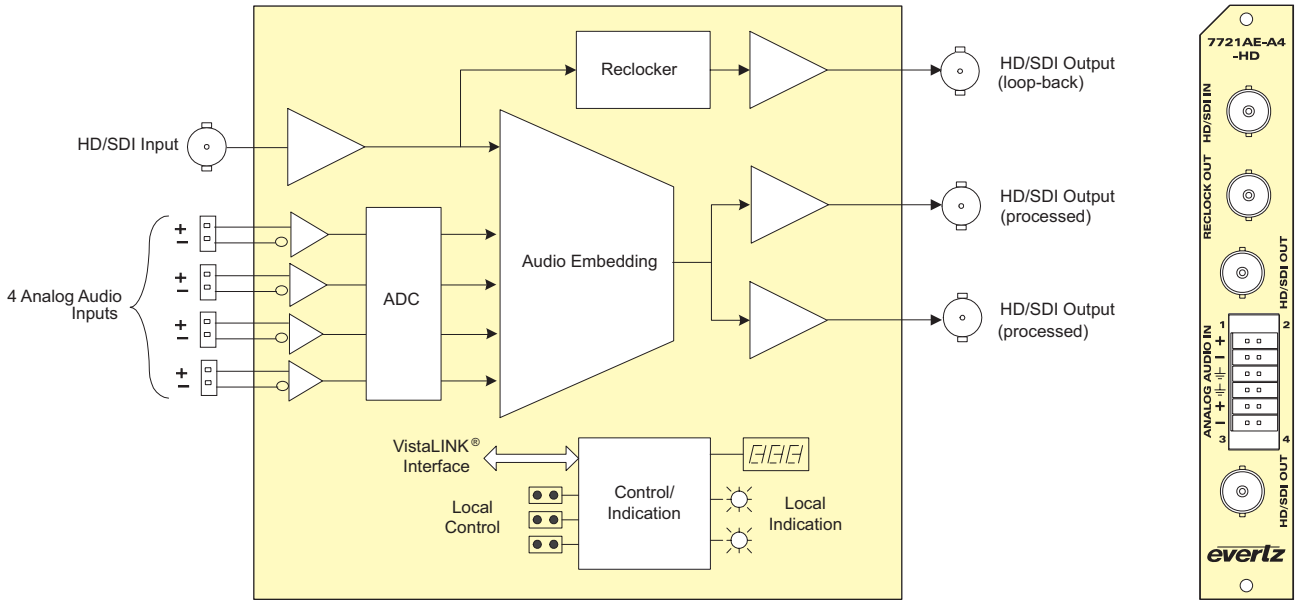

Specifications

Serial Video Input:

Standard:	Auto detect 1.5Gb/s SMPTE 292M or 270Mb/s SMPTE 259M-C, 525 or 625 line component, SMPTE 305M, (SDTi)
Connector:	1 BNC per IEC 60169-8 Amendment 2
Equalization:	Automatic to 300m @ 270Mb/s with Belden 1694A or equivalent cable, 110m @ 1.5Gb/s
Return Loss:	> 15dB up to 1.5GHz

Serial Video Output:

Number of Outputs:	1 Reclocked Loopback 2 same as input with embedded audio
Connector:	BNC per IEC 60169-8 Amendment 2
Signal Level:	800mV nominal
DC Offset:	0V ±0.5V
Rise and Fall Time:	900ps nominal
Overshoot:	< 10% of amplitude
Return Loss:	> 15dB at 270Mb/s
Wide Band Jitter:	< 0.2 UI

Analog Audio Inputs:

Number of Inputs:	4
Type:	Balanced analog audio
Connector:	12-pin removal terminal block
Input impedance:	High Impedance (> 20KΩ)
Freq. Response:	±0.1dB, 20Hz to 20kHz
THD 20Hz-20kHz:	< 0.005%
Channel Phase Diff.:	±1°
SNR (weighted):	> 85dB with input @24dBu (nominal)
Max. Audio Input Level:	+24dBu
Signal Quantization:	24 bits

Electrical:

Voltage:	+12V DC
Power:	10W
EMI/RFI:	Complies with FCC Part 15, Class A EU EMC directive

Physical:

Number of slots:	1

Ordering Information

7721AE-A4-HD	HD/SD Analog Audio Embedder
Ordering Options	Rear Plate must be specified at time of order Eg: Model +3RU

Rear Plate Suffix

+3RU	3RU Rear Plate for use with 7700FR-C Multiframe
+1RU	1RU Rear Plate for use with 7701FR Multiframe
+SA	Standalone Enclosure Rear Plate

Enclosures

7700FR-C	3RU Multiframe which holds up to 15 single slot modules
7701FR	1RU Multiframe which holds up to 3 single or dual slot modules
S7701FR	Standalone enclosure

The 7721AE-A4 Analog Audio Embedder performs A/D conversion on 4 balanced pairs of analog audio (as one audio group) and embeds them into a 270Mb/s serial SD input video signal as specified by SMPTE 272M. The companion 7720AD-A4 Audio De-embedder facilitates audio de-multiplexing at the destination.

The 7721AE-A4 occupies one card slot in the 3RU frame (7700FR-C), which will hold up to 15 1-slot modules or one slot in the 1RU frame (7701FR), which will hold up to three modules. The 7721AE-A4 also comes in a standalone unit (S7701FR).

VistaLINK® enables control and configuration capabilities via Simple Network Management Protocol (SNMP). This offers the flexibility to manage the module status monitoring and configuration from SNMP - enabled control systems such as Evertz VistaLINK® PRO.

Features & Benefits

- Automatic detection of video input format
- Supports 270Mb/s SD per SMPTE 59M-C, and SDTi per SMPTE 305M
- Programmable audio delays (up to 5 frames or 84 milliseconds)
- Selectable ancillary packet cleaning mode removes all audio before embedding
- Individual audio channel assignment for embedded audio group
- Audio mixer per audio channel to provide voice-over
- Upstream embedded Dolby E compatible (passed through)
- Monitoring headphone jack for audio input and embedded audio output
- Comprehensive signal and card status monitoring via four-character card-edge display and LEDs
- VistaLINK® - capable for remote monitoring and control via SNMP (using VistaLINK® PRO) when installed in 7700FR-C frame with 7700FC VistaLINK® Frame Controller

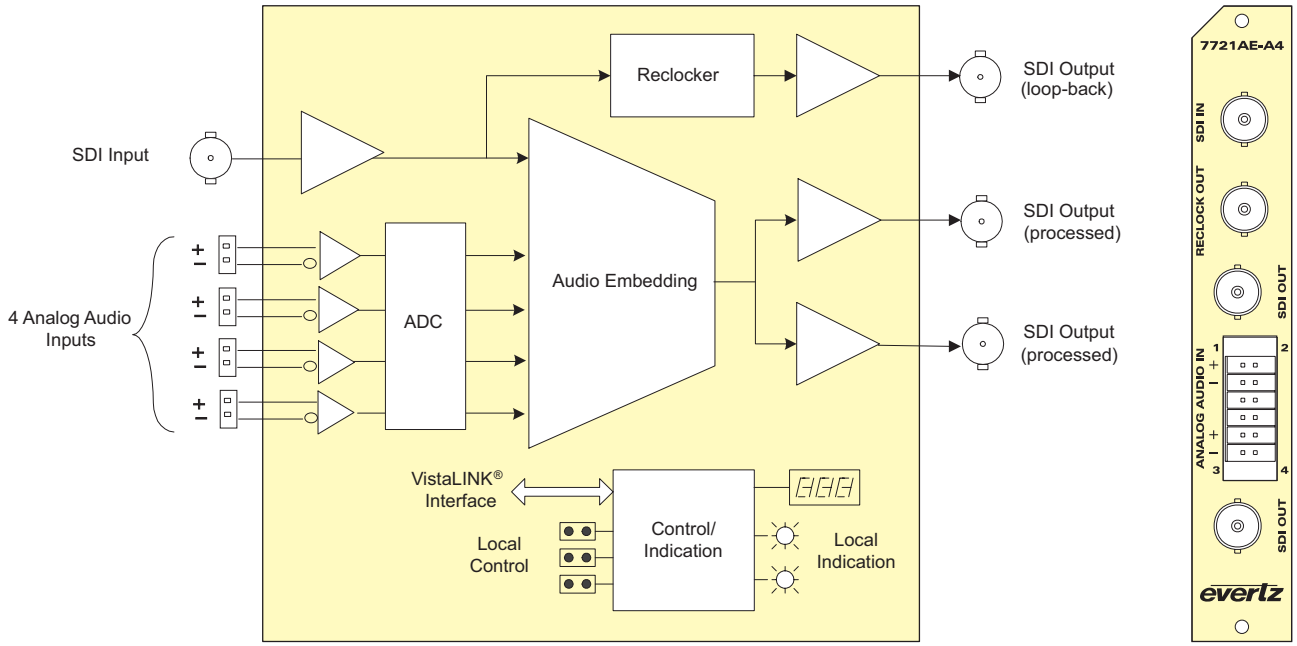

Specifications

Serial Video Input:

Standard:	Auto detect 270Mb/s SMPTE 259M-C, 525 or 625 line component, SMPTE 305M, (SDTi)
Connector:	1 BNC per IEC 60169-8 Amendment 2
Equalization:	Automatic to 300m @ 270Mb/s with Belden 1694A or equivalent cable
Return Loss:	> 15dB up to 270Mb/s

Serial Video Output:

Number of Outputs:	1 Reclocked Loopback 2 same as input with embedded audio
Connector:	BNC per IEC 60169-8 Amendment 2
Signal Level:	800mV nominal
DC Offset:	0V ±0.5V
Rise and Fall Time:	900ps nominal
Overshoot:	< 10% of amplitude
Return Loss:	> 15dB at 270Mb/s
Wide Band Jitter:	< 0.2 UI

Analog Audio Inputs:

Number of Inputs:	4
Type:	Balanced analog audio
Connector:	12-pin removal terminal block
Input impedance:	High Impedance (> 20kΩ)
Freq. Response:	±0.1dB, 20Hz to 20kHz
THD 20Hz-20kHz:	< 0.005%
Channel Phase Diff.:	±1°
SNR (weighted):	> 85dB with input @24dBu (nominal)
Max. Audio Input: Level:	+24dBu
Signal Quantization:	20 bits

Electrical:

Voltage:	+12V DC
Power:	10W
EMI/RFI:	Complies with FCC Part 15, Class A EU EMC directive

Physical:

Number of slots:	1

Ordering Information

7721AE-A4	SD-SDI Analog Audio Embedder
Ordering Options	Rear must be specified at time of order Eg: Model +3RU7721AE-A4 - SD-SDI Analog Audio Embedder

Rear Plate Suffix

+3RU	3RU Rear Plate for use with 7700FR-C Multiframe
+1RU	1RU Rear Plate for use with 7701FR Multiframe
+SA	Standalone Enclosure Rear Plate

Enclosures

7700FR-C	3RU Multiframe which holds up to 15 single slot modules
7701FR	1RU Multiframe which holds up to 3 single or dual slot modules
S7701FR	Standalone Enclosure

7720AE4

SD-SDI 4 AES Audio Embedder

The 7720AE4 Audio Embedder inserts AES audio signals into a 270Mb/s SDI video signal as specified in SMPTE 272M. The companion 7720AD4 Audio De-embedder facilitates audio demultiplexing at the destination.

SMPTE 272M allocates four groups of four audio channels that can be embedded into the SMPTE 259M bitstream. The 7720AE4 embeds up to 4 AES audio signals into two groups on the SDI outputs for discrete 5.1 audio applications. The 7720AE4 is Dolby E compliant when the sample rate converters are turned off.

VistaLINK® enables control and configuration capabilities via Simple Network Management Protocol (SNMP). This offers the flexibility to manage the module status monitoring and configuration from SNMP - enabled control systems such as Evertz VistaLINK® PRO locally or remotely.

Features & Benefits

- Automatic detection of 525 line and 625 line input
- Bypass relay protection on one SDI output for power failures
- 20-bit AES input and audio embedding
- Individual audio group assignment for each group
- Group lock mode maintains phase relationship between the groups for 5.1 audio applications
- Sample rate conversion disable on AES inputs to permit Dolby E embedding
- Programmable audio delays (up to 7 frames in ½ video field increments using DIP switches or up to 1.3 sec in 1 sample increments with VistaLINK® control
- Ancillary packet cleaning mode removes all audio before embedding
- Ancillary packet reformatting mode left justifies and removes unused packets before embedding
- Embeds audio on internally generated black or blue video when there is no video input
- Card edge LEDs indicate video and audio signal presence, and module fault
- VistaLINK® - capable for remote monitoring and control via SNMP (using VistaLINK® PRO, 9000NCP or 9000NCP2 Network Control Panel) when installed in 7700FR-C frame with 7700FC VistaLINK® Frame Controller

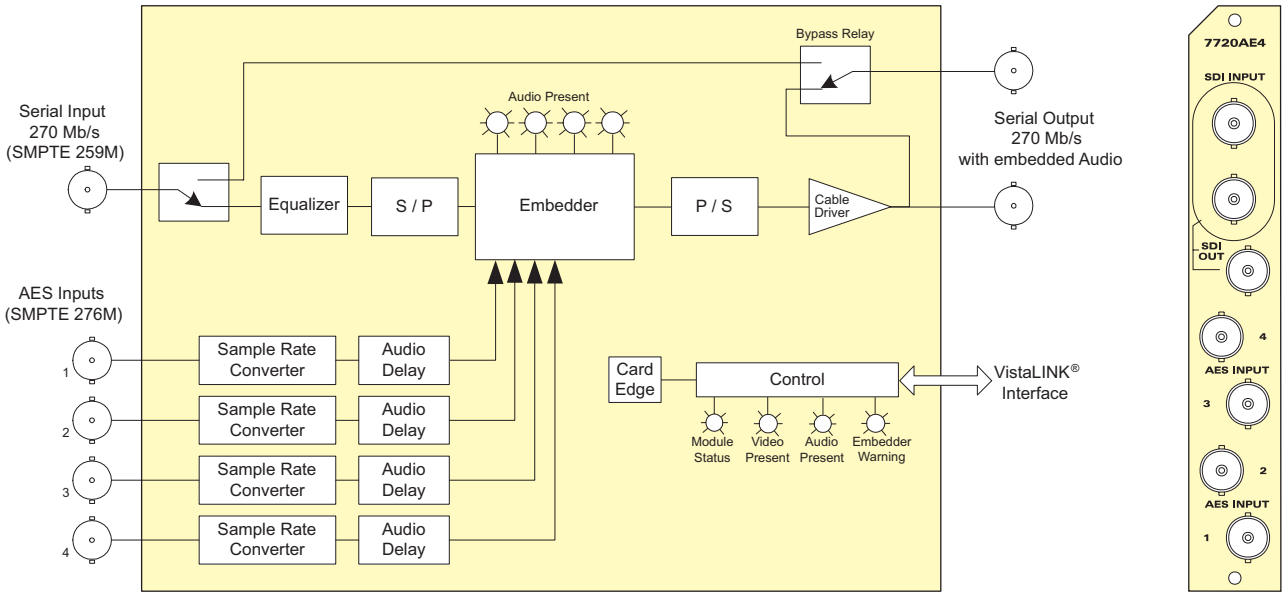

Specifications

Serial Video Input:

Standard:	SMPTE 259M-C (270Mb/s) 525 or 625 line component
Connector:	1 BNC per IEC 60169-8 Amendment 2
Equalization:	Automatic 210m @ 270Mb/s with Belden 8281 or equivalent cable
Return Loss:	> 15dB up to 540Mb/s

Serial Video Outputs with Embedded Audio:

Standard:	Same as input
Number of Outputs:	2 (1 output bypass relay protected)
Embedded Audio:	SMPTE 272M - 20 bit 48kHz synchronous
Connectors:	BNC per IEC 60169-8 Amendment 2
Signal Level:	800mV nominal
DC Offset:	0V ±0.5V
Rise and Fall Time:	900ps nominal
Overshoot:	< 10% of amplitude
Return Loss:	> 15dB up to 540Mb/s
Wide Band Jitter:	< 0.2 UI

AES Audio Inputs:

Number of Inputs:	4
Standard:	SMPTE 276M, single ended AES
Connector:	BNC per IEC 60169-8 Amendment 2
Resolution:	20 bits
Sampling Rate:	32 to 96kHz synchronous or asynchronous (48kHz synchronous AES required when sample rate converter is disabled)
Impedance:	75Ω unbalanced
Signal Level:	1V p-p ±0.1V

System Performance:

Embedding Latency:	1.3 to 3 ms
Audio Delay:	
DIP Switch Control:	Up to 7 frames, ½ frame increments (delay applied to all AES channels)
VistaLINK® or Serial Port Control:	Up to 1.35 seconds in 1 sample increments (independent control of delay for each channel)

Electrical:

Voltage:	+12V DC
Power:	9W
EMI/RFI:	Complies with FCC Part 15, Class A EU EMC Directive

Physical:

7700 or 7701 frame mounting:
Number of slots: 1

Ordering Information:

7720AE4	SD-SDI 4 AES Audio Embedder
Ordering Options	Rear Plate must be specified at time of order Eg: Model +3RU

Rear Plate Suffix

+3RU	3RU Rear Plate for use with 7700FR-C Multiframe
+1RU	1RU Rear Plate for use with 7701FR Multiframe
+SA	Standalone Enclosure Rear Plate

Accessories

7700FC	VistaLINK® Frame Controller
9000NCP	1RU VistaLINK® General Purpose Network Control Panel
9000NCP2	2RU VistaLINK® General Purpose Network Control Panel

Enclosures

7700FR-C	3RU Multiframe which holds up to 15 single slot modules
7701FR	1RU Multiframe which holds up to 3 single or dual slot modules
S7701FR	Standalone enclosure

7720AD-A4 / 7720AD4 / 7720AD4-B & 7720AD-B-A4-LTC

SD-SDI AES Audio De-embedder

The 7720AD4 series Audio De-embedders extract embedded audio as specified by SMPTE 272M from a 270Mb/s serial digital video signal. The companion 7720AE4 Audio Embedder facilitates audio multiplexing at the source. The 7720AD4 is available in 4 different versions.

SMPTE 272M allows for up to four groups (4 channels/group) to be embedded within a serial digital signal. The 7720AD4 can de-embed two audio groups onto four unbalanced AES outputs. The 7720AD4-B can de-embed two audio groups onto four balanced AES outputs. The 7720AD-A4 can de-embed one audio group onto two unbalanced AES outputs and 4 balanced analog audio outputs. The 7720AD-B-A4-LTC can de-embed one audio group onto two balanced AES outputs and 4 balanced analog audio outputs and can also be used as a VITC to LTC translator.

	Audio Outputs		Video 270Mb/s SDI Re-clocked Outputs
Model	AES	Analog	
7720AD-A4	2 Unbalanced	4	--
7720AD-B-A4-LTC	2 Balanced	3 +LTC or 4	--
7720AD4	4 Unbalanced	--	2
7720AD4-B	4 Balanced	--	1

Features & Benefits

- Card edge LEDs indicating module status, video presence, selected audio group data is present
- LED indication for the presence of each of the 4 audio groups within the input video
- Audio group selection via card edge DIP switches
- Audio channel swapping selection via card edge DIP switches (not on 7720AD-A4)
- Analog audio output models have independent volume controls for each of the audio channel outputs
- 7720AD-B-A4-LTC has 4 balanced audio outputs or 3 audio outputs and one VITC to LTC translator output - selection of VITC reader line
- With exception of the 7720AD-B-A4-LTC, all cards are VistaLINK® - capable for remote monitoring and control via SNMP (using VistaLINK® PRO) when installed in 7700FR-C frame with 7700FC VistaLINK® Frame Controller

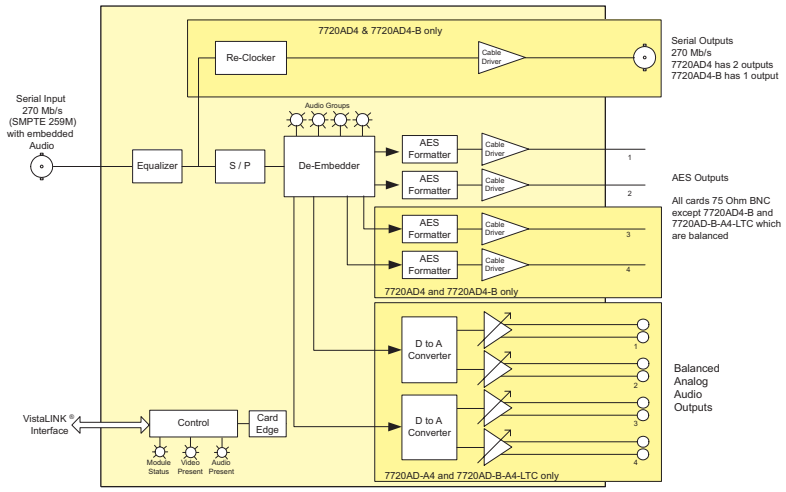

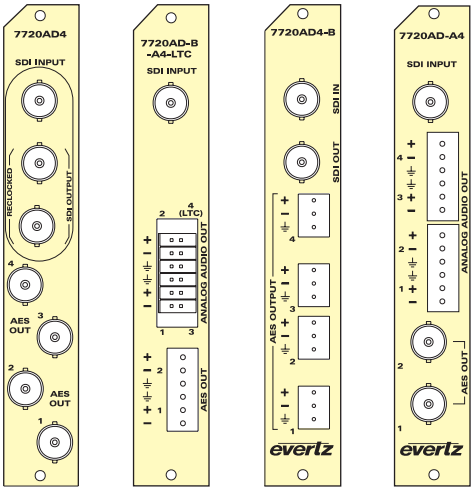

Specifications

Serial Video Input:

Standard:	SMPTE 259MC - 525 & 625 component
Connector:	1 BNC per IEC 60169-8 Amendment 2
Equalization:	Automatic 300m @ 270Mb/s with Belden 8281 or equivalent cable
Return Loss:	> 15dB up to 540Mb/s

Reclocked Serial Video Outputs:

Standard:	Same as input
Number of Outputs:	1 on 7720AD4-B, 2 on 7720AD4 0 on 7720AD-A4 & 7720AD-B-A4-LTC
Connectors:	BNC per IEC 60169-8 Amendment 2
Signal Level:	800mV nominal
DC Offset:	0V ±0.5V
Rise and Fall Time:	700ps nominal
Overshoot:	< 10% of amplitude
Return Loss:	> 15dB up to 270Mb/s
Wide Band Jitter:	< 0.2 UI

Unbalanced AES Audio Outputs (Not on -B versions):

Standard:	SMPTE 276M, single ended synchronous AES
Number of Outputs:	2 on 7720AD-A4, 4 on 7720AD4
Connectors:	BNC per IEC 60169-8 Amendment 2
Sampling Rate:	48kHz
Impedance:	75Ω unbalanced
Dynamic Range:	20-bit

Balanced AES Audio Outputs (B-versions only):

Standard:	AES3-1992
Number of Outputs:	2 on 7720AD-B-A4-LTC 4 on 7720AD4-B
Connector:	Terminal strip
Sampling Rate:	48kHz
Impedance:	110Ω
Dynamic Range:	20-bit

Input to Output Processing Delay:

SDI to AES:	1.35ms (A4 versions) 600µs all other versions
SDI to Analog:	2.25ms (A4 versions)

Analog Audio Outputs (A4 Versions Only):

Number of Outputs:	4
Type:	Balanced analog audio
Connector:	Terminal strip
Output Impedance:	66Ω balanced
Sampling Frequency:	48kHz
Signal Level:	0dB FS =>8 to 24dBu into 10kΩ loads (user settable) 0dB FS =>8 to 22dBu into 600Ω loads (user settable)
Frequency Response:	< ±0.1dB (20Hz to 20kHz)
THD+N:	> 90dB RMS @ 1kHz, with 24dBu output > 100dB RMS @ 20Hz to 20kHz, with 24dBu output
Crosstalk isolation:	> 100dB RMS (20Hz to 20kHz)

Electrical:

Voltage:	+12V DC
Power:	12W
EMI/RFI:	Complies with FCC Part 15, Class A EU EMC Directive

Physical:

Number of slots:	1

Ordering Information

7720AD-A4	SD-SDI AES Audio De-embedder with 2 unbalanced AES outputs and 4 balanced analog audio outputs
7720AD-B-A4-LTC	SD-SDI AES Audio De-embedder with 2 balanced AES outputs, 4 balanced analog audio outputs and VITC to LTC Translator
7720AD4	SD-SDI AES Audio De-embedder with 4 unbalanced AES outputs (2 audio groups)
7720AD4-B	SD-SDI AES Audio De-embedder with 4 balanced AES outputs (2 audio groups)

Ordering Options	Rear Plate must be specified at time of order Eg: Model +3RU
Rear Plate Suffix	
+3RU	3RU Rear Plate for use with 7700FR-C Multiframe
+1RU	1RU Rear Plate for use with 7701FR Multiframe
+SA	Standalone Enclosure Rear Plate
Enclosures	
7700FR-C	3RU Multiframe which holds up to 15 single slot modules
7701FR	1RU Multiframe which holds up to 3 single or dual slot modules
S7701FR	Standalone enclosure

7720AD8-DD-HD

HD/SD-SDI Audio De-embedder & Dolby E/AC-3 Decoder & Re-embedder

The 7720AD8-DD-HD Audio De-embedder and Dolby Decoder & Re-embedder extracts embedded audio from 4 specified groups as defined by SMPTE 299M from a 1.5Gb/s serial HDTV or as defined by SMPTE 272M from a 270Mb/s serial SDTV video signal.

One selected channel is processed by the on-card Dolby Decoder. If the channel contains Dolby E or Dolby Digital (AC3), it will yield up to 8 additional discrete audio channels, 2 channels of stereo downmix and the associated Dolby E metadata. Up to 16 selected channels may be optionally delayed up to 1.2 seconds and re-embedded into the output video and/or directed to AES outputs. Video output may be optionally delayed to help with lip sync. If PCM audio is embedded, the device acts as a simple 4 group audio de-embedder.

This device also handles the Dolby E Metadata. Metadata is optionally embedded in VANC and can be provided as an output for downstream devices (i.e. Dolby Encoders, Multichannel Audio Tool, etc.). Metadata can be monitored using VistaLINK® and dial norm parameters can be modified.

For lip sync cohesion and ease of editing, Dolby-E data is organized in blocks with lengths matching the associated video frame. The decoder will match the beginning of each output block with the start of video, as provided with the genlock input. Additional delay can be dialed up by the user, up to 1.2 secs. The 8 AES inputs can be configured as a backup, in the event the primary is lost, or as a voice-over source.

VistaLINK® enables control and configuration capabilities via Simple Network Management Protocol (SNMP). This offers the flexibility to manage the module status monitoring and configuration from SNMP - enabled control systems such as Evertz VistaLINK® PRO locally or remotely.

Features & Benefits

- Audio de-embedder and re-embedder for 4 groups of audio
- Dolby E/AC3 decoding for selected audio source
- Dolby Metadata is embedded in HD VANC for downstream device decoding
- 8 AES inputs for backup, voice-over or Dolby E/AC3 content
- Adjustable video delay to match Dolby decoder audio delay
- Automatic switchover to backup audio source on loss of selected Dolby stream
- Headphone jack for monitoring stereo down-mix or any input source
- Two full audio mixers with 16 output channels
- Card edge display
- VistaLINK® - capable offering remote monitoring, control and configuration capabilities via SNMP. VistaLINK® is available when modules are used with the 3RU 7700FR-C frame and a 7700FC VistaLINK® Frame Controller module in slot 1 of the frame

Inputs
- Program input supporting both HD (1.5Gb/s) and SD (270Mb/s)
- Reference input supporting NTSCM, PAL-B and tri-level for meta data phasing
- 8 AES inputs for backup/voice-over source
- Metadata input

Outputs
- 2 processed HD outputs (1 protected with bypass relay)
- 8 AES de-embedded and processed outputs
- 1 DB-9 Dolby metadata (RS422/485) on same connector as input

Card Edge LEDs
- Module Status
- Video Signal presence
- Selected audio group presence
- Dolby decoder processing status
- Genlock health/compatibility
- AES signal presence

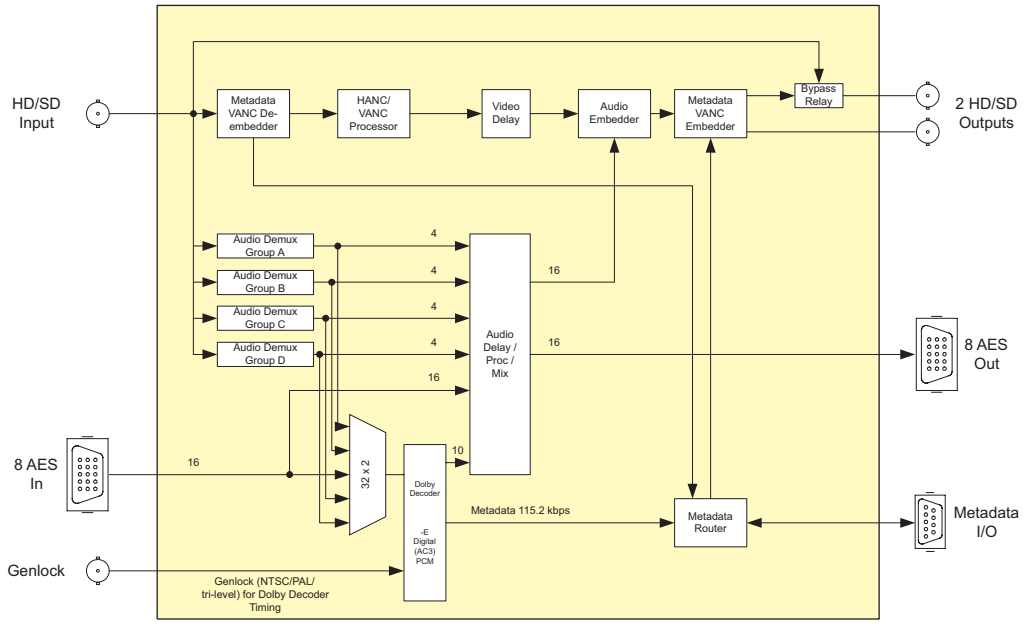

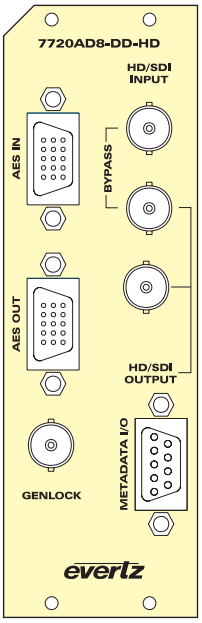

*DB15 to 8 channel unbalanced AES adapter provided

Specifications

Serial Video Input:

Standard:	SMPTE 292M, (1080i/60, 1080i/59.94, 1080i/50, 1080p/30 (sF), 1080p/29.97 (sF), 1080p/25 (sF), 1080p/24 (sF), 1080p/23.98 (sF), 720p/50, 720p/60, 720p/59.94, 1035i/60, 1035i/59.94) SMPTE 259M-C (270Mb/s) 525 or 625 line component
Connector:	BNC per IEC 60169-8 Amendment 2
Equalization:	
HD:	115m @ 1.5Gb/s with Belden 1694A
SD:	300m @ 270MB/s with Belden 1694A

Processed Serial Video Output:

Standard:	Same as input or user controlled
Number of Outputs:	2
Connector:	BNC per IEC 60169-8 Amendment 2
Signal Level:	800mV nominal
DC Offset:	0V ±0.5V
Rise and Fall Time:	Per standard
Overshoot:	< 10% of amplitude
Wide Band Jitter:	
HD:	< 0.16 UI
SD:	< 0.10 UI

Metadata I/O:

Type:	Dolby E Metadata
Connector:	FemaledB-9
Baud Rate:	115,200 baud

AES Audio Input:

Standard:	SMPTE 276M
Number of Inputs:	8 unbalanced
Connector:	Female High Density dB-15 (breakout cable to BNC provided)
Input Level:	0.1 to 2.5V p-p (5V p-p tolerant)
Input Impedance:	75Ω
Return Loss:	> 25dB 100kHz to 6MHz
Equalization:	Automatic to 1000m with Belden 1694A (or equivalent) @ 48kHz AES signal
Sample Rate:	32kHz to 48kHz

AES Audio Output:

Standard:	SMPTE 276M, single-ended AES
Number of Outputs:	8 unbalanced
Connector:	Female High Density dB-15 (breakout cable to BNC provided)
Sample Rate:	48kHz
Impedance:	75Ω
Resolution:	Up to 24-bit

Genlock Input:

Type:	NTSC, PAL, black or any tri-level, all autodetect
Connector:	1 BNC per IEC 60169-8 Amendment 2
Impedance:	hi-Z or 75Ω (jumper configurable)
Return Loss:	> 40dB to 10MHz

System Performance:

AC3 Decode Delay:	32ms nominal
Dolby E Decode Delay:	1 frame nominal
De-embedding Latency:	600µs nominal
Additional Audio Delay:	0 to maximum video delay +1 frame
Additional Video Delay:	0 to 12 frames (interlace) 0 to 28 frames (progressive)

Electrical:

Voltage:	+12V DC
Power:	21W
EMI/RFI:	Complies with FCC Part 15 Class A, EU EMC Directive

Physical:

Number of Slots:	
7700 frame mounting:	2
7701 frame mounting:	1

Ordering Information

7720AD8-DD-HD	HD/SD-SDI Audio De-embedder & Dolby E/AC-3 Decoder & Re-embedder

Ordering Options Rear Plate must be specified at time of order
Eg: Model +3RU

Rear Plate Suffix

+3RU	3RU Rear Plate for use with 7700FR-C Multiframe
+1RU	1RU Rear Plate for use with 7701FR Multiframe
+SA	Standalone Enclosure Rear Plate

Accessories
WPAES8-BNCM-6F Cable (included)

Enclosures

7700FR-C	3RU Multiframe which holds up to 15 single slot modules
7701FR	1RU Multiframe which holds up to 3 single or dual slot modules
S7701FR	Standalone enclosure

7721AE8-DEE-HD

HD/SD-SDI Audio Embedder & Dolby E Encoder

The 7721AE8-DEE-HD Audio Embedder & Dolby E Encoder inserts 8 AES inputs as 4 embedded audio groups into a 1.5Gb/s HD or a 270Mb/s SD video signal as specified by SMPTE 299M or 272M respectively.

Eight channels can be processed by the on-card Dolby Encoder. The encoder will transform the 8 discrete channels into 2 channels containing Dolby E and the associated Dolby E metadata. The 2 channels of Dolby E can be embedded into the video output or output to an AES. This device also handles the Dolby E Metadata.

Metadata is optionally embedded in VANC and can be provided as an output for downstream devices (i.e. Dolby Encoders, Multichannel Audio Tool, etc.).

Up to 16 selected channels may be optionally delayed up to 1.2 seconds and embedded into the output video and/or directed to AES outputs. Video output may be optionally delayed to help with lip sync. For lip sync cohesion and ease of editing, Dolby E data is organized in blocks with lengths matching the associated video frame. The encoder will match the beginning of each output block with the start of video, as provided with the genlock input. Up to 1.2 seconds of additional delay can be dialed up by the user.

Features & Benefits

- Dolby-E encoding modes available: 5.1+2, 5.1+2x1, 2x4, 4+2x2, 4+2+2x1, 4+4x1, 4x2, 3x2+2x1, 2x2+4x2, 2x2+4x1, 2+6x1, 8x1, 5.1, 5+2, 5+2x1, 3x2, 2x2+2x1, 2+4x1, 6x1, 4, 2x2, 2+2x1, 4x1, 7.1, and 7.1 screen
- Dolby-E encoding frame rates of 23.98, 24, 25, 29.97, and 30 frame/sec
- External colour-black reference not required for Dolby-E encoding
- Video reference input is still provided, and is compatible with bi-level and tri-level syncs
- Adjustable video delay to match Dolby encoder audio delay
- Dolby metadata is sourced from VANC or external RS-422 port (metadata authoring will be available in future releases)
- Dolby metadata monitoring and processing (dial norm adjustment) of any metadata input
- 8 AES inputs as well as 4 group de-embedder
- Two audio mixers, one for AES/embedded audio, another for Dolby-E encoding
- Headphone jack (on card edge) for monitoring any input source
- Card edge display
- Card edge LEDs for module status, video signal presence, selected audio group presence, Dolby Decoder status, Video Reference health/compatibility, and AES signal presence
- VistaLINK® enabled for remote monitoring and control via SNMP (using VistaLINK® PRO) when installed in the 3RU 7700FR-C frame with the 7700FC VistaLINK® Frame Controller module in slot 1 of the frame.

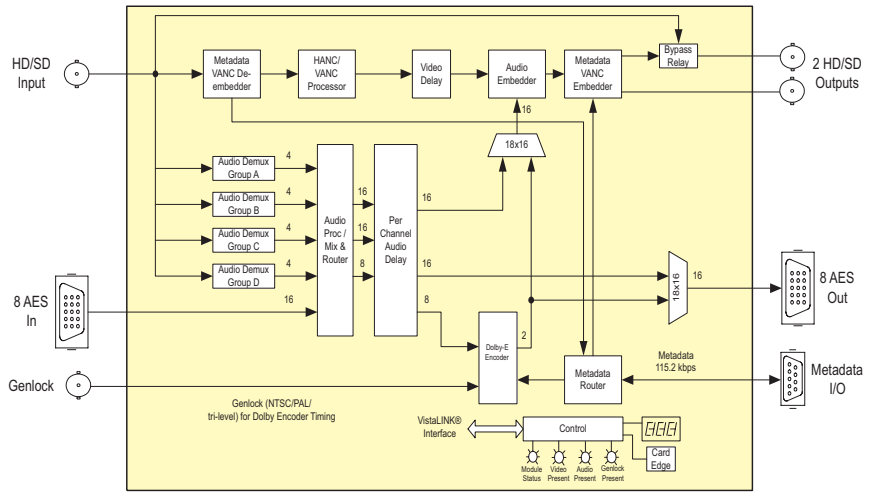

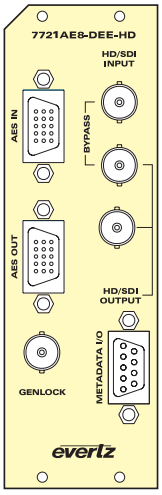

Specifications

Serial Video Input:

Standard:	SMPTE 292M, 1080i/60, 1080i/59.94, 1080i/50, 1080p/30 (sF), 1080p/29.97 (sF), 1080p/25 (sF), 1080p/24 (sF), 1080p/23.98 (sF), 720p/50, 720p/60, 720p/59.94, 1035i/60, 1035i/59.94 SMPTE 259M-C (270Mb/s) 525 or 625 line component
Connector:	BNC per IEC 60169-8 Amendment 2
Equalization:	
HD:	115m @ 1.5Gb/s with Belden 1694A
SD:	300m @ 270Mb/s with Belden 1694A

Processed Serial Video Output:

Standard:	Same as input or user controlled
Number of Outputs:	2
Connector:	BNC per IEC 60169-8 Amendment 2
Signal Level:	800mV nominal
DC Offset:	0V ±0.5V
Rise and Fall Time:	Per standard
Overshoot:	< 10% of amplitude
Wide Band Jitter:	
HD:	< 0.16 UI
SD:	< 0.10 UI

Metadata I/O:

Type:	Dolby E Metadata
Connector:	Female dB-9
Baud Rate:	115,200 baud

AES Audio Input:

Standard:	SMPTE 276M
Number of Inputs:	8 unbalanced
Connector:	Female High Density dB-15 (breakout cable to BNC provided)
Input Level:	0.1 to 2.5V p-p (5V p-p tolerant)
Input Impedance:	75Ω
Return Loss:	> 25dB 100kHz to 6MHz
Equalization:	Automatic to 1000m with Belden 1694A (or equivalent) @ 48kHz AES signal
Sample Rate:	48kHz ±100ppm

AES Audio Output:

Standard:	SMPTE 276M, single ended AES
Number of Outputs:	8 unbalanced
Connector:	Female High Density dB-15 (breakout cable to BNC provided)
Sample Rate:	48kHz
Impedance:	75Ω
Resolution:	Up to 24-bit

Genlock Input:

Type:	NTSC, PAL, black or any tri-level, all autodetect
Connector:	1 BNC per IEC 60169-8 Amendment 2
Impedance:	hi-Z or 75Ω (jumper configurable)
Return Loss:	> 40dB to 10MHz

Electrical:

Voltage:	+12V DC
Power:	21W
EMI/RFI:	Complies with FCC Part 15 Class A, EU EMC Directive

Number of Slots:

7700 frame mounting: 2
7701 frame mounting: 1

Ordering Information

7721AE8-DEE-HD HD/SD-SDI Audio Embedder & Dolby E Encoder

Ordering Options Rear Plate must be specified at time of order
Eg: Model +3RU

Rear Plate Suffix

+3RU	3RU Rear Plate for use with 7700FR-C Multiframe
+1RU	1RU Rear Plate for use with 7701FR Multiframe
+SA	Standalone Enclosure Rear Plate

Accessories

WPAES8-BNCM-6F	Cable (included)

Enclosures

7700FR-C	3RU Multiframe which holds up to 15 single slot modules
7701FR	1RU Multiframe which holds up to 3 single or dual slot modules
S7701FR	Standalone enclosure

The 7721DE4-HD Quad Serial data embedder inserts 4 x RS-232 or RS422 serial data streams and GPI contact closure information into a 270Mb/s SD-SDI or 1.5Gb/s HD-SDI video signal. The RS-232/422 serial data and GPI information are first formatted into an AES audio signal, then embedded into the video stream according to SMPTE 272M-A for SD-SDI and SMPTE 292M for HD-SDI. A data error detection and correction scheme is also applied to maintain data integrity for the data de-embedder at the receiver end. At the embedded packet layer, data packets resemble and have the same group DIDs as embedded audio packets. The data is packetized and inserted into the AES sub-frame according to SMPTE 337M.

Adding the +GPI option to the encoder (model 7721DE4-HD+GPI) allows the user to encode remote control contact closure information in VITC (SD) or RP188 ATC (HD) user bits instead of encoding the GPI information into the AES embedded data stream. This feature allows the user to use the six parallel remote control inputs to set one of the six remote control user bit patterns. At the decoder end the model 7721DD4-HD+GPI Decoder module decodes the remote control user bits and outputs them on six open collector outputs.

Features & Benefits

- Automatic detection of SD-SDI or HD-SDI video input
- 4 x RS232/422 serial inputs with selectable baud rate
- Parity selection: none, even or odd
- Support serial input with BREAK character according to SMPTE 207M
- Packetize data into sub-frame AES format according to SMPTE 337M
- Share the same group DIDs as for embedded audio, selectable from group 1 to 4
- Group selection for mapping data into one of four Audio Groups
- Redundant data transmission to allow data error detection and correction at the receiver end
- Automatically remove the existing embedded packets when the conflict of group DID occurs
- Six GPI inputs to embed simple control information into the video input
- Card edge LEDs indicate video signal and data presence, cable equalization and module fault

Additional Features with +GPI option installed

- Transmits remote control contact closure information in VITC or ATC user bits (instead of encoding the GPI information into AES data)

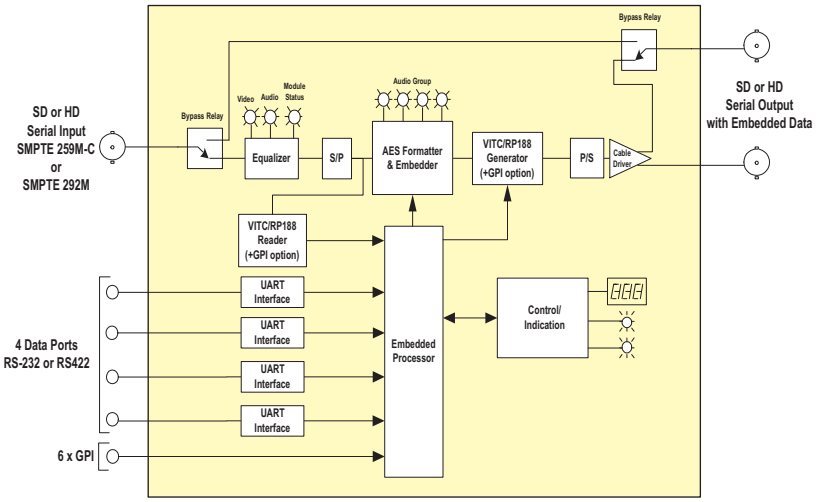

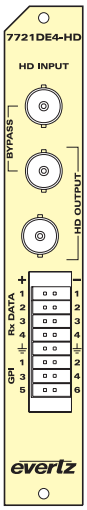

Specifications

Serial Video Input:

Standard:	SMPTE 259M C, SMPTE 292M
Connector:	BNC per IEC 60169-8 Amendment 2
Equalization:	Automatic 300m @ 270Mb/s, 100m @ 1.5Gb/s with Belden 1694A or equivalent cable
Return Loss:	> 15dB up to 1.5Gb/s

Serial Video Outputs with Embedded Data:

Number of Outputs:	2 outputs (1 with bypass relay protected)
Standard:	Same as input
Connectors:	BNC per IEC 60169-8 Amendment 2
Signal Level:	800mV nominal
DC Offset:	0V ±0.5V
Rise and Fall Time:	600ps nominal SD-SDI 200ps nominal HD-SDI
Overshoot:	< 10% of amplitude
Return Loss:	> 15dB up to 1.5Gb/s (Relay Protected) > 10dB up to 1.5Gb/s
Wide Band Jitter:	< 0.2 UI

Data Input:

Standard:	4 x RS-232 or RS-422
Connector:	Terminal Block
Baud Rate:	110, 300, 600, 1200, 2400, 4800, 9600, 14400, 19200, 38400, 57600, or 115200
Format:	8 data bits, parity (none, even or odd), 1 or 2 stop bits

General Purpose Inputs:

Number of Inputs:	6
Type:	Normally open relay contact
Connector:	Terminal Block
Signal Level:	Internal pullup to +5V or +12V nominal (jumper selectable)

Time Code (+GPI OPTION ONLY):

Ancillary Time Code Generator/Reader (ATC) - HD video standards only:

Standard:	SMPTE RP188
Generator Lines:	VITC packets - Line 9, 571; LTC packets - Line 10 as per RP188
Reader Line:	Autodetect

Vertical Interval Time Code Generator/Reader (VITC) - SD video standards only:

Standard:	SMPTE 12M, SMPTE 266M D-VITC
Line Range:	
525i/59.94:	10 to 21
625i/50:	6 to 22
Generator Lines:	Follows input VITC or user selectable when no input VITC
Reader Line:	Autodetect or user-selectable

Embedding Delay:

Video I/O Delay	Approximately 12ms

Delay Embedding Delay - Serial Ports:

Average latency:	1200µs ±20% (All Baud rates)

Delay For Data Embedding - GPI Signals:

Average latency:	20µs ±10%

Delay For Time Code Embedding - GPI signals (+GPI option only):

Encoding latency:	1 frame plus GPI sampling delay (GPI inputs sampled once per frame at beginning of field 1)

Electrical:

Voltage:	+12V DC
Power:	12W
EMI/RFI:	Complies with FCC Part 15, Class A EU EMC Directive

Ordering Information

7721DE4-HD	Quad Serial Data Embedder
Ordering Options	Rear Plate must be specified at time of order Eg: Model +3RU

Rear Plate Suffix

+3RU	3RU Rear Plate for use with 7700FR-C Multiframe
+1RU	1RU Rear Plate for use with 7701FR Multiframe
+SA	Standalone Enclosure Rear Plate

Enclosures

7700FR-C	3RU Multiframe which holds up to 15 single slot modules
7701FR	1RU Multiframe which holds up to 3 single or dual slot modules
S7701FR	Standalone enclosure

7721DD4-HD

HD/SD Quad Data De-embedder

The 7721DD4-HD Quad Serial data de-embedder extracts 4 x RS-232 or RS422 serial data streams and GPI contact closure information from a 270Mb/s SD-SDI or 1.5Gb/s HD-SDI video signal. A data error detection and correction scheme is also applied to maintain data integrity on the output of the data de-embedder. At the embedded packet layer, data packets resemble and have the same group DIDs as embedded audio packets. The data is un-packetized and extracted from the AES sub-frame according to SMPTE 337M.

Adding the +GPI option to the decoder (model 7721DD4-HD+GPI) allows the user to decode remote control contact closure information from VITC (SD) or RP188 ATC (HD) user bits instead of decoding the GPI information from the AES embedded data stream. This feature allows the user to use remote control user bit patterns to control the six GPO relay outputs. At the encoder end the 7721DE4-HD+GPI GPI Encoder module encodes the remote control user bits in VITC or RP188 ATC.

Features & Benefits

- Automatic detection of SD-SDI or HD-SDI video input
- 4 x RS232/422 serial outputs with selectable baud rate
- Parity selection: none, even or odd
- Support serial output with BREAK character according to SMPTE 207M
- Packetize data into sub-frame AES format according to SMPTE 337M
- Share the same group DIDs as for embedded audio, selectable from group 1 to 4
- Group selection for extracting data from one of four Audio Groups
- Redundant data transmission to allow data error detection and correction
- Six GPI outputs to embed simple control information into the video input
- Automatically remove the existing embedded packets when the conflict of group DID occurs
- Card edge LEDs indicate video signal and data presence, cable equalization and module fault

Additional Features with +GPI option installed

- Decodes GPO relay contact closure information from VITC or ATC user bits (instead of decoding the GPI information from AES data)

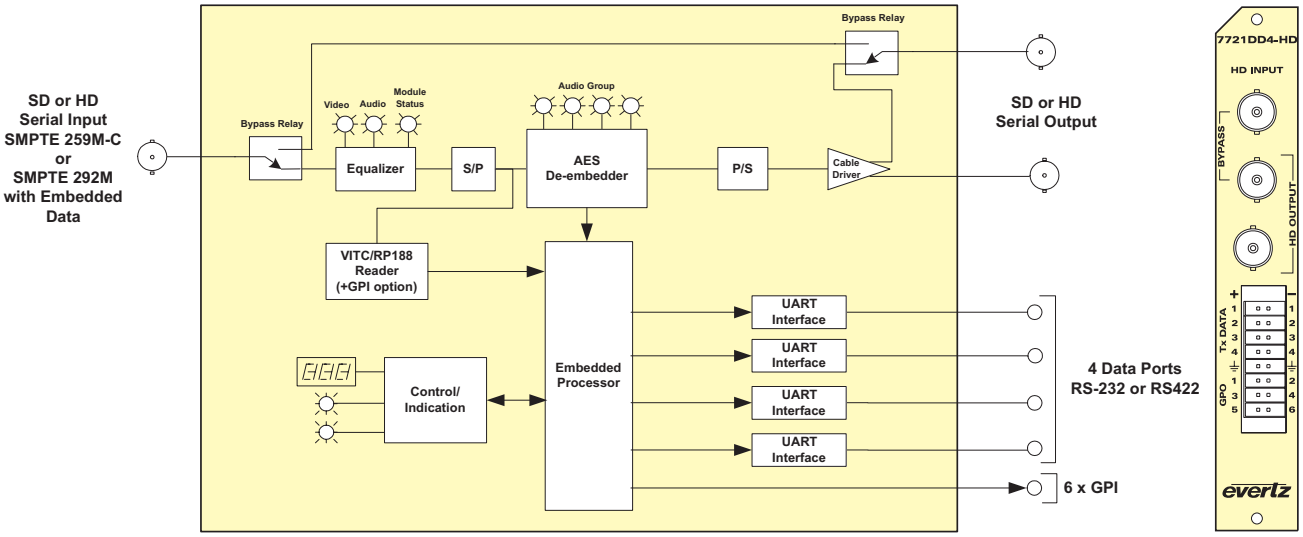

Specifications

Serial Video Input:

Standard:	SMPTE 259M C, SMPTE 292M
Connector:	BNC per IEC 60169-8 Amendment 2
Equalization:	Automatic 300m @ 270Mb/s, 100m @ 1.5Gb/s with Belden 1694A or equivalent cable
Return Loss:	> 15dB up to 1.5Gb/s

Serial Video Outputs with Embedded Data:

Number of Outputs:	2 outputs (1 with bypass relay protected)
Standard:	Same as input
Connectors:	BNC per IEC 60169-8 Amendment 2
Signal Level:	800mV nominal
DC Offset:	0V ±0.5V
Rise and Fall Time:	600ps nominal SD-SDI 200ps nominal HD-SDI
Overshoot:	< 10% of amplitude
Return Loss:	> 15dB up to 1.5Gb/s (Relay Protected) > 10dB up to 1.5Gb/s
Wide Band Jitter:	< 0.2 UI

Data Output:

Standard:	4 x RS-232 or RS-422
Connector:	Terminal Block
Baud Rate:	110, 300, 600, 1200, 2400, 4800, 9600, 14400, 19200, 38400, 57600, or 115200
Format:	8 data bits, parity (none, even or odd), 1 or 2 stop bits

General Purpose Outputs:

Number of Inputs:	6
Type:	Normally open relay contact
Connector:	Terminal Block
Signal Level:	Internal pullup to +5V or +12V nominal (jumper selectable) For other voltages up to 50V DC remove jumper
Max Current :	2A

Time Code (+GPI OPTION ONLY):

Ancillary Time Code Generator/Reader (ATC) - HD video Standards only:

Standard:	SMPTE RP188
Reader Line:	Autodetect

Vertical Interval Time Code Generator/Reader (VITC) - SD video Standards only:

Standard:	SMPTE 12M, SMPTE 266M D-VITC
Line Range:	
525i/59.94:	10 to 21
625i/50:	6 to 22
Reader Line:	Autodetect or user selectable

Embedding Delay:

Video I/O Delay:	Approximately 12ms

Delay De-embedding Delay - Serial Ports:

Average latency (µs):	1200 ±20% (All Baud rates)

Delay For Data De-embedding - GPO Outputs:

Average latency (µs):	1200 ±10%

Delay For Time Code Embedding - GPO Outputs (+GPI option only):

Decoding latency:	1 frame

Electrical:

Voltage:	+12V DC
Power:	12W
EMI/RFI:	Complies with FCC Part 15, Class A EU EMC Directive

Physical:

Number of slots:	1

Ordering Information

7721DD4-HD	Quad Serial Data De-embedder
Ordering Options	Rear Plate must be specified at time of order (Eg: Model +3RU)
+GPI	GPI option for 7721DD4-HD

Rear Plate Suffix

+3RU	3RU Rear Plate for use with 7700FR-C Multiframe
+1RU	1RU Rear Plate for use with 7701FR Multiframe
+SA	Standalone Enclosure Rear Plate

Enclosures

7700FR-C	3RU Multiframe which holds up to 15 single slot modules
7701FR	1RU Multiframe which holds up to 3 single or dual slot modules
S7701FR	Standalone enclosure

The 7730DAC-HD is a professional quality digital to analog converter for HDTV. The 7730DAC-HD supports all signal standards specified in SMPTE 274M and SMPTE 296M.

Card edge control allows the user to select RGB, YPrPb or VGA outputs. User-controlled 4:3 alignment markers also allow for convenient framing of the video signal. The 7730DAC-HD is available in two versions to easily interface to standard broadcast monitors or VGA computer monitors.

Features & Benefits

- Support for all SMPTE 274M and 296M video formats
- Full 10-bit Broadcast quality
- 4:4:4 Interpolated Component Output
- Card edge selectable YPrPb/RGB/VGA outputs
- GPI controllable 4:3 alignment markers
- Optional rear connector plates for use with VGA computer monitors

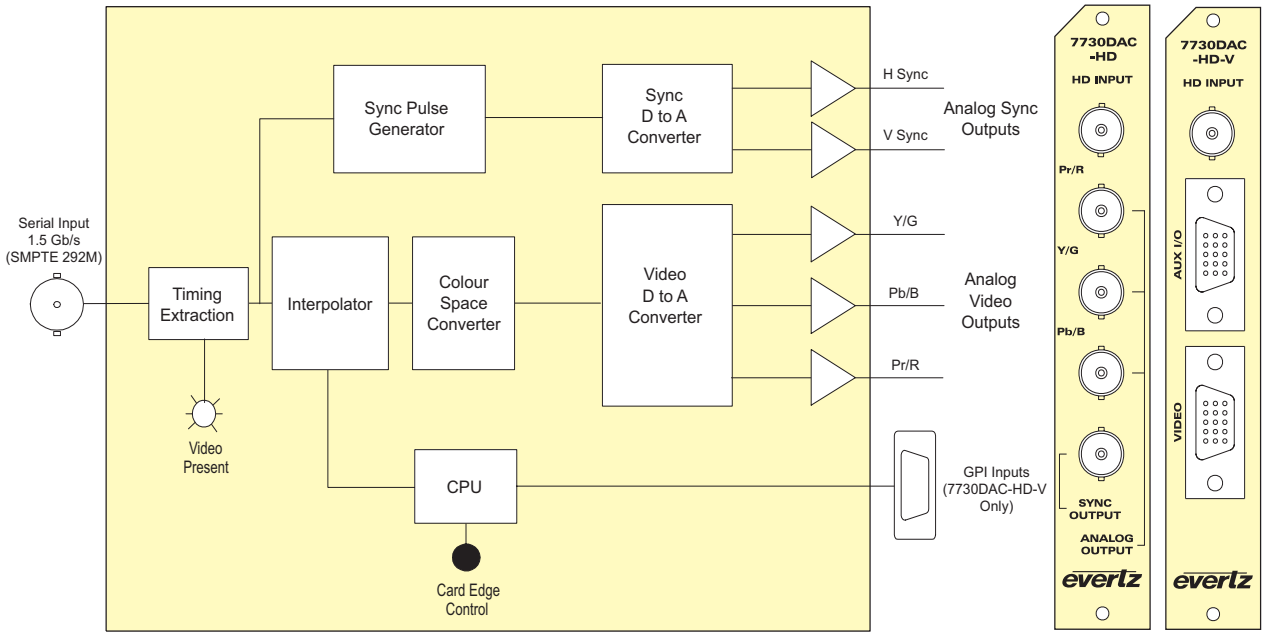

Specifications

Serial Video Input:

Standard:	SMPTE 292M
Connector:	BNC per IEC 60169-8 Amendment 2
Equalization:	Automatic 125m @ 1.5Gb/s with Belden 1694A (or equivalent)

Analog Video Outputs:

Standard:	SMPTE 274M, 296M per nominal
Video:	1V p-p YPrPb/RGB or 0.7V p-p VGA
Sync:	300mV or 4V per nominal
Impedance:	75Ω
Connector:	4 BNC per IEC 60169-8 Amendment 2 (7730DAC-HD) Female High Density DB15 (7730DAC-HD-V)
DC Offset:	0V ±0.1V

General Purpose Inputs (7730DAC-HD-V only):

Number of Inputs:	4
Type:	Opto-isolated, active low with internal pull-ups to Vext pin May be internally jumped to +5V
Connector:	Male High Density dB-15
Signal Level:	+5V nominal

Electrical:

Voltage:	+12V DC
Power:	6W
EMI/RFI:	Complies with FCC Part 15, Class A EU EMC Directive

Physical:

Number of Slots:	1

Ordering Information

7730DAC-HD	HD D to A Converter, YPrPb/RGB +Sync via BNC Outputs

Ordering Options	Rear Plate must be specified at time of order Eg: Model +3RU
+V	VGA output

Rear Plate Suffix

+3RU	3RU Rear Plate for use with 7700FR-C Multiframe
+1RU	1RU Rear Plate for use with 7701FR Multiframe
+SA	Standalone Enclosure Rear Plate

Accessories

WPVGABNC5	VGA to BNC - 6' Monitor Adapter Cable

Enclosures

7700FR-C	3RU Multiframe which holds up to 15 single slot modules
7701FR	1RU Multiframe which holds up to 3 single or dual slot modules
S7701FR	Standalone enclosure

7730DAC, 7730DAC-A4

SDI D to A Component Analog Video Converter

The 7730DAC line of serial digital video to component analog converters are broadcast quality D to As with an extensive list of additional features. High quality digital to analog conversion of audio can be packaged with the video to create a D to A frame synchronizer with audio demux.

In addition, Evertz fault monitoring processing will analyze and report video and audio problems via an On-Screen Display, or remotely via VistaLINK® SNMP.

Features & Benefits

D to A process

- 12-bit, over sampled video DACs
- SMPTE/EBU N10, Betacam, MII and NTSC specific standards supported
- Y, Pb, Pr or G, B, R output format
- Selectable setup pedestal
- Black level and gain controls of all components
- 300mV separate composite sync output

The Features of all 7730DACs are

- SDI 525 or 625, 270Mb/s component digital video input
- One 270Mb/s re-clocked SDI output
- Four output BNCs for Y, Pb, Pr or G, B, R and composite sync
- One composite analog output on BNC for monitoring and control
- One frame video synchronizer (with +S option)
- Infinitely variable output phase (27MHz clock increments)
- Freeze modes: black, freeze, pass
- Menu adjustable free running frequency
- VU/PPM bargraph level Indicators
- Decodes vertical interval time code (VITC), and "burns" the time code into the monitoring output picture
- A comprehensive on-screen display is available to configure the various features of the module
- Flexible configuration of the text and audio bar graph information displays
- An extensive list of error conditions can be monitored and fault conditions can be configured from these conditions
- On-screen messages can be triggered by the configured fault conditions
- VistaLINK® - capable for remote monitoring and control via SNMP (using VistaLINK® PRO) when installed in 7700FR-C frame with 7700FC VistaLINK® Frame Controller

The Features of "-A4" option are

- One group (4 channels) of synchronous 20-bit audio is de-multiplexed from the incoming digital video
- 2 unbalanced AES audio inputs (up to 48kHz, 24 bits) on BNC
- User selects either the de-embedded audio or the input AES audio
- The selected audio is delayed equivalently to the video delay with the +S option
- 4 high quality 24 bit audio channels are output (analog) as balanced on 2 removable barrier strips
- Low impedance outputs (66Ω)
- Analog audio output levels are adjustable
- Additional audio delay of up to 5 seconds
- Additional audio advance of up to 1 frame, depending on video delay
- Loss of video modes: pass audio, mute audio

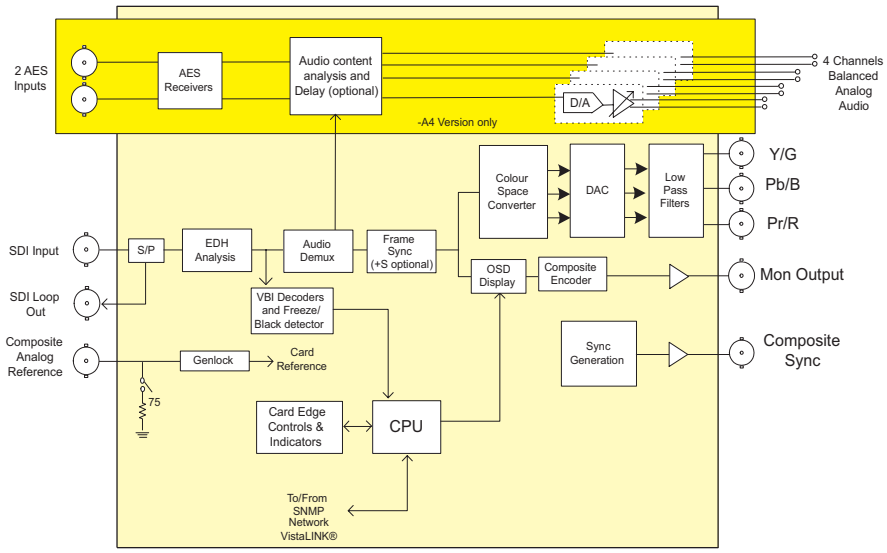

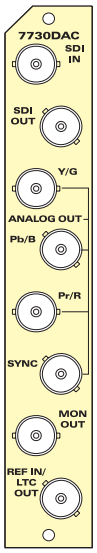

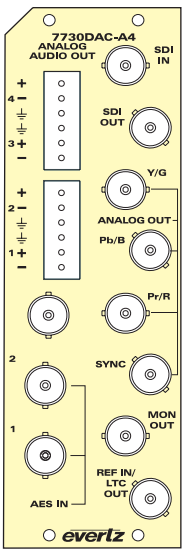

Specifications

Serial Video Input:
Standard: SMPTE 259M-C - 525 or 625 line component
Number of Inputs: 1
Number of Reclocked Outputs: 1
Connector: BNC per IEC 60169-8 Amendment 2
Return Loss: > 15dB to 270MHz
Embedded Audio: SMPTE 272M-A
Frequency Lock Range: ±75ppm from nominal

Analog Video Output:
Standards: SMPTE/EBU N10, Betacam, MII and NTSC specific standards. GBR or YPbPr formats with or without setup
Number of outputs: 1
Connectors: 4 BNCs per IEC 169-8
Video signal Level: 1V nominal
Sync signal Level: 300mV nominal
Output level control range: > ±7.5% (All components)
Black level control range: ±10 IRE
Input Impedance: 75Ω
Return loss: > 40dB to 10MHz

Reference Video Input:
Standard: NTSC, SMPTE 170M PAL, ITU624-4
Number of Inputs: 1
Connector: BNC per IEC 60169-8 Amendment 2
Signal Level: 1V nominal
Frequency Lock Range: ±75ppm from nominal
Input Impedance: 75Ω or High impedance (jumper selectable)
Return Loss: > 35dB to 10MHz

Video Performance:
Frequency Response: < ±0.1dB (100kHz to 4.1MHz)
Noise Floor: < -73dBms (15kHz to 5MHz)
Inter-channel Delay: < ±5ns
Minimum Delay: 3µs
Maximum Delay: 1 frame plus 3µs

Analog Audio Outputs (-A4 only):
Number of Outputs: 4
Type: Balanced analog audio
Connector: Two 6-pin removable terminal strips
Output Impedance: 66Ω balanced
Sampling Frequency: 48kHz
Signal Level: 0dBFS ⇨ 12 to 25dBu (user-settable)
Frequency Response: < ±0.05dB (20Hz to 20kHz)
Dynamic range: 24 bits when AES inputs selected, 20 bits when embedded audio selected
THD+N: < 0.001% (> 100dB) @ 1kHz, -1dBFS
Crosstalk: < -105dB (20Hz to 20kHz)
DC Offset: < ±30mV
SNR: > 110dB "A" Weighting
Inter-Channel Phase Error: < ±1° (20Hz to 20kHz)

AES Audio Inputs (-A4 only):
Number of Inputs: 2
Input Standard: SMPTE 276M, single-ended synchronous or asynchronous PCM AES
Connector: BNC per IEC 60169-8 Amendment 2
Resolution: 24 bits when AES inputs selected, 20 bits when embedded audio is selected
Input Sampling Rate: 32kHz to 48kHz when AES inputs selected, Synchronous 48kHz when embedded audio is selected
Minimum I/O Delay: 3.5ms

Electrical:
Voltage: +12V DC
Power: 10W DAC + 7.5W (-A4 option) = 17.5 W

EMI/RFI: Complies with FCC Part 15, Class A
EU EMC Directive

Physical:
7700 frame mounting:
Number of slots: 1 for non-audio versions
2 for audio versions (-A4)

Stand Alone Enclosure:
Dimensions: 14" L x 4.5" W x 1.9" H (355mm L x 114mm W x 48mm H)
Weight: Approx. 1.5lbs (0.7kg)

Ordering Information

7730DAC: SDI D to A Component Analog Video Converter
7730DAC-A4: SDI D to A Component Analog Video Converter with a four-channel Analog Audio converter/embedder

Ordering Options Rear Plate must be specified at time of order
Eg: Model +3RU

+S Optional frame synchronizer

Rear Plate Suffix
+3RU 3RU Rear Plate for use with 7700FR-C Multiframe
+1RU 1RU Rear Plate for use with 7701FR Multiframe
+SA Standalone Enclosure Rear Plate

Enclosures
7700FR-C 3RU Multiframe which holds up to 15 single slot modules
7701FR 1RU Multiframe which holds up to 3 single or dual slot modules
S7701FR Standalone enclosure

7730ADC, 7730ADC-A4

Component Analog Video to SDI Converter

The 7730ADC line of component analog video to serial digital converters are broadcast quality A to Ds with an extensive list of additional features. High quality analog to digital conversion of audio inputs can be packaged with the video to create an A to D frame synchronizer with audio embedder.

In addition, Evertz fault monitoring processing will analyze and report video and audio problems via an On-Screen Display, or remotely via VistaLINK® SNMP. The 7730ADC (1 slot module) and the 7730ADC-A4 (2 slot module) are housed in the 7700FR-C (15 slots) or in the 7701FR Multiframe (houses 3 modules).

Features & Benefits

A to D process

- 10 bit, 54MHz sampling of input video
- Internal processing to maintain 10 bit digital video quality
- Y, Pb, Pr or G, B, R input support
- Black level clamp on all components
- User-adjustable input video processing functions: black level control on all 3 components, gain control on all 3 components, inter-channel delay control in 18ns increments
- Sync on green or separate sync input
- 300mV or 4V separate sync support

Features of all 7730ADCs are

- Three input BNCs for YPbPr or RGB input
- One sync input BNC for separate sync
- Two SDI 525 or 625, 270Mb/s component digital video output Without OSD text or audio bargraphs
- One combination output that can either be an extra SDI output or composite analog video output
- When configured as a composite analog output it can either be a clean output (no OSD), or have the OSD text and bargraph graphics for monitoring
- EDH encoding on SDI output
- One combination input BNC that can either be an LTC input or a composite analog reference input (NTSC or PAL-B)
- 75Ω or high-Z, jumper configurable input impedance
- One frame video synchronizer (with +S option)
- Infinitely variable output phase (27MHz clock increments)
- Freeze modes: black, freeze, pass
- Menu adjustable free running frequency
- VU/PPM bargraph level Indicators
- Decodes vertical interval time code (VITC) and "burns" the time code into the OSD Monitoring output
- A comprehensive on-screen display is available to configure the various features of the module
- Flexible configuration of the text and audio bar graph information displays
- An extensive list of error conditions can be monitored and fault conditions can be configured from these conditions
- On-screen messages can be triggered by the configured fault conditions
- Fault conditions are reported via VistaLINK® SNMP
- VistaLINK® - capable for remote monitoring and control via SNMP (using VistaLINK® PRO) when installed in 7700FR-C frame with 7700FC VistaLINK® Frame Controller

Features of -A4 option are

- 4 balanced analog audio inputs on 2 removable barrier strips
- High impedance inputs (user supplies termination resistors for other impedances)
- Analog audio input levels are adjustable
- Jumpers set coarse input levels, fine input levels are set by software control
- Audio delay equivalent video delay (with +S option)
- Additional audio delay of up to 5 seconds
- Audio advance of up to 1 frame less 3 microseconds
- One group (4 channels of audio) is multiplexed on the outgoing digital video
- 2 unbalanced AES audio outputs delayed equivalently to the video delay
- 75Ω coaxial (unbalanced) DARS reference input on BNC
- Loss of video modes: pass audio, mute audio

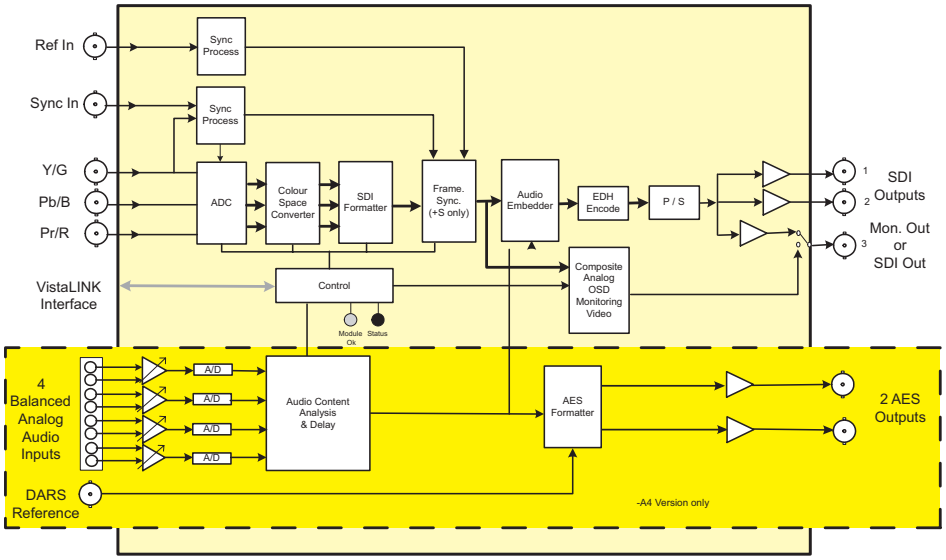

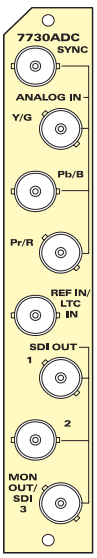

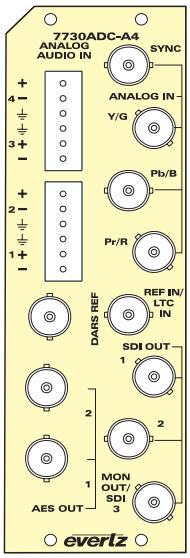

Specifications

Analog Video Input:
Standard: Y, Pb, Pr or G, B, R : SMPTE/EBU N10, Betacam™, MII, and other NTSC related
Number of Inputs: 1
Connector: BNC per IEC 60169-8 Amendment 2
Signal Level: 1V nominal
Frequency Lock Range: ±75ppm from nominal
Input level control range: ±15%
Black level control range: ±5 IRE
Input Impedance: 75Ω
Return Loss: > 30dB to 30MHz

Reference Video Input:
Standard: NTSC (SMPTE 170M), PAL (ITU624-4)
Number of Inputs: 1
Connector: BNC per IEC 60169-8 Amendment 2
Signal Level: 1V nominal
Frequency Lock Range: ±75ppm from nominal
Input Impedance: 75Ω or High impedance (jumper selectable)
Return Loss: > 35dB to 10MHz

Analog Video Output:
Standard: NTSC (SMPTE 170M), PAL (ITU624-4)
Number of Outputs: 1
Connector: BNC per IEC 60169-8 Amendment 2
Signal Level: 1V nominal
Output Impedance: 75Ω
Return Loss: > 35dB to 10MHz

Serial Video Output:
Standard: SMPTE 259M-C - 525 or 625 line component
Number of Outputs: 3
Connector: BNC per IEC 60169-8 Amendment 2
Signal Level: 800mV nominal
DC Offset: 0V ±0.5V
Rise and Fall Time: 900ps nominal
Overshoot: < 10% of amplitude
Return Loss: > 15dB to 270MHz
Embedded Audio: SMPTE 272M-A

Video Performance (SDI outputs only):
Inter-channel Delay: < ±9ns
Minimum Delay: 3µs
Maximum Delay: 1 frame plus 3µs

Analog Audio Input (-A4 only):
Number of Inputs: 4
Type: Balanced analog audio
Connector: Removable terminal strip
Input Impedance: 20kΩ minimum (differential)
Sampling Frequency: 48kHz
Signal Level: 0dB FS ⇨ 18 or 24dBu (jumper selectable)
Level Control Range: ±10dB
Frequency Response: ±0.1dB (20Hz to 20kHz) (broadcast quality)
SNR: 100dB with input at -0.5dBFS
THD+N: < 0.001% (> 100dB) @ 20Hz to 20kHz, -0.5dB FS (input video locked to genlock video)
CMRR: > 100dB @ 1kHz

AES Outputs (-A4 only):
Number of Outputs: 2
Output Standard: SMPTE 276M, single-ended synchronous AES 48kHz
Connectors: BNC per IEC 60169-8 Amendment 2
Resolution: 24 bits
Sampling Rate: Synchronous 48kHz
User Bits: Transferred to output in a non-real-time, non-block-contiguous manner
Minimum I/O Delay: 2.1ms
Maximum I/O Delay: 5 seconds

Electrical:
Voltage: +12V DC
Power: 11W A DC +9W (-A4 option) = 20W total
EMI/RFI: Complies with FCC Part 15, class A EU EMC Directive

Physical:
7700 frame mounting:
Number of slots: 1 for non-audio versions
2 for audio version (-A4)
Stand Alone Enclosure:
Dimensions: 14" L x 4.5" W x 1.9" H (355mm L x 114mm W x 48mm H)
Weight: Approx. 1.5lbs (0.7kg)

Ordering Information

7730ADC	Component Analog Video to SDI Converter
7730ADC-A4	Component Analog Video to SDI Converter with a four-channel Analog Audio Converter/Embedder

Ordering Options Rear Plate must be specified at time of order
Eg: Model +3RU

+S Optional frame synchronizer

Rear Plate Suffix
+3RU 3RU Rear Plate for use with 7700FR-C Multiframe
+1RU 1RU Rear Plate for use with 7701FR Multiframe
+SA Standalone Enclosure Rear Plate

Enclosures
7700FR-C 3RU Multiframe which holds up to 15 single slot modules
7701FR 1RU Multiframe which holds up to 3 single or dual slot modules
S7701FR Standalone enclosure

7730ADC-HD, 7730ADC-A4-HD

HD Component Analog Video to HD SDI Converter

The 7730ADC-HD line of component analog video to serial digital converters are broadcast quality high definition A to Ds with an extensive list of additional features. High quality analog to digital conversion of audio or AES inputs can be packaged with the video to create an A to D with audio embedder.

In addition, Evertz fault monitoring processing will analyze and report video and audio problems via an On-Screen Display, or remotely via VistaLINK® SNMP.

Features & Benefits

The Features of the A to D process

- 10 bit, 74.25MHz (/1.001) sampling of input video
- Internal processing to maintain 10 bit digital video quality
- Y, Pb, Pr or G, B, R input support
- Black level clamp on all components
- User-adjustable input video processing functions: black level control on all components, gain control on all components, inter-channel delay and picture position control in 13.5ns increments
- Sync on green or separate sync input

The Features of all 7730ADC-HDs are

- Three input BNCs for Y, Pb, Pr or G, B, R input
- One sync input BNC for separate sync
- Two HD SDI 74.25 or 74.176Mb/s component digital video output without OSD text or audio bargraphs
- One combination output that can either be an extra HD SDI output or composite analog video output
- When configured as a composite analog output it will be a clean output (no picture), and have the OSD text and bargraph graphics for monitoring
- One line video synchronizer
- Variable output phase (in clock increments)
- Loss of video modes: black, pass
- A comprehensive on-screen display is available to configure the various features of the module
- VistaLINK® - capable for remote monitoring and control via SNMP (using VistaLINK® PRO) when installed in 7700FR-C frame with 7700FC VistaLINK® Frame Controller

The Features of "-A4" option are

- 4 balanced analog audio inputs on 2 removable barrier strips
- High impedance inputs (user supplies termination resistors for other impedances)
- Analog audio input levels are adjustable
- Jumpers set coarse input levels, fine input levels are set by software control
- Audio delay of up to 5 seconds
- One group (4 channels of audio) is multiplexed on the outgoing digital video
- 2 unbalanced AES audio outputs delayed equivalently to the embedded audio delay
- 75Ω coaxial (unbalanced) DARS reference input on BNC
- Loss of video modes: pass audio, mute audio

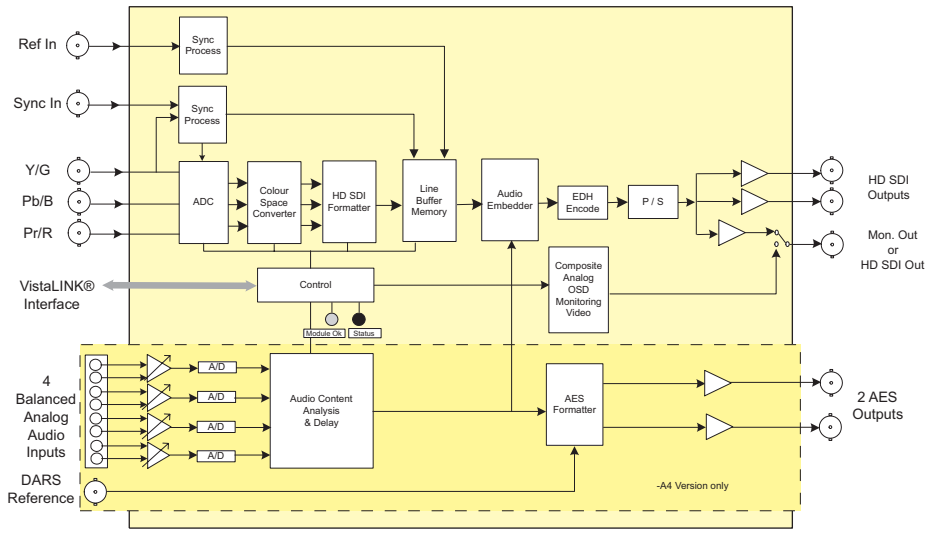

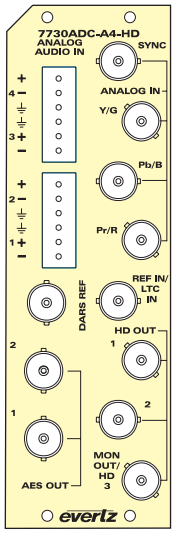

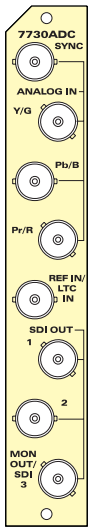

Specifications

Analog Video Input:

Standard:	SMPTE 274M, 296M (analog), 1080i/59.94, 720p/59.94, 1080i/50
Input formats:	GBR or YPbPr
Number of Inputs:	1
Connector:	BNC per IEC 60169-8 Amendment 2
Signal Level:	1V nominal
Freq. Lock Range:	±75ppm from nominal
Input level control range:	> ±15%
Black level control range:	> ±10 IRE
Input Impedance:	75Ω
Return Loss:	> 30dB to 30MHz

Reference Video Input:

Standard:	Tri-level sync, analog SMPTE 274M, 296M NTSC (SMPTE 170M), PAL (ITU624-4)
Number of Inputs:	1
Connector:	BNC per IEC 60169-8 Amendment 2
Signal Level:	1V nominal
Freq. Lock Range:	±75ppm from nominal
Input Impedance:	75Ω or High impedance (jumper selectable)
Return Loss:	> 35dB to 10MHz

Monitoring Analog Video Output:

Standard:	NTSC, SMPTE 170M PAL, ITU624-4
Number of Outputs:	1
Connector:	BNC per IEC 60169-8 Amendment 2
Signal Level:	1V nominal
Output Impedance:	75Ω
Return Loss:	> 30dB to 10MHz

Serial Video Output:

Standard:	SMPTE 292M (274M, 296M)
Number of Outputs:	2+1
Connector:	BNC per IEC 60169-8 Amendment 2
Signal Level:	800mV nominal
DC Offset:	0V ±0.5V
Rise and Fall Time:	180ps nominal
Overshoot:	< 10% of amplitude
Return Loss:	> 13dB to 1.5GHz
Embedded Audio:	SMPTE 299M

Video Performance (HD SDI outputs only):

Freq. Response:	(Y, Pb, Pr input)
Y:	< ±0.05dB to 30MHz
Cb, Cr:	< ±0.05dB to 15MHz
Inter-channel Delay:	< ±5ns
Minimum Delay:	0.5µs
Maximum Delay:	1 line plus 0.5µs

Analog Audio Input(-A4 only):

Number of Inputs:	4
Type:	Balanced analog audio
Connector:	Removable terminal strip
Input Impedance:	20kΩ minimum (differential)
Sampling Frequency:	48kHz
Signal Level:	0dB FS => 18 or 24dBu (jumper selectable)
Level Control Range:	±10dB
Freq. Response:	±0.1dB (20Hz to 20kHz) (broadcast quality)
SNR:	100dB with input at -0.5dBFS
THD+N:	< 0.001% (> 100dB) @ 1kHz, -0.5dB FS (rev 2) < 0.001% (> 100dB) @ 20Hz to 20kHz, -0.5dB FS (input video locked to genlock video)
CMRR:	> 100dB @ 1kHz

AES Outputs (-A4 only):

Number of Outputs:	2
Output Standard:	SMPTE 276M, single ended synchronous AES 48kHz
Connectors:	BNC per IEC 60169-8 Amendment 2
Resolution:	24 bits
Sampling Rate:	Synchronous 48kHz
User Bits:	Transferred to output in a non-real-time, non-block-contiguous manner
Minimum I/O Delay:	2.1ms
Maximum I/O Delay:	5 seconds

Electrical:

Voltage:	+12V DC
Power:	14W A DC + 9W (-A4 option) = 23 W
EMI/RFI:	Complies with FCC Part 15, Class A EU EMC Directive

Physical:

7700 frame mounting:

Number of slots:	1 for non-audio versions 2 for audio versions (-A4)

Stand Alone Enclosure:

Dimensions:	14" L x 4.5" W x 1.9" H 355mm L x 114mm W x 48mm H)
Weight:	Approx. 1.5lbs (0.7kg)

Ordering Information

7730ADC-HD	HD Component Analog Video to HD SDI Converter
7730ADC-A4-HD	HD Component Analog Video to HD SDI Converter with a four-channel Analog Audio converter/embedder

Ordering Options Rear Plate must be specified at time of order
Eg: Model +3RU

Rear Plate Suffix

+3RU	3RU Rear Plate for use with 7700FR-C Multiframe
+1RU	1RU Rear Plate for use with 7701FR Multiframe
+SA	Standalone Enclosure Rear Plate

Enclosures

7700FR-C	3RU Multiframe which holds up to 15 single slot modules
7701FR	1RU Multiframe which holds up to 3 single or dual slot modules
S7701FR	Standalone enclosure

7736CEM, 7736CEM-A4

Component SDI to Composite Analog Video Encoder with Optional Frame Synchronizer

The 7736CEM line of component serial digital to composite analog video converters are broadcast quality encoders with an extensive list of additional features. An audio de-embedder with high quality audio digital to analog conversion can be packaged with the encoder to create a video/audio frame synchronizer/conversion package.

The 7736CEM product features various video processing functions such as VITC, closed captioning and SID extraction during the encoding process, as well as monitoring video for black and freeze conditions. The modules feature a clean (asynchronous) and a fast (synchronous) input video lock mode to handle upstream switches.

The audio is processed, to extract level information for creating and displaying level and phase bar graphs. In addition, the audio is analyzed for periods of high level, silence, mono, and out-of-phase conditions. All of this status information is displayed on the monitoring analog output via on-screen display (OSD) overlay.

VistaLINK® enables remote monitoring, control and configuration capabilities via Simple Network Management Protocol (SNMP). This offers the flexibility to manage operations including signal monitoring and module configuration from SNMP - enabled control systems (Manager or NMS) locally or remotely.

Features & Benefits

- One component serial digital input (525 or 625)
- One re-clocked component serial digital output
- EDH analysis on SDI input
- Four composite analog video outputs WITHOUT OSD text or audio bargraphs
- Internal processing to maintain 10-bit digital video quality
- 12-bit output video digital to analog conversion
- One monitoring quality video output with OSD text and bargraph graphics
- User-adjustable output video processing functions: black level (brightness), gain (contrast), hue, and saturation
- User-selectable luminance and chrominance filters for different applications (i.e. broadcast vs. studio)
- User-selectable horizontal blanking interval width: narrow, normal
- One composite analog reference input (NTSC or PAL-B) on BNC 75Ω or high-Z, jumper configurable input impedance
- One frame video synchronizer (with +S option)
- Infinitely variable output phase
- Freeze modes: black, freeze
- Input video lock mode: clean or fast
- Adjustable free running frequency
- Built-in color bar generator
- VU/PPM bargraph level Indicators
- Decodes vertical interval time code (VITC) and "burns" the time code into the picture
- Decodes PESA format Source ID (8 characters) or Evertz format VITC Source ID (5 or 9 characters) and burns the ID into the picture
- A comprehensive on-screen display is available to configure the various features of the module
- Flexible configuration of the text and audio bar graph information displays
- An extensive list of error conditions can be monitored and fault conditions can be configured from these conditions
- On-screen messages can be triggered by the configured fault conditions
- VistaLINK® - capable for remote monitoring and control via SNMP (using VistaLINK® PRO, 9000NCP or 9000NCP2 Network Control Panel) when installed in 7700FR-C frame with 7700FC VistaLINK® Frame Controller

Features of "-A4" version are:

- One group (4 channels) of synchronous 20-bit audio is de-multiplexed from the incoming digital video
- 2 unbalanced AES audio inputs (up to 48kHz, 24 bits) on BNC terminal strip
- User selects either the de-embedded audio or the input AES audio
- The selected audio is delayed equivalently to the video delay with the +S option
- 4 high quality 24-bit audio channels are output (analog) as balanced on 2 removable barrier strips
- Low impedance outputs (66Ω)
- Analog audio output levels are adjustable
- Additional audio delay of up to 5 seconds
- Additional audio advance of up to 1 frame, depending on video delay
- Loss of video modes: pass audio, mute audio
- Optional balanced AES audio inputs (+B option)

7736CEM

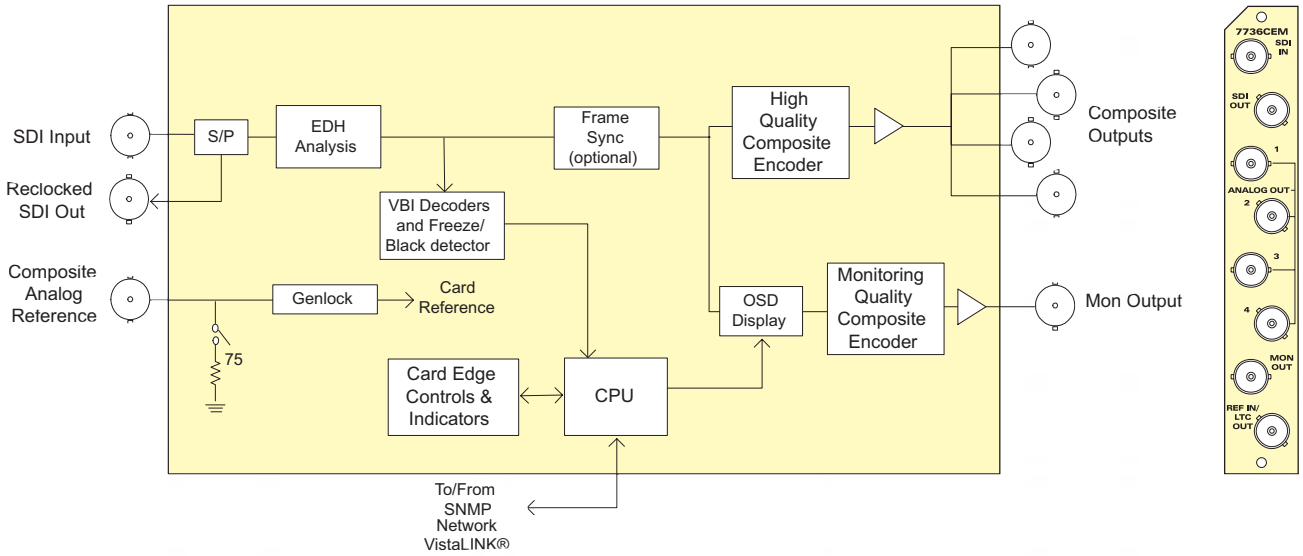

7736CEM-A4

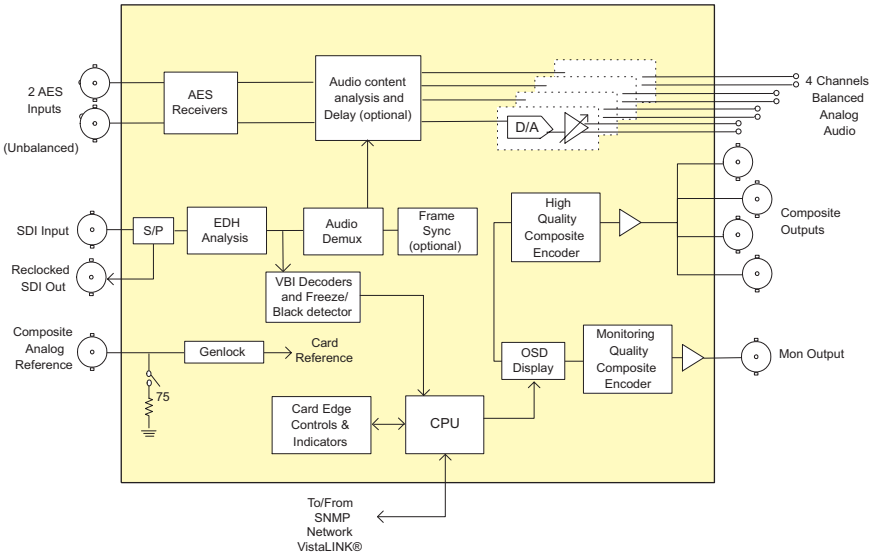

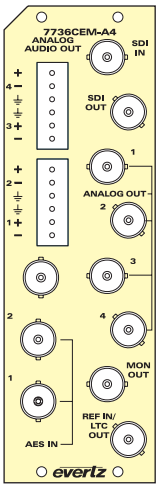

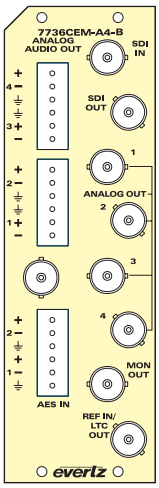

Specifications

Serial Video Input:
Standard: SMPTE 259M-C - 525 or 625 line component
Number of Inputs: 1
Number of Reclocked Inputs: 1
Connector: BNC per IEC 60169-8 Amendment 2
Signal Level: 800mV nominal
DC Offset: 0V ±0.5V
Rise and Fall Time: 900ps nominal
Overshoot: < 10% of amplitude
Return Loss: > 15dB to 270MHz
Embedded Audio: SMPTE 272M-A
Frequency Lock Range: ±75ppm from nominal
Lock up time on a hot switch: None or 7 frames (based on lock mode)

Analog Broadcast Video Output:
Standard: NTSC, SMPTE 170M PAL, ITU624-4
Number of Inputs: 4
Connector: BNC per IEC 60169-8 Amendment 2
Signal Level: 1V nominal
Output Impedance: 75Ω
DC Offset: 0V ±50mV
Return Loss: > 35dB to 10MHz
Frequency Response: 0.1dB to 4MHz (response will depend on selected filtering)
Differential Phase: < 0.5° (< 0.3° typical)
Differential Gain: < 0.5% (< 0.3% typical)
SNR: > 75dB (black video, 100kHz to 5MHz)
Output level control range: ±10%
Black level control range: ±7.5 IRE
Chroma level control range: ±10%
Hue control range: ±15° (NTSC only)
Minimum Delay: 3µs
Maximum Delay: 1 frame +3µs (+S option only)

Reference Video Input:
Standard: NTSC, SMPTE 170M PAL, ITU624-4
Number of Inputs: 1
Connector: BNC per IEC 60169-8 Amendment 2
Signal Level: 1V nominal (0.5V to 1.5V)
Frequency Lock Range: ±75ppm from nominal
Input Impedance: 75Ω or High impedance (jumper selectable)
Return Loss: > 25dB to 10MHz
Max Subcarrier Jitter: < 3°
Free-Running Frequency Control Range: > ±10 ppm (> ±270Hz)

Analog Monitoring Video Output:
Standard: NTSC, SMPTE 170M PAL, ITU624-4
Number of Outputs: 1
Connector: BNC per IEC 60169-8 Amendment 2
Signal Level: 1V nominal
Output Impedance: 75Ω
Return Loss: > 35dB to 10MHz

Analog Audio Outputs (-A4 version only):
Number of Outputs: 4
Type: Balanced analog audio
Connector: Two 6-pin removable terminal strips
Output Impedance: 66Ω balanced
Sampling Frequency: 48kHz
Signal Level: 0dBFS ⇨ 12 to 25dBu (user-settable)
Frequency Response: < ±0.05dB (20Hz to 20kHz)
Dynamic range: 24 bits when AES inputs selected, 20 bits when embedded audio selected
THD+N: < 0.001% (> 100dB) @ 1kHz, -1dBFS
Crosstalk: < -105dB (20Hz to 20kHz)
DC Offset: < ±30mV
SNR: > 110dB "A" Weighting
Inter-Channel Phase Error: < ±1° (20Hz to 20kHz)

Unbalanced AES Audio Inputs (-A4 version only):
Number of Inputs: 2
Input Standard: SMPTE 276M, single ended synchronous or asynchronous PCM AES
Connector: BNC per IEC 60169-8 Amendment 2
Resolution: 24 bits when AES inputs selected, 20 bits when embedded audio is selected
Input Sampling Rate: 32kHz to 48kHz when AES inputs selected, Synchronous 48kHz when embedded audio is selected
Minimum I/O Delay: 3.5µs

Balanced AES Audio Inputs (+B option):
Number of Inputs: 2
Input Standard: AES3-1992, balanced synchronous or asynchronous PCM AES
Connectors: One 6-pin removable terminal strip
Impedance: 110Ω
Resolution: Up to 24 bits
Sampling Rate: 32kHz to 48kHz
Input Level: 2V to 7V p-p
Minimum I/O Delay: 3.5ms

Electrical:
Voltage: +12V DC
Power: 9.25W CEM + 16.75W (-A4 or +B option)
EMI/RFI: Complies with FCC Part 15, Class A EU EMC Directive

Physical:
7700 frame mounting: 2
7701 frame mounting: 1

Ordering Information

7736CEM	Component SDI to composite analog video encoder (optional Frame Synchronizer available)
7736CEM-A4	Component SDI to composite analog video encoder with quad audio DAC (audio source is embedded or from dual unbalanced AES inputs) (optional Frame Synchronizer available)

Ordering Options Rear Plate must be specified at time of order
Eg: Model +3RU

+B	Balanced audio on 7736CEM-A4
+S	Optional frame synchronizer

Rear Plate Suffix

+3RU	3RU Rear Plate for use with 7700FR-Multiframe
+1RU	1RU Rear Plate for use with 7701FR Multiframe
+SA	Standalone Enclosure Rear Plate

Accessories

7700FC	VistaLINK® Frame Controller
9000NCP	1RU VistaLINK® General Purpose Network Control Panel
9000NCP2	2RU VistaLINK® General Purpose Network Control Panel

Enclosures

7700FR-C	3RU Multiframe which holds up to 15 single slot modules
7701FR	1RU Multiframe which holds up to 3 single or dual slot modules
S7701FR	Standalone enclosure

7736CE2, 7736CE2-A4, 7736CE2-A8

Dual Composite Encoder

The 7736CE2 series of modules are broadcast quality component serial digital to composite analog video converters with an extensive list of advanced features. The 7736CE2-A4 and 7736CE2-A8 versions offer respectively four (two per encoding channel) or eight (four per encoding channel) high quality audio digital to analog converters that can be driven from discrete AES inputs or audio embedded within the video input signal. The module features a clean (asynchronous) and a fast (synchronous) input video lock modes to handle upstream switches. In addition, control of card is via an On-Screen-Display or remotely via VistaLINK®.

Features & Benefits

- Two component serial digital inputs (525 or 625)
- One composite analog video output per channel WITHOUT OSD text
- Internal processing to maintain 10 bit digital video quality
- 12 bit output video digital to analog conversion
- One monitoring quality video output with OSD for card configuration
- User adjustable output video processing functions: black level (brightness), gain (contrast), hue, and saturation
- User selectable luminance and chrominance filters for different applications (i.e. broadcast vs. studio)
- User selectable horizontal blanking interval width (narrow or normal)
- One composite analog reference input (NTSC or PAL-B) on BNC 75Ω or high-Z, (jumper configurable) input impedance
- Video Frame synchronizer (with +S option)
- Infinitely variable output phase
- Freeze modes: black, freeze
- Input video lock mode: clean or fast
- Adjustable free running frequency. Both channels must be free running to be able to adjust frequency
- A comprehensive on screen display for module config

The Features of "-A4" and the "-A8" Options:

7736CE2-A4 (per video channel)

- One half group (2 channels) of synchronous 20-bit audio may be de-multiplexed from the incoming digital video
- 1 unbalanced (or balanced) AES audio input (up to 48kHz, 24 bits) on BNC (or terminal strip for balanced audio)
- 2 high quality 24 bit audio channels are converted to balanced analog on 2 removable barrier strips

7736CE2-A8 (per video channel)

- One full group (4 channels) of synchronous 20-bit audio may de-multiplexed from the incoming digital video
- 2 unbalanced AES audio input (48kHz, 24 bits) supplied via 15dB
- 4 high quality 24 bit audio channels are converted to balanced analog on 2 removable barrier strips

7736CE2-A4 and 7736CE2-A8

- User selects EITHER the de-embedded audio or the input AES audio
- Audio delay tracks the video delay with the (+S option)
- Low impedance outputs (66Ω)
- Analog audio output levels are adjustable
- Additional audio delay of up to 2.5 seconds
- Audio advance of up to 1 frame, depending on video delay
- Loss of video modes: pass audio, mute audio

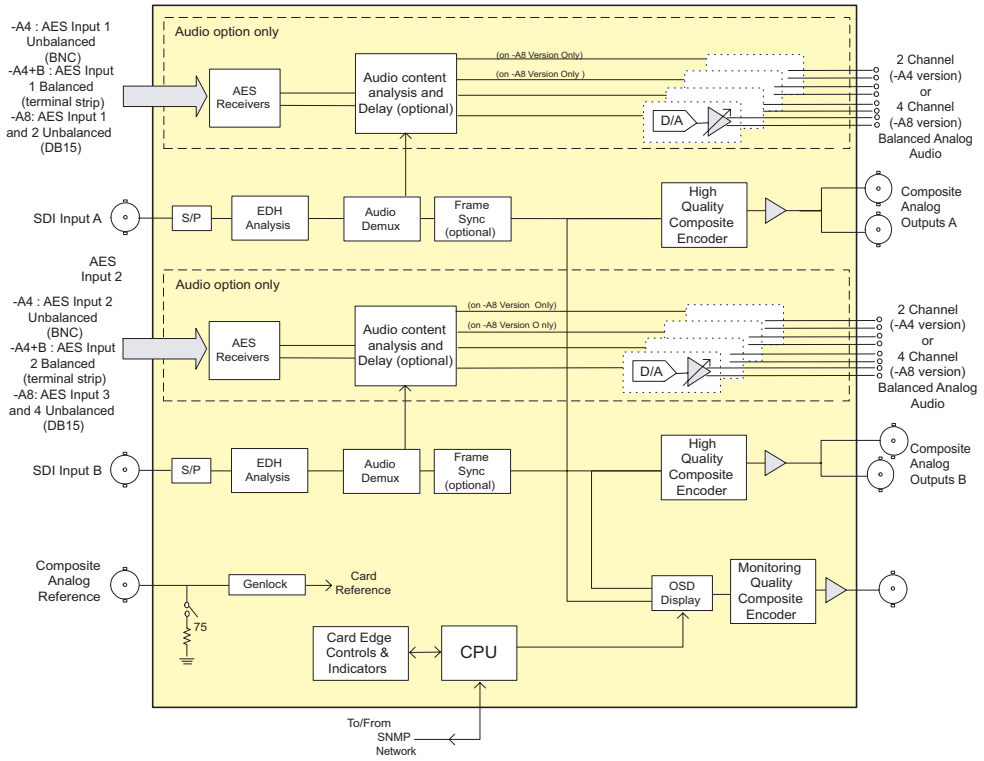

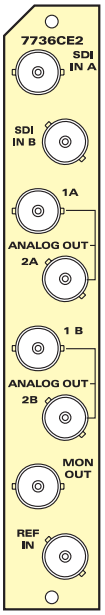

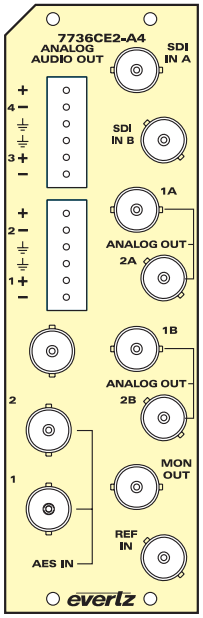

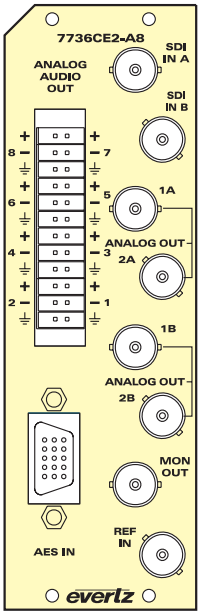

Specifications

Serial Video Input:

Standard:	SMPTE 259M-C - 525 or 625 line component
Number of Inputs:	2
Connector:	BNC per IEC 60169-8 Amendment 2
Return Loss:	> 15dB to 270MHz
Embedded Audio:	SMPTE 272M-A
Freq Lock Range:	±75ppm from nominal
Lock up time on a hot switch:	None or 7 frames (based on lock mode)

Analog Broadcast Video Output:

Standard:	NTSC, SMPTE 170M PAL, ITU624-4
Number of Inputs:	2 per input video
Connector:	BNC per IEC 60169-8 Amendment 2
Signal Level:	1V nominal
Output Impedance:	75Ω
DC Offset:	0V ±50mV
Return Loss:	> 45dB to 10MHz
Freq Response:	< ±0.1dB to 4MHz (response will depend on selected filtering)
Differential Phase:	< 0.5° (< 0.3° typical)
Differential Gain:	< 0.5% (< 0.3% typical)
SNR:	> 75dB (both channels black video, 100kHz to 5MHz)
Output level control range:	±10%
Black level control range:	±7.5 IRE
Chroma level control range:	±10%
Hue control range:	±15° (NTSC only)
Minimum Delay:	3µs
Maximum Delay:	1 frame + 3µs (+S option only)

Reference Video Input:

Standard:	NTSC, SMPTE 170M PAL, ITU624-4
Number of Inputs:	1
Connector:	BNC per IEC 60169-8 Amendment 2
Signal Level:	1V nominal (0.5V to 1.5V)
Freq Lock Range:	±75ppm from nominal
Input Impedance:	75Ω or High impedance (jumper selectable)
Return Loss:	> 25dB to 10MHz
Max Subcarrier Jitter:	< 3°
Free-Running Frequency Control Range:	> ±10ppm (> ±270Hz)

Analog Monitoring Video Output:

Standard:	NTSC, SMPTE 170M PAL, ITU624-4
Number of Outputs:	1
Connector:	BNC per IEC 60169-8 Amendment 2
Signal Level:	1V nominal
Output Impedance:	75Ω
Return Loss:	> 35dB to 10MHz

Analog Audio Outputs (-A4 and -A8 only):

Number of Outputs:	4 (2 per video channel) 7736CE2-A4 8 (4 per video channel) 7736CE2-A8
Type:	Balanced analog audio
Connector:	Two 6-pin removable terminal strips 7736CE2-A4 Single 16 pin removable terminal strip, 7736CE2-A8
Output Impedance:	66Ω balanced
Sampling Frequency:	48kHz
Signal Level:	0dBFS ⇨ 12 to 25dBu (user-settable)
Freq Response:	< ±0.05dB (20Hz to 20kHz)
Dynamic range:	24 bits when AES inputs selected, 20 bits when embedded audio selected
THD+N:	< 0.001% (> 100dB) @ 1kHz, -1dBFS
Crosstalk:	< -105dB (20Hz to 20kHz)
DC Offset:	< ±30mV
SNR:	> 110dB "A" Weighting
Inter-Channel Phase Error:	< ±1° (20Hz to 20kHz)

Unbalanced AES Audio Inputs (-A4 and -A8 only):

Number of Inputs:	2 for 7736CE2-A4 4 for 7736CE2-A8
Input Standard:	SMPTE 276M, single ended synchronous or asynchronous PCM AES
Connectors:	BNC per IEC 60169-8 Amendment 2 (7736CE2A-4) 15dB (7736CE2A-A8)
Resolution:	Up to 24bits
Input Sampling Rate:	32kHz to 48kHz
Minimum I/O Delay:	3.5ms

Balanced AES Audio Inputs (-A4 only):

Number of Inputs:	2
Input Standard:	AES3-1992, balanced synchronous or asynchronous PCM AES
Connectors:	One 6-pin removable terminal strip
Impedance:	110Ω
Resolution:	Up to 24 bits
Sampling Rate:	32kHz to 48kHz
Input Level:	2V to 7V p-p
Minimum I/O Delay:	3.5ms

Electical:

Voltage:	+12V DC
Power:	10.2W (7736CE2) 17.75W (7736CE2-A4) 18 W (7736CE2-A8)
EMI/RFI:	Complies with FCC Part 15, class A and EU EMC directive.

Physical:

7700 frame mounting:	2
7701 frame mounting:	1

Ordering Information

7736CE2	Dual Composite Encoder
7736CE2-A4	Dual Composite Encoder with 4 analog ouputs
7736CE2-A8	Dual Composite Encoder with 8 analog ouputs

Ordering Options Rear Plate must be specified at time of order
Eg: Model +3RU

+S Optional Frame Synchronizer

Rear Plate Suffix

+3RU	3RU Rear Plate for use with 7700FR-C Multiframe
+1RU	1RU Rear Plate for use with 7701FR Multiframe
+SA	Standalone Enclosure Rear Plate

Enclosures

7700FR-C	3RU Multiframe which holds up to 15 single slot modules
7701FR	1RU Multiframe which holds up to 3 single or dual slot modules
S7701FR	Standalone enclosure

7736CDM & 7736CDM-A4

Composite Analog Video A to D Converter with Optional Frame Synchronizer

The 7736CDM line of composite analog video to serial digital converters are broadcast quality decoders with an extensive list of additional features. High quality audio analog to digital conversion can be packaged with the decoder to create a video/audio frame synchronizer with audio embedder.

Faroudja 2D adaptive comb filtering technology has been chosen to not introduce moving artifacts from the decoding process. This makes it ideal for use in applications where the signal is destined to enter MPEG compressors. "The low level of moving artifacts reduces the bit-rate required to digitally encode the signal for a given picture quality level by up to 20%." [1]

Traditional adaptive and non-adaptive 2D comb filters can introduce artifacts in areas of high detail. However, "by using adaptive processing incorporating Faroudja's patented H-logic and V-logic interpolation algorithms to control both the comb filter itself and the narrow and wide band chroma filters, these artifacts are substantially reduced not only on horizontal and vertical edges, but on diagonal edges too. In this way, the chroma filters reduce chroma noise without blurring the signal at sharp transitions in any direction."[2]

In addition, Evertz fault monitoring processing will analyze and report video and audio problems via an On-ScreenDisplay, or remotely via VistaLINK® SNMP.

1, 2 Faroudja Laboratories Inc., FLI2000S Data Sheet

Features & Benefits

The Features of the decoding process

- 10-bit, 8fsc sampling of input video
- Internal processing to maintain 10-bit digital video quality
- Patented Faroudja adaptive 2D comb filtering technology
- Mode for support of non-time base corrected signals
- User-configurable luma and chroma detail enhancement
- User-selectable noise reduction
- Chroma AGC available, if desired
- User-adjustable input video processing functions: black level, gain, hue, and saturation (when chroma AGC is enabled)

The Features of all 7736CDMs are

- Flexible input options for hybrid analog and digital plants/studios
- Two input BNCs that can be configured either as one composite analog loop input (NTSC or PAL-B) or a dual input with one channel of SDI and one channel of composite analog video (selectable)
- Four SDI 525 or 625, 270Mb/s component digital video output without OSD text or audio bargraphs
- One composite analog video output with OSD text and bargraph graphics
- EDH encoding on SDI output
- One composite analog reference input (NTSC or PAL-B) on BNC
- 75Ω or high-Z, jumper configurable input impedance
- One frame video synchronizer (with +S option)
- Infinitely variable output phase (27MHz clock increments)
- Freeze modes: black, freeze
- Adjustable free running frequency via OSD
- VU/PPM bargraph level Indicators
- Decodes vertical interval time code (VITC) and "burns" the time code into the picture
- Decodes PESA format Source ID (8 characters) or Evertz format VITC Source ID (5 or 9 characters) and burns the ID into the picture
- A comprehensive on-screen display is available to configure the various features of the module
- Flexible configuration of the text and audio bar graph information displays
- An extensive list of error conditions can be monitored and fault conditions can be configured from these conditions
- On-screen messages can be triggered by the configured fault conditions
- VistaLINK® - capable for remote monitoring and control via SNMP (using VistaLINK® PRO, 9000NCP or 9000NCP2 Network Control Panel) when installed in 7700FR-C frame with 7700FC VistaLINK® Frame Controller

The Features of "-A4" option are

- 4 balanced analog audio inputs on 2 removable barrier strips
- High impedance inputs (user supplies termination resistors for other impedances)
- Analog audio input levels are adjustable
- Jumpers set coarse input levels, fine input levels are set by software control
- Audio delay equivalent video delay (with +S option)
- Additional audio delay of up to 5 seconds
- Audio advance of up to 1 frame less 3 microseconds
- One group (4 channels of audio) is multiplexed on the outgoing digital video
- 2 unbalanced AES audio outputs delayed equivalently to the video delay
- 75Ω coaxial (unbalanced) DARS reference input on BNC
- Loss of video modes: pass audio, mute audio

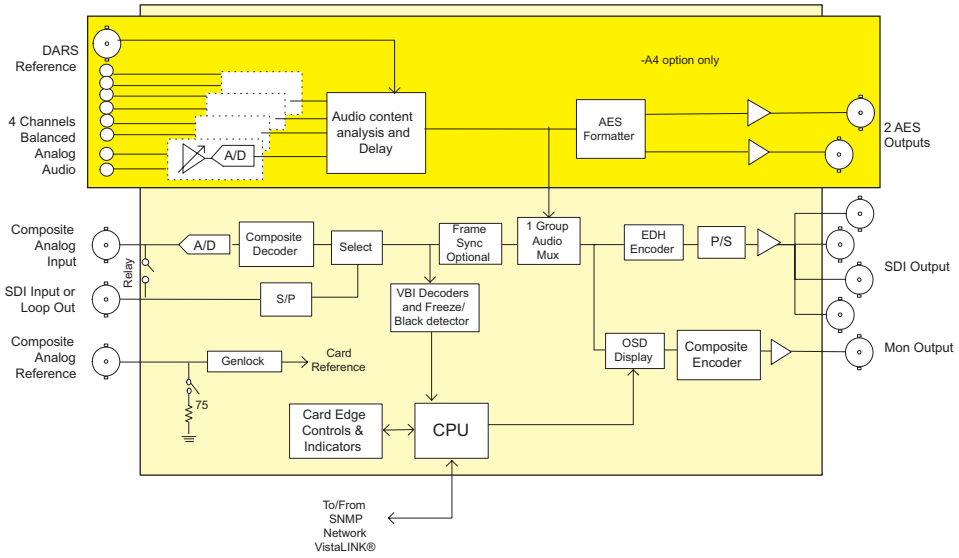

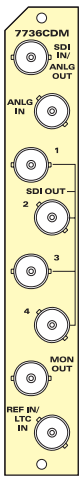

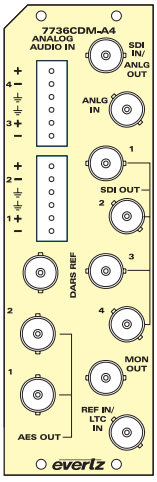

Specifications

Analog Video Input:
Standard: NTSC, SMPTE 170M
PAL, ITU624-4
Number of Inputs: 1
Connector: BNC per IEC 60169-8 Amendment 2
Signal Level: 1V nominal
Freq Lock Range: ±75ppm from nominal
Input level control range:
±5dB
Black level control range:
±5 IRE
Chroma level control range:
±20% (only available if chroma AGC enabled)
Hue control range: ±20° (NTSC only)
Input Impedance: 75Ω or High impedance (depending on input mode)
Return Loss: > 35dB to 10MHz
Lock up time on a hot switch:
Between 15 and 45 frames (may be longer with noisy signals)

Serial Video Inputs:
Standard: SMPTE 259M-C - 525 or 625 line component
Number of Inputs: 1
Number of re-clocked outputs:
0
Connector: BNC per IEC 60169-8 Amendment 2
Return Loss: > 15dB to 300MHz
Embedded Audio: SMPTE 272M-A
Freq Lock Range: ±75ppm from nominal

Reference Video Input:
Standard: NTSC, SMPTE 170M
PAL, ITU624-4
Number of Inputs: 1
Connector: BNC per IEC 60169-8 Amendment 2
Signal Level: 1V nominal
Freq Lock Range: ±75ppm from nominal
Input Impedance: 75Ω or High impedance (jumper selectable)
Return Loss: > 25dB to 10MHz

Analog Monitoring Video Output:
Standard: NTSC, SMPTE 170M
PAL, ITU624-4
Number of Outputs: 1
Connector: BNC per IEC 60169-8 Amendment 2
Signal Level: 1V nominal
Output Impedance: 75Ω
Return Loss: > 35dB to 10MHz

Serial Video Output:
Standard: SMPTE 259M-C - 525 or 625 line component
Number of Outputs: 4
Connector: BNC per IEC 60169-8 Amendment 2
Signal Level: 800mV nominal
DC Offset: 0V ±0.5V
Rise and Fall Time: 900ps nominal
Overshoot: < 10% of amplitude
Return Loss: > 15dB to 270MHz
Embedded Audio: SMPTE 272M-A

Decoder Performance (SDI output only):
Frequency Response: < ±0.1dB (100kHz to 4.2MHz)
Differential Gain: < ±0.5% typical
Differential Phase: < ±0.2° typical
Noise Floor: < -56dBms (black video, 15kHz to5MHz)
< -60dBms (VBI lines, black video, 15kHz to 5MHz)
C/L Gain: < ±0.5%
C/L Delay: < ±9ns
Minimum Delay: 3.25 lines
Maximum Delay: 1 frame plus 3.25 lines (+S option only)

Analog Audio Input (-A4 only):
Number of Inputs: 4
Type: Balanced analog audio
Connector: Removable terminal strip
Input Impedance: 20kΩ minimum (differential)
Sampling Frequency: 48kHz
Signal Level: 0dB FS => 18 or 24dBu (jumper selectable)
Level Control Range: ±10dB
Frequency Response: ±0.1dB (20Hz to 20kHz) (broadcast quality)
SNR: 100dB with input at -0.5dBFS
THD+N: < 0.001% (> 100dB) @ 20Hz to 20kHz, -0.5dB FS (input video locked to genlock video)
CMRR: > 100dB @ 1kHz

AES Audio Outputs (-A4 version only):
Number of Outputs: 2
Output Standard: SMPTE 276M, single ended synchronous AES
Connectors: BNC per IEC 60169-8 Amendment 2
Resolution: 24 bits
Sampling Rate: synchronous 48kHz
Minimum I/O Delay: 2.1ms
Maximum I/O Delay: 5 seconds

Electrical:
Voltage: +12V DC
Power: 10W CDM + 9W (-A4 option)
= 19W total
EMI/RFI: Complies with FCC Part 15, Class A
EU EMC Directive

Physical:
7700 frame mounting: 2
7701 frame mounting: 1

Stand Alone Enclosure:
Dimensions: 14" L x 4.5" W x 1.9" H
(355mm L x 114mm W x 48mm H)
Weight: approx. 1.5lbs (0.7kg)

Ordering Information

7736CDM	Composite analog video to SDI decoder with auxiliary SDI input with optional frame synchronizer
7736CDM-A4	Composite analog video to SDI decoder with auxiliary SDI input, analog audio to embedded and AES with optional frame synchronizer

Ordering Options Rear Plate must be specified at time of order
Eg: Model +3RU

+S Optional frame synchronizer

Rear Plate Suffix
+3RU 3RU Rear Plate for use with 7700FR-C Multiframe
+1RU 1RU Rear Plate for use with 7701FR Multiframe
+SA Standalone Enclosure Rear Plate

Accessories
7700FC VistaLINK® Frame Controller
9000NCP 1RU VistaLINK® General Purpose Network Control Panel
9000NCP2 2RU VistaLINK® General Purpose Network Control Panel

Enclosures
7700FR-C 3RU Multiframe which holds up to 15 single slot modules
7701FR 1RU Multiframe which holds up to 3 single or dual slot modules
S7701FR Standalone enclosure

The 7736CD2 line of composite analog video to serial digital converters are dual broadcast quality video decoders. The 7736CD2-A4 and the 7736CD2-A8 versions offer four (two per decoded channel) or eight (four per decoded channel) high quality audio analog to digital converters. Faroudja 2D adaptive comb filtering technology has been chosen so as not to introduce moving artifacts from the decoding process. This makes it ideal for use in applications where the signal is destined to enter MPEG compressors. "The low level of moving artifacts reduces the bit-rate required to digitally encode the signal for a given picture quality level by up to 20%."[1]

Traditional adaptive and non-adaptive 2D comb filters can introduce artifacts in areas of high detail. However, "by using adaptive processing incorporating Faroudja's patented H-logic and V-logic interpolation algorithms to control both the comb filter itself and the narrow and wide band chroma filters, these artifacts are substantially reduced not only on horizontal and vertical edges, but on diagonal edges too. In this way, the chroma filters reduce chroma noise without blurring the signal at sharp transitions in any direction". "2"

1, 2 Faroudja Labratories Inc, FLI2000S Data Sheet

In addition, control of the card is via an On-Screen-Display, or remotely via VistaLINK® SNMP.

Features & Benefits

- One input BNC per channel. 75W or Hi-Z, (jumper configurable)
- Two SDI 525 or 625, 270 Mb/s digital video output per channel
- EDH encoding on SDI outputs
- One composite analog video output with OSD text for card control
- One composite analog reference input (NTSC/PAL-B). 75Ω or Hi-Z, input impedance. One time base for both channels
- Video frame synchronizer (with +S option)
- Infinitely variable output phase (27MHz clock increments)
- Freeze modes: black, freeze
- Adjustable free running frequency via OSD. Both channels must be free-running to be able to adjust frequency
- A comprehensive on screen display for module config

The Features of the Decoding Process

- 12 bit, 8fsc sampling of input video.
- Internal processing to maintain 10 bit digital video quality
- Patented Faroudja adaptive 2D comb filtering technology
- Mode for support of non-time base corrected signals
- User configurable luma and chroma detail enhancement
- User selectable noise reduction
- Chroma AGC available, if desired
- User adjustable input video processing functions: black level, gain, hue, and saturation (when chroma AGC is enabled)

The Features of "-A4" and "-A8" Options

- 4 balanced analog audio inputs (two stereo pair) on 2 removable barrier strips (7736CD2-A4)
- 8 balanced analog audio inputs (four stereo pair) on terminal strips (7736CD2-A8)
- High impedance inputs (user terminated for other impedances)
- Analog audio input levels are adjustable. Jumpers set coarse input levels, fine input levels are set by software control
- Audio delay "tracks" video delay (with +S option)
- Additional audio delay of up to 5 seconds
- Audio advance of up to 1 frame less 2.5 microseconds
- 2 channels (1/2 group) of audio is multiplexed onto each of the outgoing digital video (7736CD2-A4)
- 4 channels (one full group) of audio is multiplexed onto each of the outgoing digital video (7736CD2-A8)
- 2 unbalanced AES audio outputs using BNC's (7736CD2-A4)
- 4 unbalanced AES audio outputs using 15dB connector (7736CD2-A8)
- 75Ω coaxial (unbalanced) DARS reference input on BNC

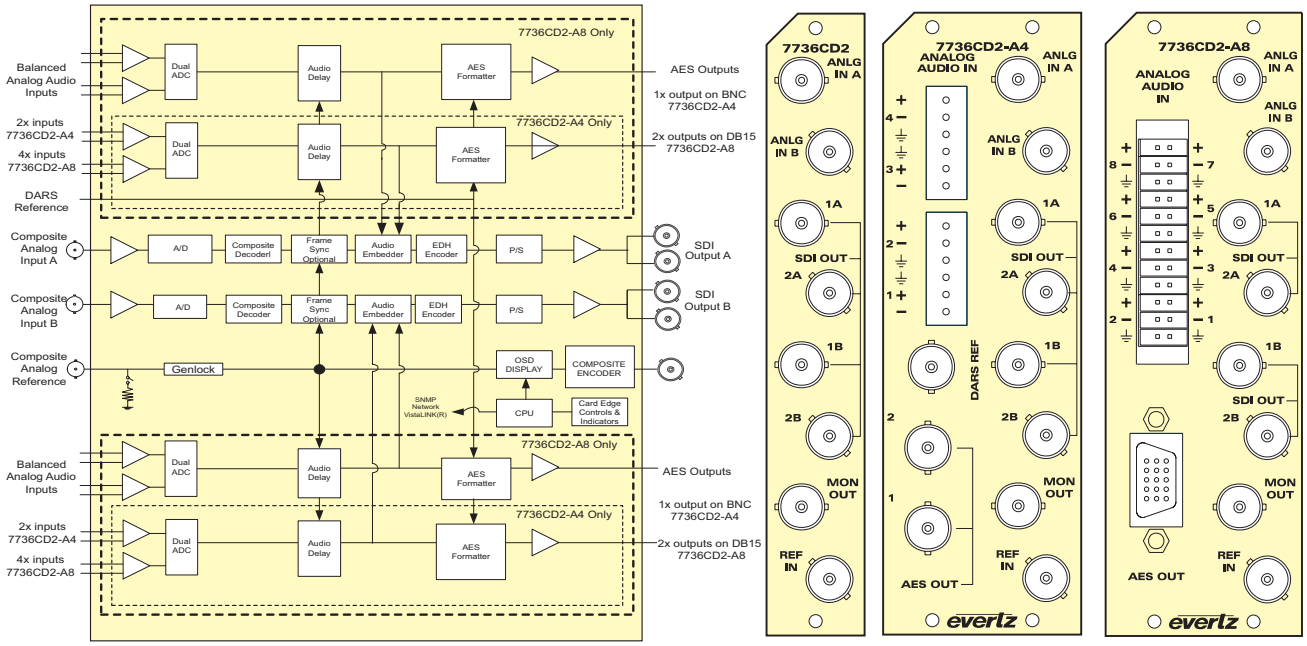

Specifications

Analog Video Input:
Standard: NTSC, SMPTE 170M PAL, ITU624-4
Number of Inputs: 1
Connector: BNC per IEC 60169-8 Amendment 2
Signal Level: 1V nominal
Frequency Lock Range: ±75ppm from nominal
Input level control range: ±4dB
Black level control range: ±5 IRE
Chroma level control range: ±20% (only available if chroma AGC enabled)
Hue control range: ±20° (NTSC only)
Input Impedance: 75Ω or High impedance (jumper selectable)
Return Loss: > 35dB to 10MHz
Lock up time on a hot switch: Between 15 and 45 frames (may be longer with noisy signals)

Reference Video Input:
Standard: NTSC, SMPTE 170M PAL, ITU624-4
Number of Inputs: 1
Connector: BNC per IEC 60169-8 Amendment 2
Signal Level: 1V nominal
Frequency Lock Range: ±75ppm from nominal
Input Impedance: 75Ω or High impedance (jumper selectable)
Return Loss: > 25dB to 10MHz

Analog Monitoring Video Output:
Standard: NTSC, SMPTE 170M PAL, ITU624-4
Number of Outputs: 1
Connector: BNC per IEC 60169-8 Amendment 2
Signal Level: 1V nominal
Output Impedance: 75Ω
Return Loss: > 35dB to 10MHz

Serial Video Output:
Standard: SMPTE 259M-C - 525 or 625 line component
Number of Outputs: 4 (2 per channel)
Connector: BNC per IEC 60169-8 Amendment 2
Signal Level: 800mV nominal
DC Offset: 0V ±0.5V
Rise and Fall Time: 900ps nominal
Overshoot: < 10% of amplitude
Return Loss: > 15dB to 270MHz
Jitter: < 0.09 UI (all outputs)
Embedded Audio: SMPTE 272M-A

Decoder Performance (SDI outputs only):
Frequency Response: < ±0.1dB (100kHz to 4.2MHz)
Differential Gain: < ±0.5% typical
Differential Phase: < ±0.2° typical
Noise Floor: < -57dB rms (black video, 15kHz to 5MHz)
< -60dB rms (VBI lines, black video, 15kHz to 5MHz)
C/L Gain: < ±0.5%
C/L Delay: < ±9ns
Minimum Delay: 3.25 lines
Maximum Delay: 1 frame plus 3.25 lines
Inter-channel crosstalk: Within noise floor measurement

Analog Audio Input (-A4 and -A8 only):
Number of Inputs: 4 (2 per video channel) 7736CD2-A4
8 (4 per video channel) 7736CD2-A8
Type: Balanced analog audio
Connector: Removable terminal strip
Input Impedance: 20kΩ minimum (differential)
Sampling Frequency: 48kHz
Signal Level: 0dB FS ⇨ 18 or 24dBu (jumper selectable)
Level Control Range: ±10dB
Frequency Response: ±0.1dB (20Hz to 20kHz) (broadcast quality)
SNR: 105dB
THD+N: < 0.001% (> 100dB) @ 1kHz, -0.5dB FS (rev 2) < 0.001% (> 100dB) @ 20Hz to 20kHz, -0.5dB FS (input video locked to genlock video)
CMRR: > 100dB @ 1kHz

AES Audio Outputs:
Number of Outputs: 2 (1 per channel) 7736CD2-A4
4 (2 per channel) 7736CD2-A8
Output Standard: SMPTE 276M, single ended synchronous AES
Connectors: BNC per IEC 60169-8 Amendment 2 for 7736CD2-A4
15dB for 7736CD2-A8
Resolution: 24 bits
Sampling Rate: synchronous 48kHz
Minimum I/O Delay: 2.1ms
Maximum I/O Delay: 2.5 seconds

Electrical:
Voltage: +12V DC
Power: 12W (7736CD2)
21W (7736CD2-A4)
19 W (7736CD2-A8)
EMI/RFI: Complies with FCC Part 15, Class A
EU EMC directive

Physical:
7700 frame mounting: 2
7701 frame mounting: 1

Ordering Information

7736CD2	Dual Composite Decoder
7736CD2-A4	Dual Composite Decoder with 4 analog inputs
7736CD2-A8	Dual Composite Decoder with 8 analog inputs

Enclosures

7700FR-C	3RU Multiframe which holds up to 15 single slot modules
7701FR	1RU Multiframe which holds up to 3 single or dual slot modules
S7701FR	Standalone enclosure

Ordering Options Rear Plate must be specified at time of order
Eg: Model +3RU

+S Optional Frame Synchronizer

Rear Plate Suffix

+3RU	3RU Rear Plate for use with 7700FR-C Multiframe
+1RU	1RU Rear Plate for use with 7701FR Multiframe
+SA	Standalone Enclosure Rear Plate

7746FSE, 7746FS-EAES4

SD-SDI Frame Synchronizers

The 7746FSE series SD Frame Synchronizers are designed to re-time a SMPTE259M (625i/50, 525i/59.94) input to a local sync signal. When necessary, frames are repeated or dropped to maintain synchronization. During the synchronizing process, the video delay varies from 3 lines through to 1 frame plus 3 lines. Additional delay can be added to the synchronizing process in 1 frame increments.

The 7746FSE is currently available in two versions to suit various application requirements.

	Synchronizes			AES Audio	
Model	Video	Embedded Audio	AES Audio	Inputs	Outputs
7746FSE	Yes	Demux & mux 2 Groups	No	-	-
7746FS-EAES4	Yes	Demux & mux 2 Groups	4	4	4

On the 7746FSE version the video and embedded audio is synchronized. On the 7746FS-EAES4 version, the user can choose to have either 2 groups from the upstream embedded audio or audio from the 4 AES inputs embedded on the output video and output as AES. Both versions can also pass all VANC data. When the input video is lost, it will pass the input AES or mute if embedded audio is selected for synchronizing. The frame synchronizers also have the ability to set the audio delay independently from the video delay.

The frame synchronizers have the ability to adjust video parameters such as brightness, contrast, saturation and hue. The 7746FSE products can adjust audio parameters such as gain, mixing stereo pairs into monaural and reassignment of audio channels.

The card functions can be controlled from the card edge or through the VistaLINK® interface.

Features & Benefits

- Synchronizes 525i/59.94 or 625i/50
- Minimum video input to output delay - 3 lines
- Maximum video input to output delay - 1 frame plus 3 lines
- 12 additional frames of delay can be added for interlaced video formats
- Program Video output bypass relay protected on power loss
- Programmable output phase with respect to reference input
- Freeze on last good frame, or field, go to black on loss of video or pass input
- Synchronizes 2 groups of embedded audio and re-embeds 2 groups
- Audio Sample Rate Converters can be disabled for Dolby E support
- Independently adjustable audio levels on all channels
- Ability to combine stereo pairs to monaural
- Reassignment of audio channels within the embedded groups
- Front panel LEDs indicate: module fault, video and audio present
- Serial remote data logging
- Adjustable video black level (brightness), Y level (contrast) and chroma level (saturation), color (hue)
- Maximum audio input to output delay - equivalent to additional frames of video delay
- Separate control of video and audio delay
- Audio Sample Rate Converters can be disabled
- Independently adjustable audio levels on all channels
- Ability to combine stereo pairs to monaural
- Reassignment of audio channels
- VistaLINK® - capable offering remote control and configuration capabilities via SNMP (using VistaLINK® PRO, 9000NCP or 9000NCP2 Network Control Panel) is available when modules are used with the 3RU 7700FR-C frame and a 7700FC VistaLINK® Frame Controller module in slot 1 of the frame

Additional Features for -EAES4 versions

- Synchronizes four external AES signals
- Synchronized audio is output as 4 AES signals
- AES outputs bypass relay protected on power loss

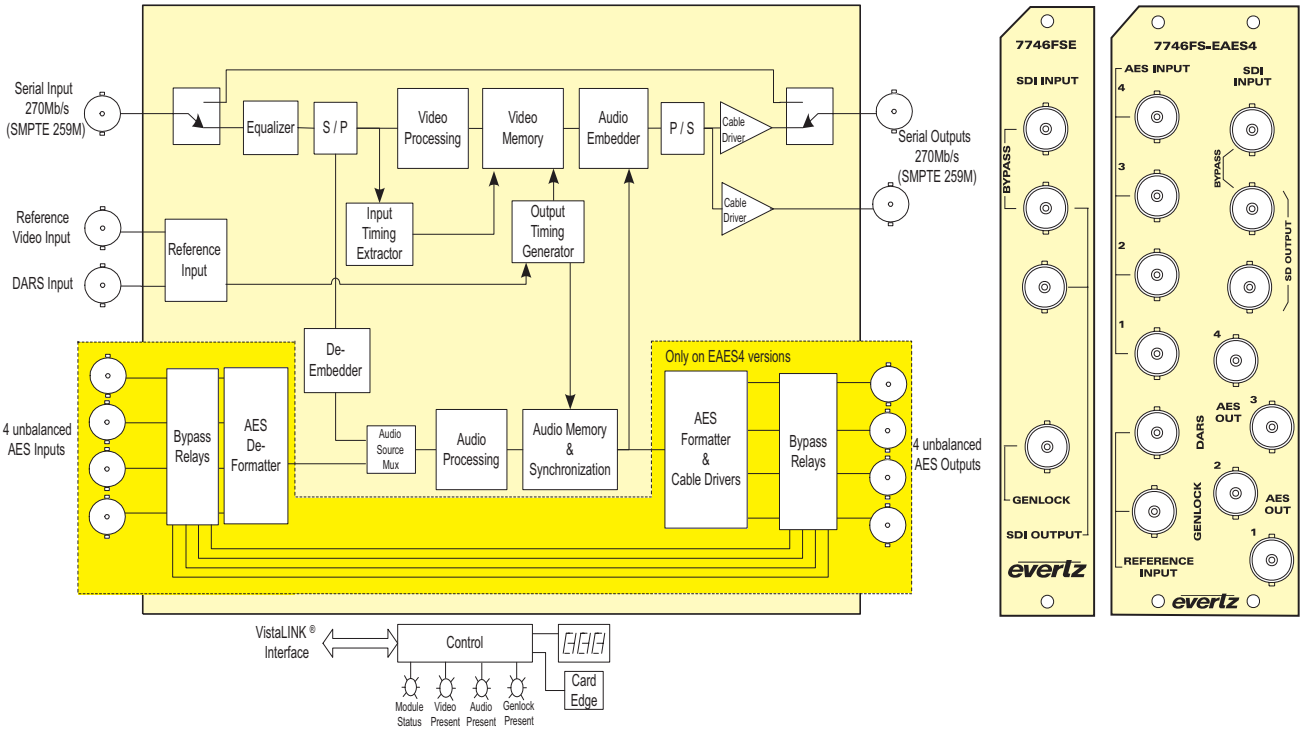

Specifications

Serial Video Input:
Standard: SMPTE 259M-C 525i/59.94 or 625i/50
Connector: BNC per IEC 60169-8 Amendment 2
Input Equalization: Automatic to 300m @ 270Mb/s with Belden 1694A or equivalent cable
Return Loss: > 15dB up to 270MHz

Serial Video Outputs:
Number of Outputs: 2 (1 output is bypass relay protected)
Connectors: BNC per IEC 60169-8 Amendment 2
Signal Level: 800mV nominal
DC Offset: 0V ±0.5V
Rise and Fall Time: 900ps nominal
Overshoot: < 10% of amplitude
Wide Band Jitter: < 0.10 UI

Genlock Input:
Type: NTSC or PAL Color Black 1V p-p, or Composite bi-level sync (525i/59.94 or 625i/50) 300mV
Connector: BNC per IEC 60169-8 Amendment 2
Termination: 75Ω (jumper selectable)

AES Audio Input and Output (7746FS-EAES4):
Number of Inputs: 4
Number of Outputs: 4
Standard: SMPTE 276M, single ended synchronous or asynchronous AES
Connectors: BNC per IEC 60169-8 Amendment 2
Resolution: 24 bits
Sampling Rate: 48kHz
Impedance: 75Ω unbalanced
Signal Level: 1V p-p nominal

Processing Functions:
Video:
Black Level: ± 7%
Luminance Gain: ± 6dB
Chrominance Gain: ± 6dB
Hue: ± 20°
Audio:
Gain: ± 24dB
Remapping: Any input or mono mix of any L/R pair to any output

Input To Output Processing Delay:
Video Processing Delay:
Minimum Delay Mode:
3 lines to 1 frame plus 3 lines
Additional Delay Mode:
Up to 12 frames of additional delay (1 frame increments)

Data Logging Serial Port:
Standard: RS 232
Connector: Software upgrade cable femaledB-9
Baud Rate: 57600
Format: 8 bits, no parity, and 2 stop bits

Electrical:
Voltage: +12V DC
Power:
7746FSE: 12W
7746FS-EAES4: 15.5W
EMI/RFI: Complies with FCC Part 15, Class A EU EMC Directive

Physical:
7700 frame mounting:
Number of slots: 1 for 7746FSE
2 for 7746FS-EAES4
7701 frame mounting:
Number of slots: 1 for 7746FSE
1 for 7746FS-EAES4

Ordering Information

7746FSE	SD-SDI Frame Synchronizer
7746FS-EAES4	SD-SDI Frame Synchronizer with discrete 4 AES Audio Processing Support

Ordering Options Rear Plate must be specified at time of order
Eg: Model +3RU

Rear Plate Suffix

+3RU	3RU Rear Plate for use with 7700FR-C Multiframe
+1RU	1RU Rear Plate for use with 7701FR Multiframe
+SA	Standalone Enclosure Rear Plate

Accessories

7700FC	VistaLINK® Frame Controller
9000NCP	1RU VistaLINK® General Purpose Network Control Panel
9000NCP2	2RU VistaLINK® General Purpose Network Control Panel

Enclosures

7700FR-C	3RU Multiframe which holds up to 15 single slot modules
7701FR	1RU Multiframe which holds up to 3 single or dual slot modules
S7701FR	Standalone enclosure

7746FSE-HD, 7746FS-EAES4-HD

HD/SD Frame Synchronizers

The 7746FSE-HD series HD/SD Frame Synchronizers are designed to re-time a SMPTE 292M (1080i/60, 1080i/59.94, 1080i/50, 1080p/24sF, 1080p/23.98sF, 720p/60, 720p/59.94, or 480p/59.94) or SMPTE259M (625i/50, 525i/59.94) input to a local reference tri-level or composite sync signal. When necessary, frames are repeated or dropped to maintain synchronization. During the synchronizing process the video delay varies from 3 lines through to 1 frame plus 3 lines. Additional delay can be added to the synchronizing process in 1 frame increments.

The 7746FSE-HD is available in two versions to suit various application requirements.

	Synchronizes			AES Audio	
Model	Video	Embedded Audio	AES Audio	Inputs	Outputs
7746FSE-HD	Yes	Demux & mux 2 Groups	No	-	-
7746FS-EAES4-HD	Yes	Demux & mux 2 Groups	4	4	4

On the 7746FSE-HD version the video and any embedded audio present is synchronized. On the 7746FS-EAES4-HD version, the user can choose to have either 2 groups from the upstream embedded audio or audio from the 4 AES inputs embedded on the output video and output as AES.

Both versions can also pass all VANC data. When the input video is lost, it will pass the input AES or mute if embedded audio is selected for synchronizing. The frame synchronizers also have the ability to set the audio delay independently from the video delay.

The frame synchronizers have the ability to adjust video parameters such as brightness, contrast and saturation. Hue control is available for SD standards (525i/59.94 and 625i/50). They can also adjust audio parameters such as gain, mixing stereo pairs into monaural and reassignment of audio channels.

The card functions can be controlled from the card edge or through the VistaLINK® interface.

Features & Benefits

- Synchronizes 1080i/60, 1080i/59.94, 1080i/50, 1080p/24sF, 1080p/23.98sF, 720p/60, 720p/59.94, 480p/59.94, 525i/59.94 or 625i/50
- Minimum video input to output delay - 3 lines
- Maximum video input to output delay - 1 frame plus 3 lines
- 12 additional frames of delay can be added for interlaced video formats, 28 frames for progressive formats.
- Program Video output bypass relay protected on power loss
- Programmable output phase with respect to reference input
- Freeze on last good frame, or field, go to black on loss of video or pass input
- Synchronizes 2 groups of embedded audio and re-embeds 2 groups
- Front panel LEDs indicate: module fault, video and audio present
- Serial remote data logging
- Adjustable video black level (brightness), Y level (contrast) and chroma level (saturation)
- Adjustable hue control for SD video standards
- Maximum audio input to output delay - equivalent to additional frames of video delay
- Synchronizes VANC data starting after switch line
- Synchronizes RP188 time codes
- Separate control of video and audio delay
- Audio Sample Rate Converters can be disabled for Dolby support
- Independently adjustable audio levels on all channels
- Ability to combine stereo pairs to monaural
- Reassignment of audio channels
- VistaLINK® - capable offering remote control and configuration capabilities via SNMP (using VistaLINK® PRO, 9000NCP or 9000NCP2 Network Control Panel) is available when modules are used with the 3RU 7700FR-C frame and a 7700FC VistaLINK® Frame Controller module in slot 1 of the frame

Additional Features for -EAES4 versions

- Synchronizes four external AES signals
- Synchronized audio is output as 4 AES signals
- AES outputs bypass relay protected on power loss

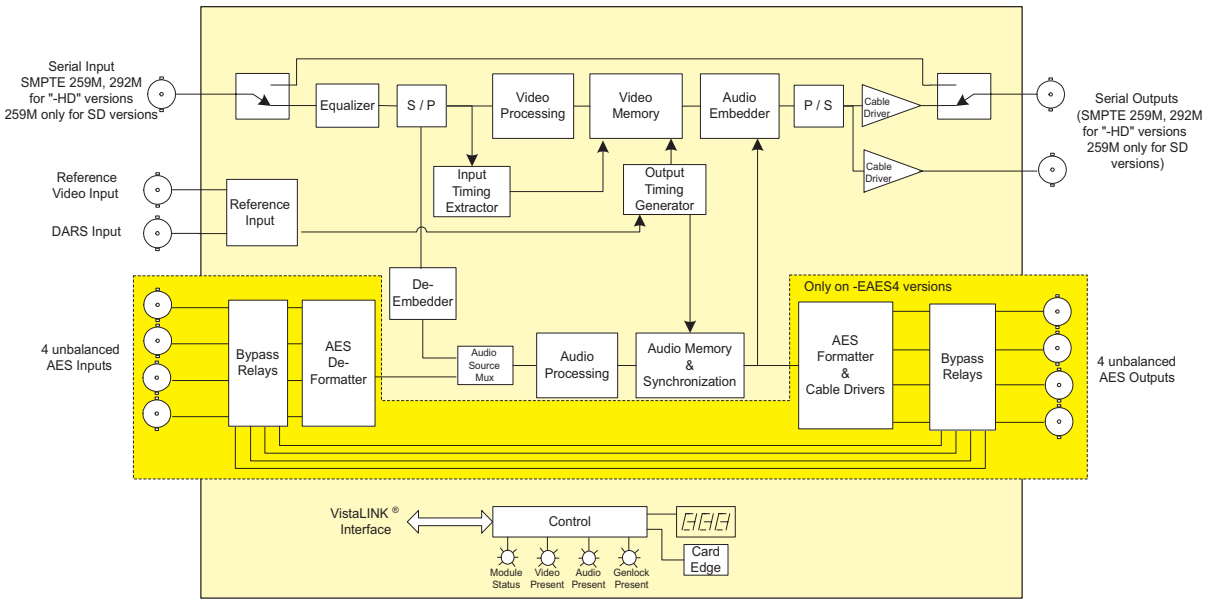

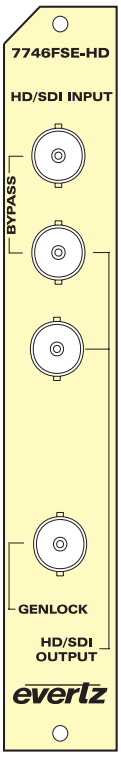

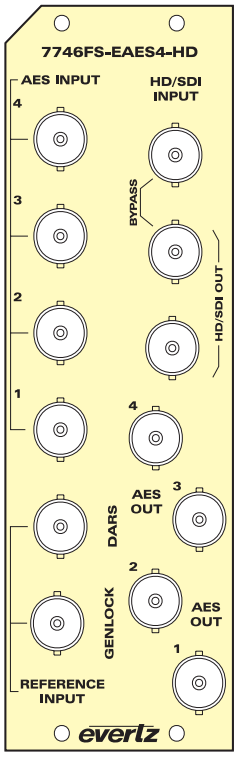

Specifications

Serial Video Input:

Standard:	DIP switch selectable 1.485Gb/s SMPTE 292M - SMPTE 274M, SMPTE 296M, SMPTE 349M 270 Mb/sec SMPTE 259M-C 525i/59.94 or 625i/50
Connector:	BNC per IEC 60169-8 Amendment 2
Input Equalization:	
SD:	Automatic to 300m @ 270Mb/s with Belden 1694A or equivalent cable
HD:	Automatic to 115m @ 1.5Gb/s with Belden 1694A or equivalent cable
Return Loss:	
SD:	> 15dB up to 270MHz
HD:	> 13dB up to 1.5GHz

Serial Video Outputs:

Number of Outputs:	2 (1 output is bypass relay protected)
Connectors:	BNC per IEC 60169-8 Amendment 2
Signal Level:	800mV nominal
DC Offset:	0V ±0.5V
Rise and Fall Time:	200ps nominal (HD) or 900ps nominal (SD)
Overshoot:	< 10% of amplitude
Wide Band Jitter:	< 0.16 UI (HD) or < 0.10 UI (SD)

Genlock Input:

Type:	HD Tri-level Sync NTSC or PAL Color Black 1V p-p, or Composite bi-level sync (525i/59.94 or 625i/50) 300mV
Connector:	BNC per IEC 60169-8 Amendment 2
Termination:	75Ω (jumper selectable)

AES Audio Input and Output (7746FS-EAES4-HD):

Number of Inputs:	4
Number of Outputs:	4
Standard:	SMPTE 276M, single ended synchronous or asynchronous AES
Connectors:	BNC per IEC 60169-8 Amendment 2
Resolution:	24 bits
Sampling Rate:	48kHz
Impedance:	75Ω unbalanced
Signal Level:	1V p-p nominal

Processing Functions:

Video:	
Black Level:	±7%
Luminance Gain:	±6dB
Chrominance Gain:	±6dB
Hue:	±20° (SD)
Audio:	
Gain:	±24dB
Remapping:	Any input or mono mix of any L/R pair to any output

Input To Output Processing Delay:

Video Processing Delay:

Minimum Delay Mode:
3 lines to 1 frame plus 3 lines

Additional Delay Mode:
Up to 12 frames for interlaced formats (28 frames for progressive formats) of additional delay (1 frame increments)

Data Logging Serial Port:

Standard:	RS 232
Connector:	Software upgrade cable female dB-9
Baud Rate:	115,200
Format:	8 bits, no parity, and 2 stop bits

Electrical:

Voltage:	+12V DC
Power:	
7746FSE-HD:	13.5W
7746FS-EAES4-HD:	15.5W
EMI/RFI:	Complies with FCC Part 15, Class A EU EMC Directive

Physical:

7700 frame mounting:

Number of slots:	1 for 7746FSE-HD 2 for 7746FS-EAES4-HD

7701 frame mounting:

Number of slots:	1

Ordering Information

7746FSE-HD	HD/SD Frame Synchronizer
7746FS-EAES4-HD	HD/SD Frame Synchronizer with 4 AES audio pairs and embedded audio processing & AES Support

Ordering Options	Rear Plate must be specified at time of order Eg: Model +3RU

Rear Plate Suffix

+3RU	3RU Rear Plate for use with 7700FR-C Multiframe
+1RU	1RU Rear Plate for use with 7701FR Multiframe
+SA	Standalone Enclosure Rear Plate

Accessories

7700FC	VistaLINK® Frame Controller
9000NCP	1RU VistaLINK® General Purpose Network Control Panel
9000NCP2	2RU VistaLINK® General Purpose Network Control Panel

Enclosures

7700FR-C	3RU Multiframe which holds up to 15 single slot modules
7701FR	1RU Multiframe which holds up to 3 single or dual slot modules
S7701FR	Standalone enclosure

7746FS-EAES8-HD

HD/SD-SDI Frame Synchronizer with Embedded Audio Processing & 8 AES Support

The 7746FS-EAES8-HD HD/SD-SDI Frame Synchronizer is designed to re-time a SMPTE 292M (1080i/60, 1080i/59.94, 1080i/50, 1080p/24sF, 1080p/23.98sF, 720p/60, 720p/59.94, 720p/50, 1035i/59.94, 1035i/60, or 480p/59.94) or SMPTE259M (625i/50, 525i/59.94) input to a local reference tri-level or composite sync signal. When necessary, frames are repeated or dropped to maintain synchronization. During the synchronizing process the video delay varies from 3 lines through to 1 frame plus 3 lines. Additional delay can be added to the synchronizing process in 1 frame increments.

On the 7746FS-EAES8-HD, the user can choose to have 8 stereo pairs from 4 groups in the upstream embedded audio and from the 8 AES inputs embedded on the output video and output as AES. The module can also pass all VANC data after switching line. When the input video is lost, it will pass the input AES or mute if embedded audio is selected for synchronizing. The frame synchronizers also have the ability to set the audio delay independently from the video delay.

The frame synchronizers have the ability to adjust video parameters such as brightness, contrast and saturation. Hue control is available for SD standards (525i/59.94 and 625i/50). They can also adjust audio parameters such as gain, invert, two-channel mixing, and reassignment of audio channels. The embedder and AES outputs can individually choose between two independent audio mixers.

Features & Benefits

- Synchronizes 1080i/60, 1080i/59.94, 1080i/50, 1080p/24sF, 1080p/23.98sF, 720p/60, 720p/59.94, 720p/50, 1035i/59.94, 1035i/60, 480p/59.94, 525i/59.94 or 625i/50
- Minimum video input to output delay - 3 lines
- Maximum video input to output delay - 1 frame plus 3 lines
- 12 additional frames of delay can be added for interlaced video formats, 28 frames for progressive formats
- Program Video output bypass relay protected on power loss
- Programmable output phase with respect to reference input
- Freeze on last good frame, or field, go to black on loss of video or pass input
- Synchronizes 4 groups of embedded audio and re-embeds 4 groups
- Front panel LEDs indicate: module fault, video and embedded group presence, and AES input presence
- Serial remote data logging
- Adjustable video black level (brightness), Y level (contrast) and chroma level (saturation)
- Adjustable hue control for SD video standards
- Maximum audio input to output delay - equivalent to additional frames of video delay
- Synchronizes VANC data starting after switch line
- Synchronizes RP188 time codes
- Separate control of video and audio delay
- Audio Sample Rate Converters can be disabled, or set to automatically detect non-PCM data (i.e. Dolby E) and disable on a per-input basis
- Independently adjustable audio levels and inversion on all channels
- Ability to combine any two inputs to any output (including monoaural down-mixes of all input stereo pairs)
- Provides 2:1 audio mixing capability, ideal for “ducking” audio or voiceovers
- Can be used at the inputs of an audio console to expand inputs and add mixing capacity
- Performs voice overs, mix downs and on-air breakaways
- Reassignment of audio channels
- Synchronizes eight external AES signals
- Synchronized audio is output as 8 AES signals
- AES and embedded outputs can choose from two independent mixers
- AES outputs bypass relay protected on power loss
- De-embeds and embeds Dolby-E metadata to and from video VANC space
- Metadata monitoring thru VistaLINK® and modification of dial norm “parameter”
- VistaLINK® - capable offering remote control and configuration capabilities via SNMP (using VistaLINK® PRO, 9000NCP or 9000NCP2 Network Control Panel) is available when modules are used with the 3RU 7700FR-C frame and a 7700FC VistaLINK® Frame Controller module in slot 1 of the frame

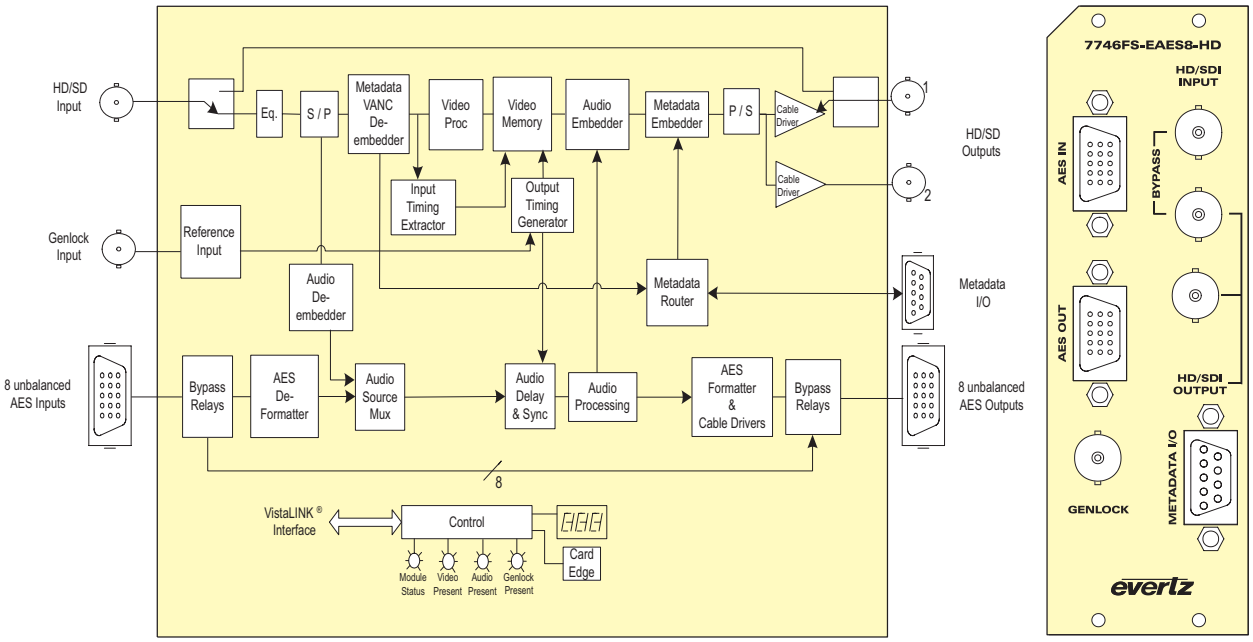

Specifications

Serial Video Input:

Standard:	Auto detectable/user selectable SMPTE 292M (1.5Gb/s), 1080i/60, 1080i/59.94, 1080i/50, 1080p/24sF, 1080p/23.94, 720p/60, 720p/59.94, 1035i/59.94, 1035i/60 or 480p/59.94 SMPTE 259M-C (270Mb/s), 525 or 625 line component
Connector:	BNC per IEC 60169-8 Amendment 2
Input Equalization:	
SD:	Automatic to 300m @ 270Mb/s with Belden 1694A or equivalent cable
HD:	Automatic to 125m @ 1.5Gb/s with Belden 1694A or equivalent cable
Return Loss:	
SD:	> 15dB up to 270Mb/s
HD:	> 15dB up to 1.5Gb/s

Serial Video Outputs:

Number of Outputs:	2 (1 output is bypass relay protected)
Connectors:	BNC per IEC 60169-8 Amendment 2
Signal Level:	800mV nominal
DC Offset:	0V ±0.5V
Rise and Fall Time:	200ps nominal (HD) or 740ps nominal (SD)
Overshoot:	< 10% of amplitude
Wide Band Jitter:	< 0.16 UI (HD) or < 0.10 UI (SD)

Genlock Input:

Type:	HD Tri-level Sync NTSC or PAL Color Black 1V p-p, or Composite bi-level sync (525i/59.94 or 625i/50) 300 mV
Connector:	BNC per IEC 60169-8 Amendment 2
Termination:	75Ω (jumper selectable)

AES Audio Input:

Standard:	SMPTE 276M, single ended AES
Number of Inputs:	8 unbalanced
Connector:	Female High Densityd B-15 (breakout cable to BNC provided)
Input Level:	0.1 to 2.5V p-p (5V p-p tolerant)
Input Impedance:	75Ω
Return Loss:	> 25dB 100kHz to 6MHz
Equalization:	Automatic to 1000m with Belden 1694A (or equivalent) @ 48kHz AES signal
Sample Rate:	32kHz to 48kHz

AES Audio Output:

Standard:	SMPTE 276M, single ended AES
Number of Outputs:	8 unbalanced
Connector:	Female High Densityd B-15 (breakout cable to BNC provided)
Sample Rate:	48kHz
Impedance:	75Ω
Resolution:	24-bit

Metadata Input/Output:

Type:	Dolby E Metadata
Standard:	RS-422
Connector:	Female dB-9
Baud Rate:	115,200 baud

Delay:

AC3 Decode Delay:	32ms nominal
Dolby E Decode Delay:	1 frame nominal
De-embedding Latency:	600µs nominal
Additional Audio Delay:	0 to maximum video delay plus 1 frame
Additional Video Delay:	0 to 12 frames (interlace) 0 to 28 frames (progressive)

Data Logging Serial Port::

Standard:	RS 232
Connector:	Software upgrade cable femaled B-9
Baud Rate:	115,200
Format:	8 bits, no parity, and 2 stop bits
Electrical:	
Voltage:	+12V DC
Power:	19W
EMI/RFI:	Complies with FCC Part 15, Class A EU EMC Directive

Physical:

7700 frame mounting:	2
7701 frame mounting:	1

Ordering Information

7746FS-EAES8-HD	HD/SD-SDI Frame Synchronizer with embedded audio processing & 8 AES Support
Ordering Options	Rear Plate must be specified at time of order Eg: Model +3RU

Rear Plate Suffix

+3RU	3RU Rear Plate for use with 7700FR-C Multiframe
+1RU	1RU Rear Plate for use with 7701FR Multiframe
+SA	Standalone Enclosure Rear Plate

Accessories

7700FC	VistaLINK® Frame Controller
9000NCP	1RU VistaLINK® General Purpose Network Control Panel
9000NCP2	2RU VistaLINK® General Purpose Network Control Panel

Enclosures

7700FR-C	3RU Multiframe which holds up to 15 single slot modules
7701FR	1RU Multiframe which holds up to 3 single or dual slot modules
S7701FR	Standalone enclosure

7746FS-EAES8-DD-HD

HD/SD-SDI Frame Synchronizer with Dolby E/AC-3 Decoder & 8 AES Support

The 7746FS-EAES8-DD-HD HD/SD Frame Synchronizer is designed to re-time a SMPTE 292M (1080i/60, 1080i/59.94, 1080i/50, 1080p/24sF, 1080p/23.98sF, 720p/60, 720p/59.94, 720p/50, 1035i/59.94, 1035i/60, or 480p/59.94) or SMPTE259M (625i/50, 525i/59.94) input to a local reference tri-level or composite sync signal. When necessary, frames are repeated or dropped to maintain synchronization. During the synchronizing process the video delay varies from 3 lines through to 1 frame plus 3 lines. Additional delay can be added to the synchronizing process in 1 frame increments.

On the 7746FS-EAES8-DD-HD version, the user can choose to have 8 stereo pairs from 4 groups in the upstream embedded audio and from the 8 AES inputs embedded on the output video and output as AES. The module can also pass all VANC data after switching line. When the input video is lost, it will pass the input AES or mute if embedded audio is selected for synchronizing. The frame synchronizers also have the ability to set the audio delay independently from the video delay.

The frame synchronizers have the ability to adjust video parameters such as brightness, contrast and saturation. Hue control is available for SD standards (525i/59.94 and 625i/50). They can also adjust audio parameters such as gain, invert, two-channel mixing, and reassignment of audio channels. The embedder and AES outputs can individually choose between two independent audio mixers.

One selected channel is processed by the on-card Dolby Decoder. If the channel contains Dolby E or Dolby Digital (AC3), it may yield up to 8 additional discrete audio channels, 2 channels of stereo downmix and the associated Dolby E metadata. Up to 16 selected channels may be optionally delayed up to 1.2 seconds and re-embedded into the output video and/or directed to AES outputs. Video output may be optionally delayed to help with lip sync. If PCM audio is embedded, the device acts as a simple 4 group audio de-embedder.

This device also handles the Dolby E Metadata. Metadata is optionally embedded in VANC and can be provided as an output for downstream devices (i.e. Dolby Encoders, Multichannel Audio Tool, etc.).

For lip sync cohesion and ease of editing, Dolby-E data is organized in blocks with lengths matching the associated video frame. The decoder will match the beginning of each output block with the start of video, as provided with the genlock input. Additional delay can be dialed up by the user, up to 1.2 seconds. The 8 AES inputs can be configured as a backup, in the event the primary is lost, or as a voice-over source.

VistaLINK® enables control and configuration capabilities via Simple Network Management Protocol (SNMP). This offers the flexibility to manage the module status monitoring and configuration from SNMP - enabled control systems such as Evertz VistaLINK® PRO locally or remotely.

Features & Benefits

- Synchronizes 1080i/60, 1080i/59.94, 1080i/50, 1080p/24sF, 1080p/23.98sF, 720p/60, 720p/59.94, 720p/50, 1035i/59.94, 1035i/60, 480p/59.94, 525i/59.94 or 625i/50
- Minimum video input to output delay - 3 lines
- Maximum video input to output delay - 1 frame plus 3 lines
- 12 additional frames of delay can be added for interlaced video formats, 28 frames for progressive formats.
- Program Video output bypass relay protected on power loss
- Programmable output phase with respect to reference input
- Freeze on last good frame, or field, go to black on loss of video or pass input
- Synchronizes 4 groups of embedded audio and re-embeds 4groups
- Front panel LEDs indicate: module fault, video and embedded group presence, and AES input presence
- Serial remote data logging
- Adjustable video black level (brightness), Y level (contrast) and chroma level (saturation)
- Adjustable hue control for SD video standards
- Maximum audio input to output delay - equivalent to additional frames of video delay
- Synchronizes VANC data starting after switch line
- Synchronizes RP188 time codes
- Separate control of video and audio delay
- Audio Sample Rate Converters can be disabled, or set to automatically detect non-PCM data (i.e. Dolby-E) and disable on a per-input basis
- Independently adjustable audio levels and inversion on all channels
- Ability to combine any two inputs to any output (including monoaural down-mixes of all input stereo pairs)
- Reassignment of audio channels
- Synchronizes eight external AES signals
- Synchronized audio is output as 8 AES signals
- AES and embedded outputs can choose from two independent mixers
- AES outputs bypass relay protected on power loss
- De-embeds and embeds Dolby-E meta data to and from video VANC space
- VistaLINK® - capable offering remote control and configuration capabilities via SNMP (using VistaLINK® PRO, 9000NCP or 9000NCP2 Network Control Panel) is available when modules are used with the 3RU 7700FR-C frame and a 7700FC VistaLINK® Frame Controller module in slot 1 of the frame

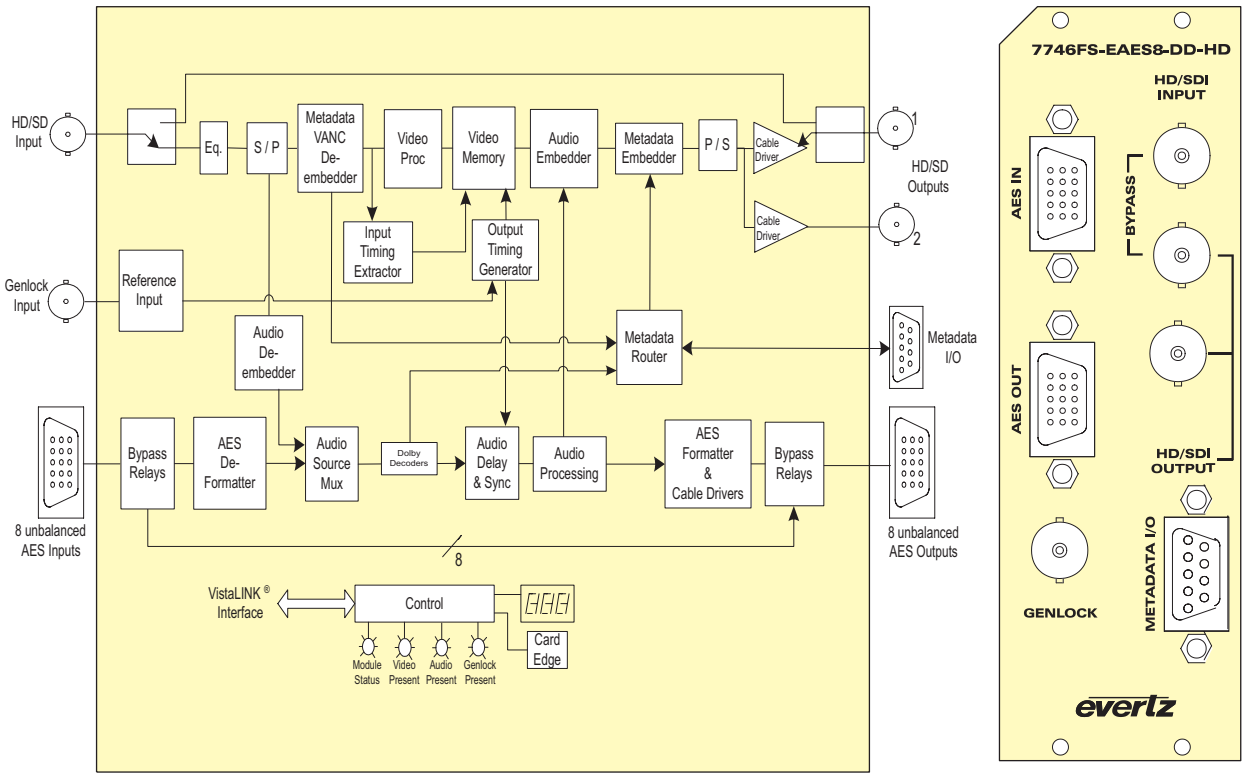

Specifications

Serial Video Input:
Standard: DIP switch selectable 1.485Gb/s SMPTE 292M - SMPTE 274M, SMPTE 296M, SMPTE 349M 270Mb/s SMPTE 259M-C 525i/59.94 or 625i/50
Connector: BNC per IEC 60169-8 Amendment 2
Input Equalization:
SD: Automatic to 300m @ 270Mb/s with Belden 1694A or equivalent cable
HD: Automatic to 115m @ 1.5Gb/s with Belden 1694A or equivalent cable
Return Loss:
SD: >15dB up to 270MHz
HD: >13dB up to 1.5GHz

Serial Video Outputs:
Number of Outputs: 2 (1 output is bypass relay protected)
Connectors: BNC per IEC 60169-8 Amendment 2
Signal Level: 800mV nominal
DC Offset: 0V ±0.5V
Rise and Fall Time: 200ps nominal (HD) or 900ps nominal (SD)
Overshoot: < 10% of amplitude
Wide Band Jitter: < 0.16 UI (HD) or < 0.10 UI (SD)

Genlock Input:
Type: HD Tri-level Sync NTSC or PAL Color Black 1V p-p, or Composite bi-level sync (525i/59.94 or 625i/50) 300mV
Connector: BNC per IEC 60169-8 Amendment 2
Termination: 75Ω (jumper selectable)

AES Audio Input:
Standard: SMPTE 276M
Number of Inputs: 8 unbalanced
Connector: Female High Density dB-15 (breakout cable to BNC provided)
Input Level: 0.1 to 2.5V p-p (5V p-p tolerant)
Input Impedance: 75Ω
Return Loss: >25dB 100kHz to 6MHz
Equalization: Automatic to 1000m with Belden 1694A (or equivalent) @ 48kHz AES signal
Sample Rate: 48kHz ±100ppm

AES Audio Output:
Standard: SMPTE 276M, single ended AES
Number of Outputs: 8 unbalanced
Connector: Female High Density dB-15 (breakout cable to BNC provided)
Sample Rate: 48kHz
Impedance: 75Ω
Resolution: 24-bit

Meta-Data:
Type: Dolby E Metadata
Standard: RS-422
Connector: Female dB-9
Baud Rate: 115,200 baud

Processing Functions:
Video:
Black Level: ±7%
Luminance Gain: ±6dB
Chrominance Gain: ±6dB
Hue: ±20° (SD)
Audio:
Gain: ±24dB (including invert)
Remapping: Any input or mix of any two inputs to any output

Input To Output Processing Delay:
Video Processing Delay:
Minimum Delay Mode: 3 lines to 1 frame plus 3 lines
Additional Delay Mode: Up to 12 frames for interlaced formats (28 frames for progressive formats) of additional delay (1 frame increments)

Data Logging Serial Port:
Standard: RS 232
Connector: Software upgrade cable female dB-9
Baud Rate: 115,200
Format: 8 bits, no parity, and 2 stop bits

Electrical:
Voltage: +12V DC
Power: 15.5W
EMI/RFI: Complies with FCC Part 15, Class A EU EMC Directive

Physical:
7700 frame mounting: 2 slots
7701 frame mounting: 1 slot

Ordering Information

7746FS-EAES8-DD-HD
HD/SD-SDI Frame Synchronizer with Dolby E/AC-3 Decoder & 8 AES Support

Ordering Option Rear Plate must be specified at time of order
Eg: Model +3RU

Rear Plate Suffix
+3RU 3RU Rear Plate for use with 7700FR-C Multiframe
+1RU 1RU Rear Plate for use with 7701FR Multiframe
+SA Standalone Enclosure Rear Plate

Accessories
WPAES8-BNCM-6F Cable (included)

7700FC VistaLINK® Frame Controller
9000NCP 1RU VistaLINK® General Purpose Network Control Panel
9000NCP2 2RU VistaLINK® General Purpose Network Control Panel

Enclosures
7700FR-C 3RU Multiframe which holds up to 15 single slot modules
7701FR 1RU Multiframe which holds up to 3 single or dual slot modules
S7701FR Standalone enclosure

7743DLY-HD

HD/SD-SDI Video Delay

The 7743DLY-HD is a full function HD/SD-SDI Video Delay module designed for applications such as satellite uplink, signal re-entry on master control inputs, at cable headends, mobile vehicle outputs, broadcast transmitter inputs, virtual sets and matching delays caused by multi-channel audio compression.

The 7743DLY-HD can act as a delay for SD video (SMPTE 259M) or for HD video (SMPTE 292M). The same technology built on our clean switch router line (X-series) is utilized here.

The 7743DLY-HD is capable of up to 3.2 seconds of delay for HD and up to 16.5 seconds of delay for SD. With the broadcast environment in mind, the modules feature bypass relay protection on output. The 7743DLY-HD module is housed in a 3RU frame that will hold up to seven 7743DLY-HD modules or a 1RU frame that will hold up to 3 modules.

Features & Benefits

- Full signal delay capability including VBI and ANC DATA for SMPTE 292M (1.5Gb/s) signals
- 7743DLY-HD also supports full signal delay capability including VBI for SMPTE 259M (270Mb/s) signals
- Delay programmable in video units (frames, lines, and samples) or as time units (seconds)
- Auto senses video standard
- Bypass relay for program path protection on power loss
- Up to 3.2 seconds delay for HD
- Up to 16.5 seconds delay for SD
- Card edge controls operate on-screen menu system to program delay settings
- Input circuit features a line buffer which is suitable for "de-glitching" hot switches on upstream equipment (very useful for HD equipment)
- VistaLINK® - capable offering remote control and configuration capabilities via SNMP (using VistaLINK® PRO, 9000NCP or 9000NCP2 Network Control Panel) is available when modules are used with the 3RU 7700FR-C frame and a 7700FC VistaLINK® Frame Controller module in slot 1 of the frame

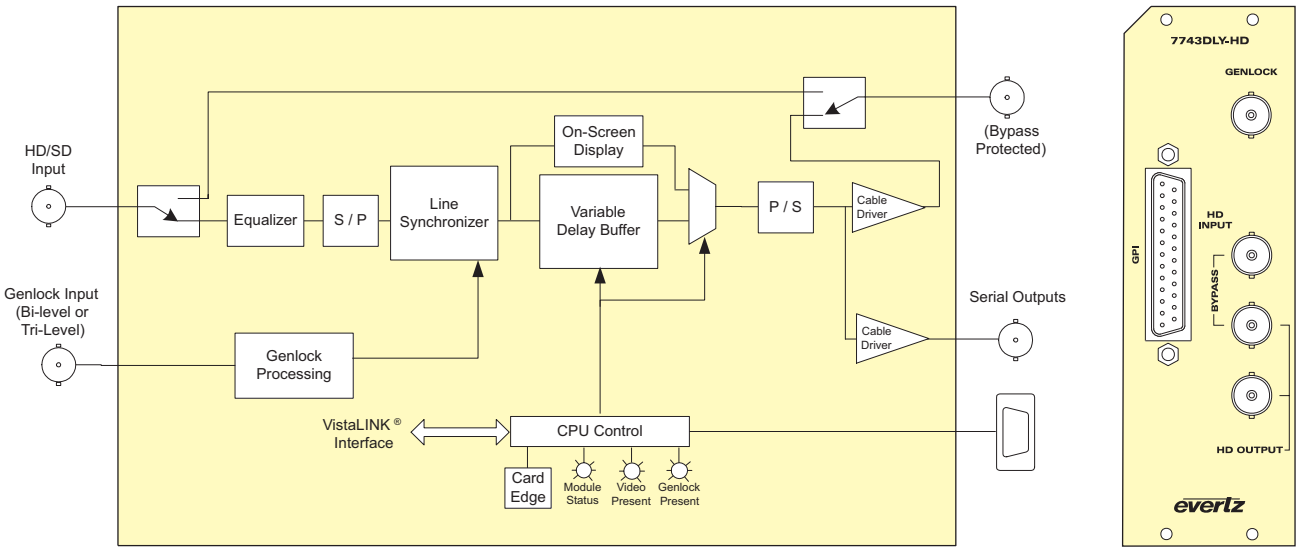

Specifications

High Definition Serial Digital Video:

Standard:	SMPTE 292M (1.5Gb/s) or SMPTE 259M (270Mb/s)
Connector:	BNC per IEC 60169-8 Amendment 2
Equalization:	Automatic to 75m @ 1.5Gb/s with Belden 1694A or equivalent cable
Return Loss:	> 15dB up to 1.0Gb/s > 10dB up to 1.5Gb/s (with relay)

Standard Definition Serial Digital Video:

Standard:	SMPTE 259M (270Mb/s)
Connector:	BNC per IEC 60169-8 Amendment 2
Return Loss:	> 15dB up to 270Mb/s

Serial Video Outputs:

Number of Outputs:	1 with relay bypass, 1 additional output
Connector:	BNC per IEC 60169-8 Amendment 2
Signal Level:	800mV nominal
DC Offset:	0V ±0.5V
Rise and Fall Time:	200ps nominal (HD), 740ps nominal (SD)
Overshoot:	< 10% of amplitude
Return Loss:	> 15dB up to 1.5Gb/s (HD), > 15dB up to 540Mb/s
Wide Band Jitter:	< 0.2 UI

Genlock Input:

Type:	HD Tri-level Sync, (See Table 3 in manual) NTSC or PAL Color Black 1V p-p, or Composite bi-level sync (525i/59.94 or 625i/50) 300mV
Connector:	BNC per IEC 60169-8 Amendment 2
Termination:	75Ω (jumper selectable)

Functional:

Minimum Delay:	65.5us (1770 samples) for standard definition, 37.7us (2800 samples) for high definition
Maximum Delay:	Approx. 16.5 seconds for standard definition, approx. 3.2 seconds for high definition

Electrical:

Voltage:	+12V DC
Power:	20W
EMI/RFI:	Complies with FCC Part 15, Class A EU EMC Directive

Physical:

7700 frame mounting:	2 slots
7701 frame mounting:	1 slot

Stand Alone Enclosure:

Dimensions:	14" L x 4.5" W x 1.9" H (355mm L x 114mm W x 48mm H)
Weight:	Approx. 1.5lbs (0.7kg)

Ordering Information

7743DLY-HD	HD/SD-SDI Video Delay
Ordering Options	Rear Plate must be specified at time of order Eg: Model +3RU

Rear Plate Suffix

+3RU	3RU Rear Plate for use with 7700FR-C Multiframe
+1RU	1RU Rear Plate for use with 7701FR Multiframe
+SA	Standalone Enclosure Rear Plate

Accessories

7700FC	VistaLINK® Frame Controller
9000NCP	1RU VistaLINK® General Purpose Network Control Panel
9000NCP2	2RU VistaLINK® General Purpose Network Control Panel

Enclosures

7700FR-C	3RU Multiframe which holds up to 15 single slot modules
7701FR	1RU Multiframe which holds up to 3 single or dual slot modules
S7701FR	Standalone Enclosure

This page left intentionally blank

HDSD9545DLY-PRO

HD/SD Video Delay/Time Shift Processor

In live shows, there is invariably the need to time-shift various feeds that contribute to the final production. This may be required to provide delays to accomplish profanity censorship, contribution backhaul delay mis-match compensation or compliance for other contractual obligations.

The Evertz HDSD9545DLY-PRO time shifting delay processor has been designed to give an operator complete control over the program content being broadcast to air. This new product enables the operator to insert the desired time delay via a front panel control and display panel. There are two program paths which are HD and SD compatible.

The main program feed will usually be focused on the main detailed action. Both channels are delayed by the same amount. If an unscheduled switch to an alternate source is required, the operator has only to hit one remote button to cause the program video and audio output to be clean switched to the alternative back-up channel. The output can be returned to the main program content with interruption to the video, or pops and clicks in the audio.

The delay can be adjusted from a minimum 2 frame program or to a maximum of 40 seconds of 1.5Gb/s HDTV or 240 seconds for SDTV (with the HD40 option). This max delay can be allocated to primary and secondary paths as per the user.

The HDSD9545DLY-PRO includes dual power supplies and a built-in HD/SD Quattro™ card which shows all four pictures on a single screen. The four pictures are as follows: Main program, Delayed Main program, Alternate input, Delayed Alternate input.

Features & Benefits

- HD or SD SDI compatible
- Embedded Audio and Discrete (4ch AES) Audio Support
- Monitoring outputs of delayed program and delayed backup can be provided
- Selectable quad split monitoring outputs
- Safe input frame capture
- Clean transition between program and backup feed
  - * SoftSwitch™ audio (patent pending)
  - * Clean switch video
- Supports program video blur features
- Relay bypass protection for video and audio
- Delay memory is solid state (no moving parts)
- No hard drive to fail or maintain
- Contact closure inputs for bypass triggering
- Programmable pre-trigger reaction time
- Delay on HDSD9545DLY-PRO: 24 seconds for HD or SD Delay
- Delay on HDSD9545DLY-PRO-HD40: 40 seconds for HD Delay or 240 seconds for SD Delay
- Delay is user-allocated between primary & secondary back-up paths
- Dual power supplies
- Min. 2 frame PGM delay and 2 frame safe delay

Specifications

Serial Digital Video Inputs

Standard:	SMPTE 292M (1.5Gb/s) - 1080i/59.94, 1080i/50, 720p/59.94 SMPTE 259M (270Mb/s) - 525i/59.94, 625i/50
Embedded Audio:	SMPTE 299M (HD) SMPTE 272M (SD)
Number of Inputs:	2
Connector:	BNC per IEC 60169-8 Amendment 2
Equalization:	
HD Video Stds:	Automatic up to 50m with Belden 1694A or equivalent cable
SD Video Stds:	Automatic up to 250m with Belden 8281 or equivalent cable
Return Loss:	> 15dB up to 1.0Gb/s, > 10dB at 1.5Gb/s

Serial Digital Video Outputs:

Standard:	Same as Inputs
Number of Outputs:	5 outputs (2 copies of Output A) Input A bypass protected to output A1
Connector:	BNC per IEC 60169-8 Amendment 2
Signal Level:	800mV nominal
DC Offset:	0V ±0.5V
Rise and Fall Time:	
HD Video Stds:	200ps nominal
SD Video Stds:	650ps nominal
Overshoot:	< 10% of amplitude
Wide Band Jitter:	< 0.2 UI
Output Return Loss:	
A1:	> 10dB up to 1.5Gb/s
Out A2, B, C, D, E:	> 15dB up to 1.5Gb/s
Output Phase:	0 to a full frame of offset - separate H and V phase adjustments

Video Reference:

Type:	NTSC or PAL Color Black 1V p-p Composite Bi-level sync (525i/59.94 or 625i/50) 300mV HD Tri-level Sync
Connectors:	BNC per IEC 60169-8 Amendment 2
Termination:	High impedance loop through or High impedance non-looping or 75Ω non-looping (jumper selectable)

AES Audio Inputs:

Standards:	SMPTE 276M single ended AES
Number of Inputs:	2 Groups of 4
Connector:	BNC per IEC 60169-8 Amendment 2
Signal Level:	1V p-p ±10%
Return Loss:	> 25dB up to 6MHz

AES Audio Outputs:

Standards:	SMPTE 276M single ended AES
Number of Outputs:	3 buses, 4 outputs per bus Safe AES Inputs bypass protected to AES A outputs when bypass relay option is installed
Connector:	BNC per IEC 60169-8 Amendment 2
Signal Level:	1V p-p
Return Loss:	> 35dB up to 6MHz
Reference:	From Video Reference

GPI Control Port:

Number of Inputs:	8 opto-isolated, active high or active low, programmable functions
Number of Outputs:	4 sets of relay contacts, normally closed, programmable functions
Relay Max Current:	1 A at 30V DC

Functional:

Maximum Total Delay(configurable between live and safe inputs):

HDSD9545DLY-PRO:	24 seconds of HD or SD delay
HDSD9545DLY-PRO-HD40:	40 seconds of HD delay or 240 seconds of SD delay

Electrical:

Voltage:	Auto ranging 100 to 240V AC, 50/60Hz - dual redundant power supplies
Fuse Rating:	250V, 1amp time delay
Power:	40W
Safety:	ETL Listed, complies with EU safety directives
EMI/RFI:	Complies with FCC Part 15 Class A regulations Complies with EU EMC directive

Physical:

Dimensions:	19" W x 3.5" H x 7.75" D. (483mm W x 89mm H x 196mm D)
Weight:	8lbs (3.5kg)

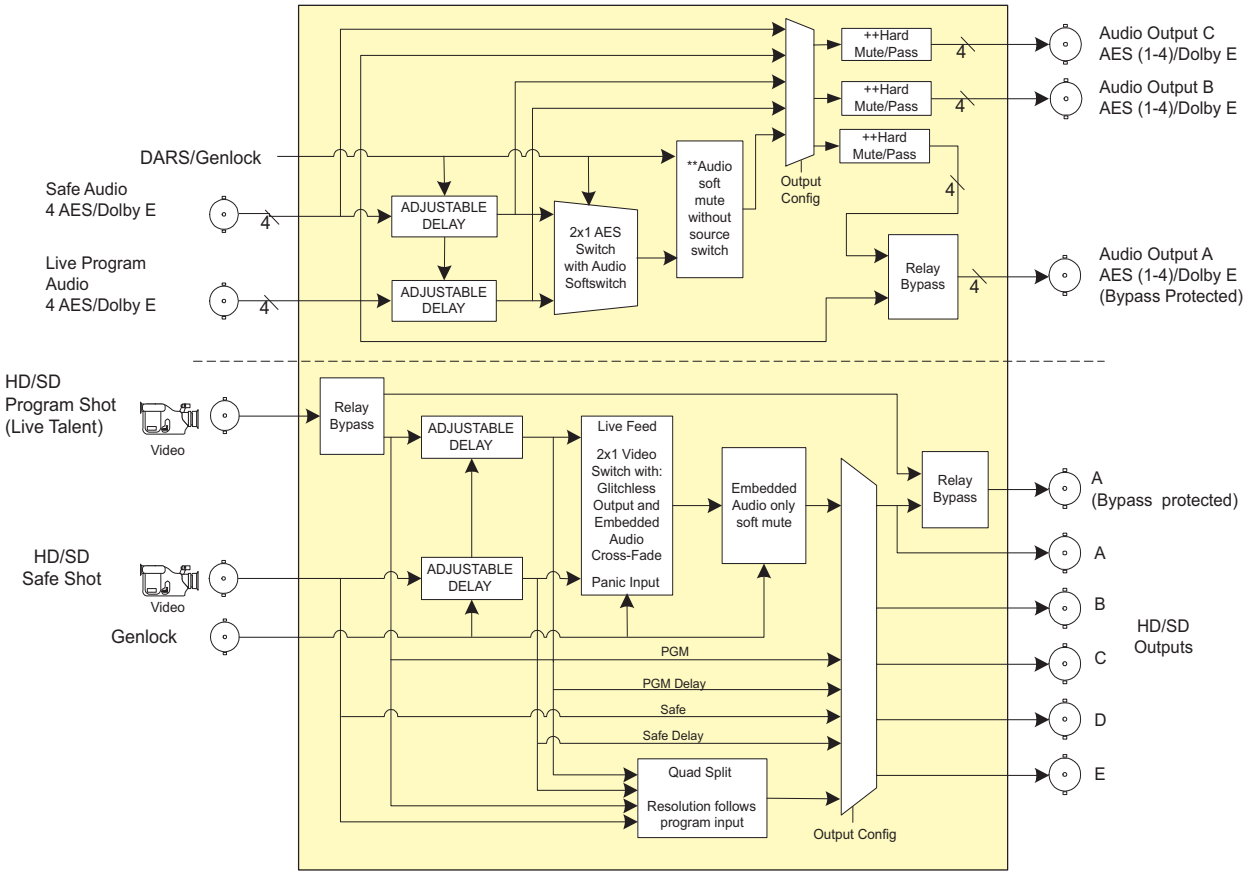

** Soft mutes only function when embedded audio softswitch is enabled
++ Hard mutes only function when delayed sources are selected

Ordering Information

HDSD9545DLY-PRO
HD/SD Video Delay/Time Shift Processor

7725VBI-K-HD

HD/SD-SDI VBI Sidechain Bridge Keyer

The 7725VBI-K-HD module is a multi-function VBI keyer. Every program input vertical interval video line can be programmed to pass upstream video, blank the line, insert any VBI line from the HD/SD Key input, insert a selectable VITS (vertical interval test signal) for SD, and insert user-selected data such as Wide Screen Signaling (WSS) and Active Format Description (AFD). The 7725VBI-K-HD allows for up to 70 lines to be programmed. The module provides the capability to store different VBI configurations as presets and recall them from the On-Screen Display (via Program Monitor Out), VistaLINK®, or via 8 opto-isolated GPI inputs.

The 7725VBI-K-HD has two re-clocked program outputs and one program monitor output. The module is often used in critical on-air applications and hence bypass relay protection of the program video path is provided. The 7725VBI-K-HD is setup via the On-Screen Display or VistaLINK®.

VistaLINK® enables remote monitoring, control and configuration capabilities via Simple Network Management Protocol (SNMP). This offers the flexibility to manage operations including signal monitoring and module configuration from SNMP enabled control systems (Manager or NMS) locally or remotely.

The 7725VBI-K-HD occupies one card slot in the 3RU 7700FR-C frame, which will hold up to 15 1-slot modules or the 1RU 7701FR frame, which will hold up to three 1-slot modules.

Features & Benefits

- One serial digital 1.5Gb/s HD input per SMPTE 292M, or 270Mb/s SD input per SMPTE 259M
- Two re-clocked HD or SD program outputs
- Video input relay bypass for power failure bypass protection
- One HD input or SD input digital Key video input
- One HD or SD monitor program output with On-Screen Display
- A comprehensive on-screen menu is available to configure the various features of the module
- 128 different presets for storing VBI keying configurations
- Up to 70 lines of output video can be programmed
- Up to 16 line patterns may be captured from any key input line and stored in User Memories for later insertion on any VBI line
- Each line of VBI independently programmable to pass, blank, insert from key signal, insert from user memory or insert factory test signal
- On-Air Preset configuration selected with GPI, OSD, or VistaLINK® selection
- Non-volatile memory protects current configuration in case of power loss
- Fully hot-swappable from front of frame
- VistaLINK® - capable for remote monitoring and control via SNMP (using VistaLINK® PRO) when installed in 7700FR-C frame with 7700FC VistaLINK® Frame Controller

7725VBI-K-HD Applications

Master control output chain protection

Typically there are several units "chained" together on the output of a master control switcher. Units such as caption encoders, AMOL. encoders, VITS inserters, data encoders, etc. are typically connected in series in the program output so that if one unit fails the network output will fail. The 7725VBI-K-HD allows you to have one point of insertion in the program output path.

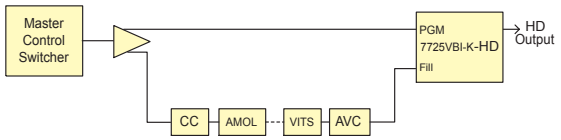

VANC Bridging

Some processing devices modify or destroy VBI data such as captioning or VITC. An example of this occurs with some DVE's during a squeeze back application or with HD color correction. The 7725VBI-K-HD device will provide a bypass of VBI around the processing device.

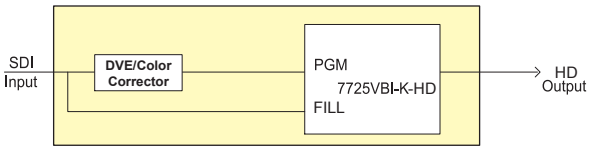

VBI Line Shuffler

By providing the same feet to both inputs of the 7725VBI-K-HD the unit will allow the user to modify the VBI and move lines as necessary.

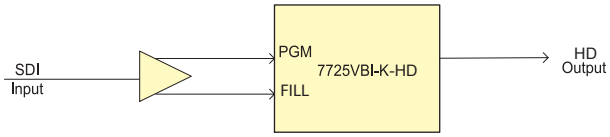

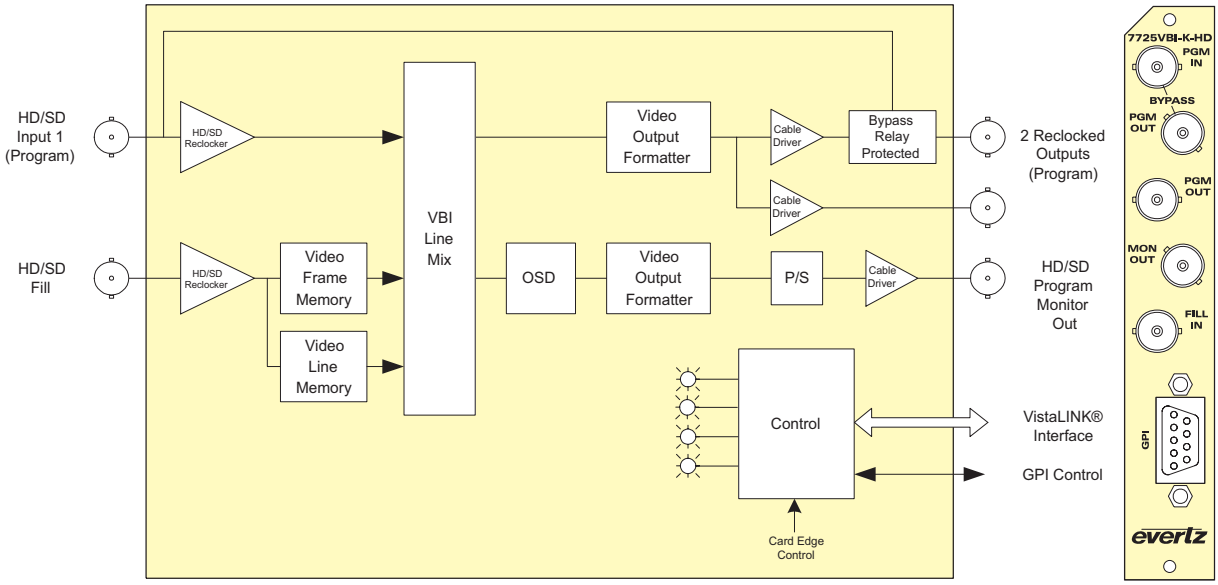

Specifications

Serial Video Input:

Standard:	Auto-detect SMPTE 292M (1080i/59.94, 1080i/60, 1080i/50, 1080p/23.98, 1080p/23.98sF, 720p/59.94, 720p/60, and 720p/50) SMPTE 259M-C (525i/59.94, 625i/50)
Number of Inputs:	1 for Program video (PGM) 1 for Key Signal to insert (FILL) PGM and FILL need to be synchronous and timed w.r.t. each other (±1/2 line)
Connector:	BNC input per IEC 60169-8 Amendment 2
Equalization:	Automatic 100m @ 1.5Gb/s with Belden 8281 or equivalent cable
Return Loss:	> 15dB (PGM input)

Serial Video Output:

Number of Outputs:	3 (re-clocked for program, 1 bypass protection) same as input 1 (program monitor) same as input
Connector:	BNC per IEC 60169-8 Amendment 2
Signal Level:	800mV nominal
DC Offset:	0V ±0.5V
Rise and Fall Time:	200ps nominal
Overshoot:	< 10% of amplitude
Wide Band Jitter:	< 0.20 UI
Return Loss:	> 15dB

General Purpose Inputs:

Number of Inputs:	8
Type:	Opto-isolated, active low with internal pull-ups to +5 or +12V (jumper settable)
Connector:	Female dB-9
Input signal:	Closure to ground

Electrical:

Voltage:	+12V DC
Power:	9.5W
EMI/RFI:	Complies with FCC Part 15 Class A EU EMC directive

Physical:

Number of slots:	1

Ordering Information

7725VBI-K-HD	HD/SD-SDI VBI Sidechain Bridge Keyer

Ordering Options	Rear Plate must be specified at time of order Eg: Model +3RU
Rear Plate Suffix	
+3RU	3RU Rear Plate for use with 7700FR-C Multiframe
+1RU	1RU Rear Plate for use with 7701FR Multiframe
+SA	Standalone Enclosure Rear Plate

Enclosures

7700FR-C	3RU Multiframe which holds up to 15 single slot modules
7701FR	1RU Multiframe which holds up to 3 single or dual slot modules
S7701FR	Standalone enclosure

7702DA4-RF, 7703DA4-RF

10MHz-3GHz RF 1x4 Active Splitter

The 7702DA4-RF & 7703DA4-RF 1x4 Active Splitters provide amplification and distribution of RF signals from 10MHz to 3GHz. The 7702DA4-RF & 7703DA4-RF handle any RF input modulation format and provide 4 buffered isolated outputs for further signal distribution. Typical applications include amplification and distribution of 950MHz-2150MHz L-Band and 70MHz-140MHz IF signals.

Monitoring of RF input power, card status and control of gain/attenuation is provided remotely via VistaLINK® capability on the 7703DA4-RF version. Optional LNB power is available at the input connector on the 7703DA4-RF version.

The 7702DA4-RF & 7703DA4-RF occupy one card slot and can be housed in either a 1RU frame which holds up to 3 modules, a 3RU frame which holds up to 15 modules or a standalone enclosure which holds 1 module.

Features & Benefits

- Low noise amplification and distribution of RF signals from 10MHz to 3GHz
- Wide dynamic range (-10 to -60dBm)
- Adjustable output gain of -8dB to +14dB on 7703DA4-RF version
- Fixed gain of 0dB on 7702DA4-RF version
- Protocol independent - handles all modulation formats
- Input RF signal strength indication on 7703DA4-RF version
- Fully hot-swappable from front of frame
- Optional LNB power (@ +13 or +17V DC with built-in current limiting) into RF input cable on 7703DA4-RF version
- Comprehensive signal and card status monitoring via four digit card edge display or remotely through SNMP and VistaLINK®
- VistaLINK® capability is available when modules are used with the 3RU 7700FR-C frame and a 7700FC VistaLINK® Frame Controller module in slot 1 of the frame

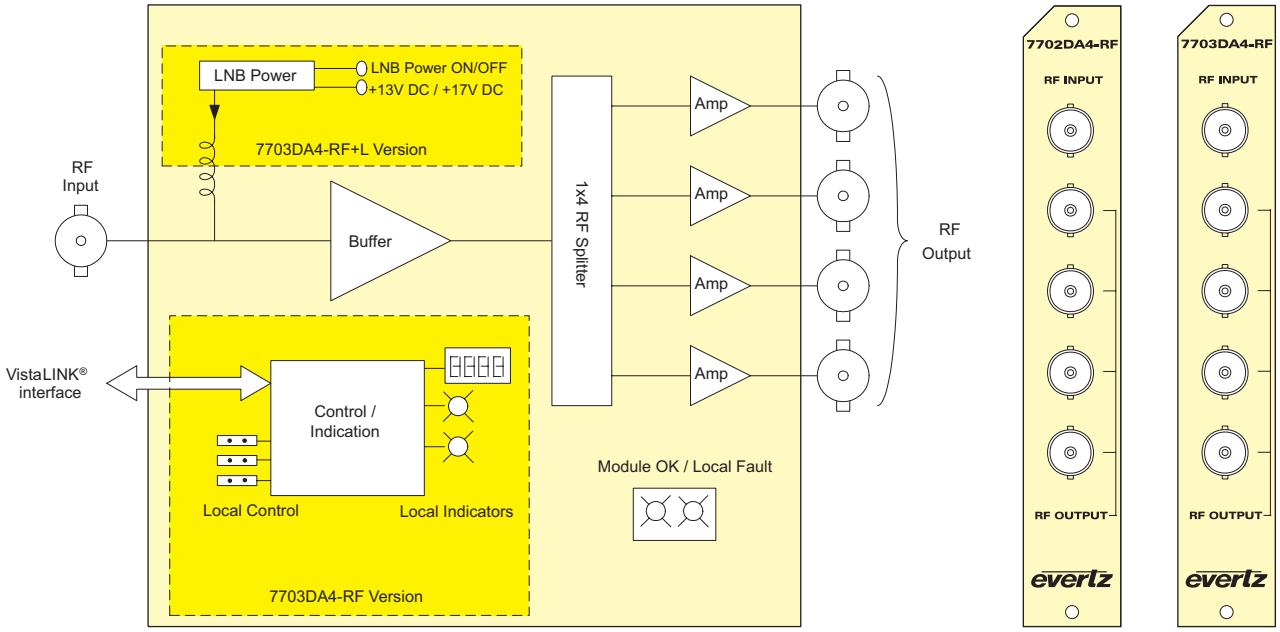

Specifications

RF Input:
Connector: 1 BNC per IEC 60169-8 Amendment 2 (F-Type optional)
I/O Impedance: 75Ω
Return Loss: > 12dB
Input Frequency Range:
Standard: 10MHz-3GHz
+L option: 950MHz-3GHz
Input Power Range: -10 to -60dBm

RF Output:
Number of outputs: 4
Connector: BNC per IEC 60169-8 Amendment 2 (F-Type optional)
I/O Impedance: 75Ω
Return Loss:
10MHz to 2200MHz: > 15dB
2200MHz to 3GHz: > 10dB
Gain:
7702DA4-RF: 0dB
7703DA4-RF: -8dB to +14dB
Intermodulation Products: < -50dBc (@ -20dBm input power)
Signal To Noise: > 55dB (@ -20dBm input power)
Frequency Response:
Standard Version:
10MHz to 2.7GHz: < ±1.5dB
2.7GHz to 3GHz: < ±2dB
+L Version:
950MHz to 2.7GHz: < ±1.5dB
2.7GHz to 3GHz: < ±2dB
Isolation (Output to Output):
10MHz to 350MHz: > 15dB
350MHz to 3GHz: > 20dB

Physical:
Number of Slots: 1

Electrical:
Voltage: +12V DC
Power: 6W

Ordering Information:

7702DA4-RF	10MHz-3GHz RF 1x4 Active Splitter
7703DA4-RF-L	10MHz-3GHz RF 1x4 Active Splitter with LNB power and VistaLINK® Monitoring

Ordering Options Rear Plate must be specified at time of order
Eg: Model +3RU

Rear Plate Suffix

+3RU	3RU Rear Plate for use with 7700FR-C Multiframe
+1RU	1RU Rear Plate for use with 7701FR Multiframe
+SA	Standalone Enclosure Rear Plate

Connector Suffix

+F75	75Ω, F-Type rear connector

Enclosures

7700FR-C	3RU Multiframe which holds up to 15 single slot modules
7701FR	1RU Multiframe which holds up to 3 single or dual slot modules
S7701FR	Standalone enclosure

The 7702DA8-RF & 7703DA8-RF 1x8 Active Splitters provide amplification and distribution of RF signals from 10MHz to 3GHz. The 7702DA8-RF & 7703DA8-RF handle any RF input modulation format and provide 8 buffered isolated outputs for further signal distribution. Typical applications include amplification and distribution of 950MHz-2150MHz L-Band and 70MHz-140MHz IF signals.

Monitoring of RF input power, card status and control of gain/attenuation is provided remotely via Vistalink capability on the 7703DA8-RF version. Optional LNB power is available at the input connector on the 7703DA8-RF version.

The 7702DA8-RF & 7703DA8-RF occupy two card slots and can be housed in either a 1RU frame which holds up to 3 modules, a 3RU frame which holds up to 15 modules or a standalone enclosure which holds 1 module.

Features & Benefits

- Low noise amplification and distribution of RF signals from 10MHz to 3GHz
- Wide dynamic range (-10 to -60dBm)
- Adjustable output gain of -8dB to +14dB on 7703DA8-RF version
- Fixed gain of 0dB on 7702DA8-RF version
- Protocol independent - handles all modulation formats
- Input RF signal strength indication on 7703DA8-RF version
- Fully hot-swappable from front of frame
- Optional LNB power (at +13 or +17V DC with built in current limiting) into RF input cable on 7703DA8-RF version
- Comprehensive signal and card status monitoring via four digit card edge display or remotely through SNMP and VistaLINK®
- VistaLINK® capability is available when modules are used with the 3RU 7700FR-C frame and a 7700FC VistaLINK® Frame Controller module in slot 1 of the frame

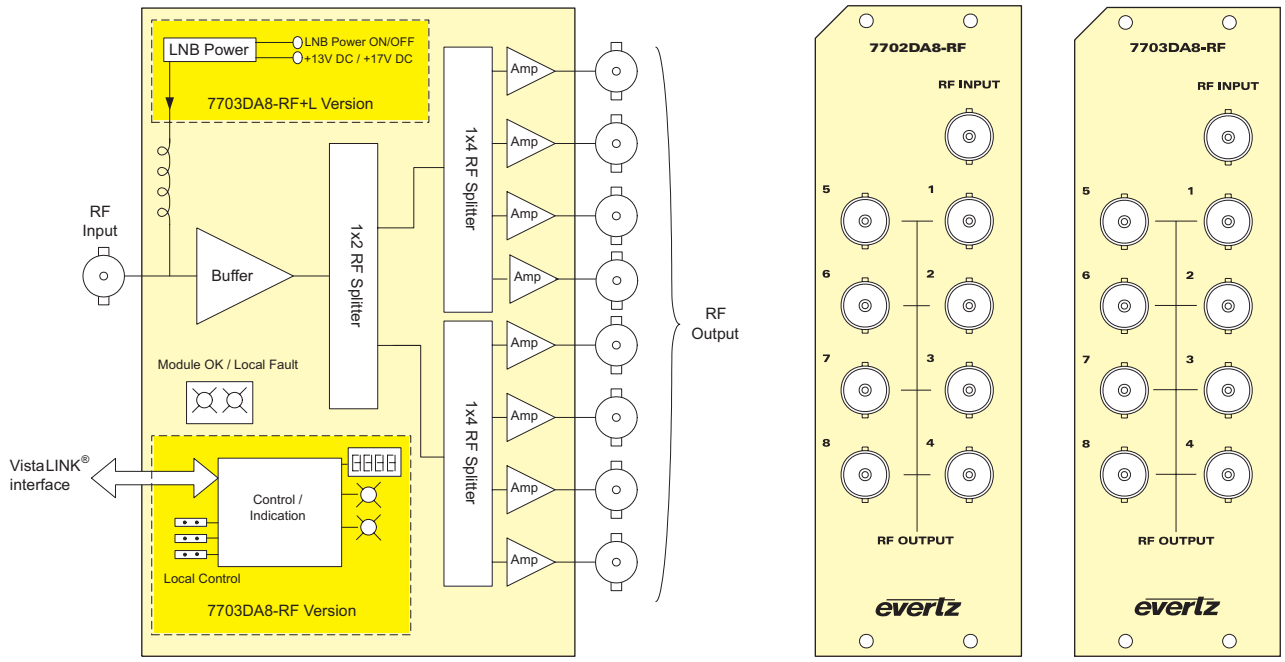

Specifications

RF Input:
Connector: 1 BNC per IEC 60169-8 Amendment 2 (F-Type optional)
I/O Impedance: 75Ω
Return Loss > 12dB
Input Frequency Range:
Standard: 10MHz-3GHz
+L option: 950MHz-3GHz
Input Power Range: -10 to -60dBm

RF Output:
Number of outputs: 8
Connector: BNC per IEC 60169-8 Amendment 2 (F-Type optional)
I/O Impedance: 75Ω
Return Loss
10MHz to 2200MHz: > 15dB
2200MHz to 3GHz: > 10dB
Gain:
7702DA8-RF: 0dB
7703DA8-RF: -8dB to +14dB
Intermodulation Products: < -50dBc (@ -20dBm input power)
Signal To Noise: > 55dB (@ -20dBm input power)
Frequency Response:
Standard Version:
10MHz to 2.7GHz: < ±1.5dB
2.7GHz to 3GHz: < ±2dB
+L Version:
950MHz to 2.7GHz: < ±1.5dB
2.7GHz to 3GHz: < ±2dB

Isolation (Output to Output):
10MHz to 350MHz: > 15dB
350MHz to 3GHz: > 20dB

Physical:
Number of Slots: 2

Electrical:
Voltage: +12V DC
Power: 10W

Ordering Information

7702DA8-RF	10MHz-3GHz RF 1x8 Active Splitter
7703DA8-RF-L	10MHz-3GHz RF 1x8 Active Splitter with LNB power and VistaLINK® Monitoring

Ordering Options Rear Plate must be specified at time of order
Eg: Model +3RU

Rear Plate Suffix

+3RU	3RU Rear Plate for use with 7700FR-C Multiframe
+1RU	1RU Rear Plate for use with 7701FR Multiframe
+SA	Standalone Enclosure Rear Plate

Connector Suffix

+F75	75Ω, F-Type rear connector

Enclosures

7700FR-C	3RU Multiframe which holds up to 15 single slot modules
7701FR	1RU Multiframe which holds up to 3 single or dual slot modules
S7701FR	Standalone enclosure

7702BPX-IF, 7703BPX-IF

2x1 RF Protection Switch for IF Frequencies

The 7702BPX-IF and 7703BPX-IF 2x1 RF protection switches for IF frequencies provide automatic changeover functionality to protect against link failure for RF signals from 10MHz to 850MHz. Typical applications include failover protection for 70/140MHz applications.

The 7703BPX-IF has integrated VistaLINK® technology for remote control and monitoring capability via SNMP. This provides the ability to locally or remotely configure and monitor parameters such as module status, selected input, power level and switching threshold.

In the application of automatic changeover, the 7702BPX-IF and 7703BPX-IF can be configured to have a MAIN input and a STANDBY input. In this configuration, it will automatically switch to the Standby input when the Main input power is weak or lost. It can be also be configured to have auto or manual switch back to the Main input when the signal is re-established.

The 7702BPX-IF and 7703BPX-IF occupy one card slot and can be housed in either a 1RU frame which holds up to 3 modules, a 3RU frame which holds up to 15 modules or a standalone enclosure which holds 1 module.

Features & Benefits

- Wide operating frequency range, 10MHz to 850MHz
- Intelligent auto switching with input power detection
- User-definable threshold levels on 7703BPX-IF version
- Maintains switch state and RF channel on loss of power to card or frame
- Supports automatic or manual control via GPI or SNMP on 7703BPX-IF
- Switch state indication via GPO
- Card edge LEDs indicate active input channels, output channel and power levels below threshold
- Fully hot-swappable from front of frame
- Comprehensive signal and card status monitoring via four digit card edge display or remotely through SNMP and VistaLINK® on 7703 version
- VistaLINK® capability is available when 7703BPX-IF modules are used with the 3RU 7700FR-C frame and a 7700FC VistaLINK® Frame Controller module in slot 1 of the frame

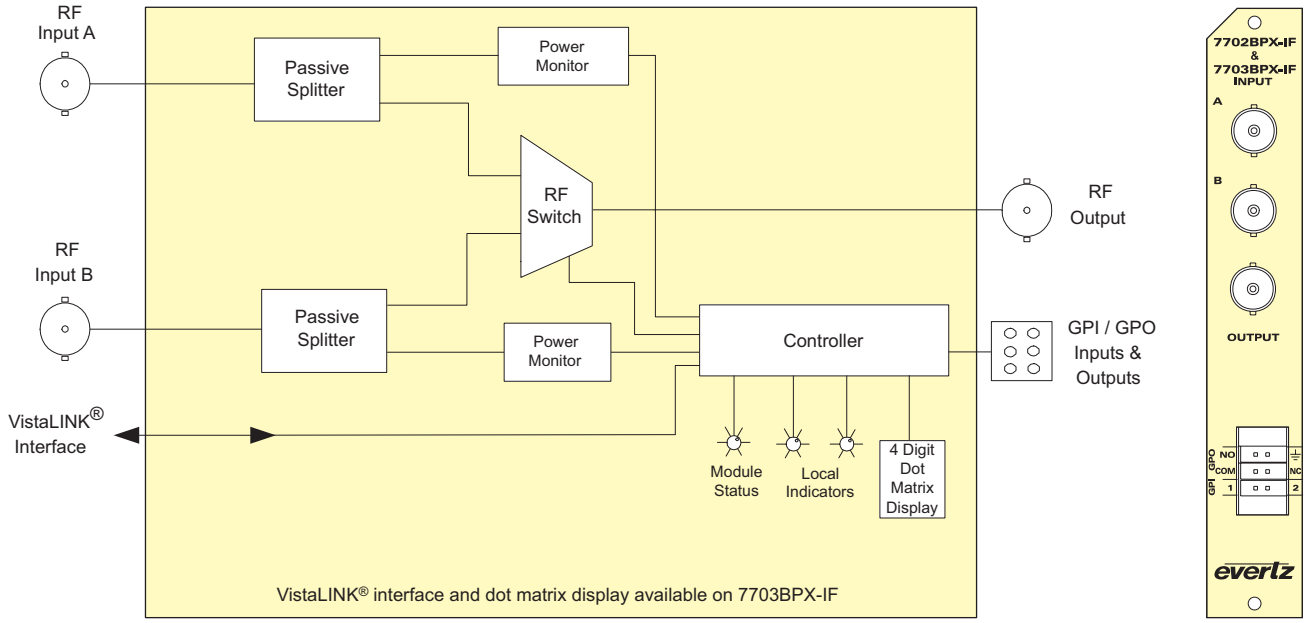

Specifications

RF Input/Output:

Inputs:	2
Outputs:	1
Connector:	BNC per IEC 60169-8 Amendment 2 (F-type optional)
I/O Impedance:	75Ω
Frequency Response:	
10-200MHz:	< ±0.25dB
10-850MHz:	< ±0.5dB
Insertion Loss:	< 4dB
Return Loss:	
10-200MHz:	< 15dB
10-850MHz:	< 17dB
Isolation:	> 50dB (10-850MHz)
Input Power Range:	0dBm to -50dBm

General Purpose Inputs:

Number of Inputs:	2
Type:	Opto-isolated, active low with internal pull-ups to +5V
Connector:	2 pins plus ground on 6-pin terminal strip
Signal Level:	
+5V Pullup:	Low: -5 to +2.5 V DC, High: 3.5 to 10 V DC
+12V Pullup:	Low: -5 to +9.5 V DC, High: 10.5 to 15 V DC
Max Sink Current:	(input shorted to ground) 15 mA
Max Leakage Current for input High:	200µA

General Purpose Outputs:

Number of Outputs:	1
Type:	"Dry Contact" relay contacts - normally open & normally closed contact provided
Connector:	3 pins on 6-pin terminal strip

Electrical:

Voltage:	+12V DC
Power:	3W

Physical:

Number of Slots:	1

Ordering Information:

7702BPX-IF	2x1 RF Protection Switch for IF Frequencies
7703BPX-IF	2x1 RF Protection Switch for IF Frequencies, with VistaLINK® monitoring

Ordering Options Rear Plate and optional connector type must be specified at time of order
Eg: Model +3RU (if 75Ω F-type connector required, order optional +F75)

Rear Plate Suffix

+3RU	3RU Rear Plate for use with 7700FR-C Multiframe
+1RU	1RU Rear Plate for use with 7701FR Multiframe
+SA	Standalone Enclosure Rear Plate

Connector Suffix

+F75	75Ω, F-Type Rear Connector

Enclosures

7700FR-C	3RU Multiframe which holds up to 15 single slot modules
7701FR	1RU Multiframe which holds up to 3 single or dual slot modules
S7701FR	Standalone enclosure

The 7702BPX-LB and 7703BPX-LB 2x1 RF protection switches for L-Band frequencies provide automatic changeover functionality to protect against link failure for RF signals from 950MHz to 2250MHz.

The 7703BPX-LB has integrated VistaLINK® technology for remote control and monitoring capability via SNMP. This provides the ability to locally or remotely configure and monitor parameters such as module status, selected input, power level and switching threshold.

In the application of automatic changeover, the 7702BPX-LB and 7703BPX-LB can be configured to have a MAIN input and a STANDBY input. In this configuration, it will automatically switch to the Standby input when the Main input power is weak or lost. It can be also be configured to have auto or manual switch back to the Main input when the signal is re-established.

The 7702BPX-LB and 7703BPX-LB occupy one card slot and can be housed in either a 1RU frame which holds up to 3 modules, a 3RU frame which holds up to 15 modules or a standalone enclosure which holds 1 module.

Features & Benefits

- Wide operating frequency range, 950MHz-2250MHz
- Intelligent auto switching with input power detection
- User-definable threshold levels on 7703BPX-LB version
- Maintains switch state and RF channel on loss of power to card or frame
- Supports automatic or manual control via GPI or SNMP on 7703BPX-LB
- Switch state indication via GPO
- Card edge LEDs indicate active input channels, output channel and power levels below threshold
- Fully hot-swappable from front of frame
- Comprehensive signal and card status monitoring via four digit card edge display or remotely through SNMP and VistaLINK® on 7703 version
- VistaLINK® capability is available when 7703BPX-LB modules are used with the 3RU 7700FR-C frame and a 7700FC VistaLINK® Frame Controller module in slot 1 of the frame

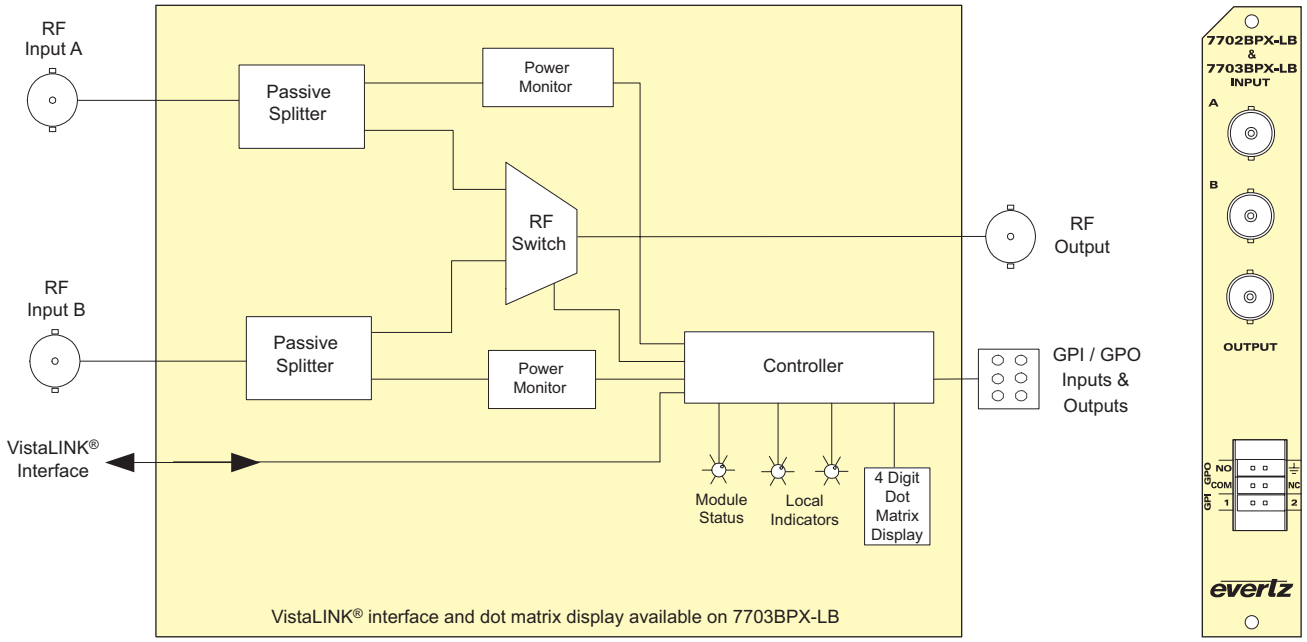

Specifications

RF Input/Output:

Inputs:	2
Outputs:	1
Connector:	BNC per IEC 60169-8 Amendment 2 (F-type optional)
I/O Impedance:	75Ω
Frequency Response: 950MHz to 2250MHz:	< ±1.5dB
Insertion Loss:	< 4dB
Return Loss:	> 10dB
Isolation:	> 50dB
Input Power Range:	0dBm to -50dBm

General Purpose Inputs:

Number of Inputs:	2
Type:	Opto-isolated, active low with internal pull-ups to +5V
Connector:	2 pins plus ground on 6-pin terminal strip
Signal Level:	
+5V Pullup:	Low: -5 to +2.5V DC, High: 3.5 to 10V DC
+12V Pullup:	Low: -5 to +9.5V DC, High: 10.5 to 15V DC
Max Sink Current:	(input shorted to ground) 15mA
Max Leakage Current for input High:	200µA

General Purpose Outputs:

Number of Outputs:	1
Type:	"Dry Contact" relay contacts - normally open & normally closed contact provided
Connector:	3 pins on 6-pin terminal strip

Electrical:

Voltage:	+12V DC
Power:	4W

Physical:

Number of Slots:	1

Ordering Information

7702BPX-LB	2x1 RF Protection Switch for L-Band Frequencies
7703BPX-LB	2x1 RF Protection Switch for L-Band Frequencies, with VistaLINK® Monitoring

Ordering Options Rear Plate and optional connector type must be specified at time of order
Eg: Model +3RU (if 75Ω F-type connector required, order optional +F75)

Rear Plate Suffix

+3RU	3RU Rear Plate for use with 7700FR-C Multiframe
+1RU	1RU Rear Plate for use with 7701FR Multiframe
+SA	Standalone Enclosure Rear Plate

Connector Suffix

+F75	75Ω, F-Type Rear Connector

Enclosures

7700FR-C	3RU Multiframe which holds up to 15 single slot modules
7701FR	1RU Multiframe which holds up to 3 single or dual slot modules
S7701FR	Standalone enclosure

7702LPS-2, 7703LPS-2

Dual Port LNB Power Inserters

The 7702LPS-2 & 7703LPS-2 dual port LNB power inserters offer a modular, high performance and compact platform for inserting DC power via coaxial cable to two LNBs. Housed in the 7700FR-C 3RU frame with dual power supplies, up to 30 (7702) or 28 (7703) LNBs can be powered with a single frame. On their input connectors, the cards provide +13/+18V DC power and 22kHz tone generation with low RF insertion loss. The 7703 version includes SNMP support for remote monitoring and control via VistaLINK® software, including LNB current and RF input power monitoring.

The 7702LPS-2 & 7703LPS-2 each occupy one card slot and can be housed in a 1RU frame which will hold up to 3 modules, a 3RU frame which will hold up to 15 modules or a standalone frame which will hold 1 module.

Features & Benefits

- Provide DC voltage of +13/+18V DC with available +1V DC (+14/+19V DC) cable compensation for long cable runs
- 22kHz tone generation available on both ports for LNB control
- DC voltage level and 22kHz tone generation are independently controllable on each port
- Dynamic or static short circuit current protection. Dynamic mode features continuous short circuit check and automatic recovery, while static mode disables DC voltage until a reset is performed. Both modes indicate the short circuit condition on card edge LEDs and VistaLINK® (7703 version)
- For system diagnostics and troubleshooting, the 7703 version provides RF input power and LNB current monitoring with adjustable thresholds for SNMP/VistaLINK® alarming
- 7700FR-C frame power supplies are redundant, front-loading and hot-swappable for reliability and ease of maintenance
- 7702 and 7703 cards are front loading and hot swappable for simple installation and maintenance
- 7703 cards feature full SNMP/VistaLINK® support and local card edge monitoring and control via the dot matrix display and toggle switch/pushbutton

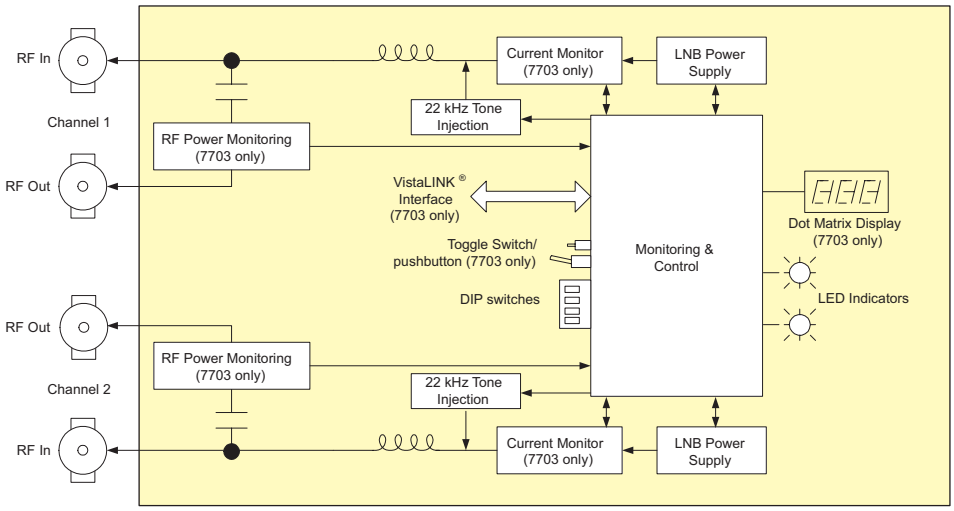

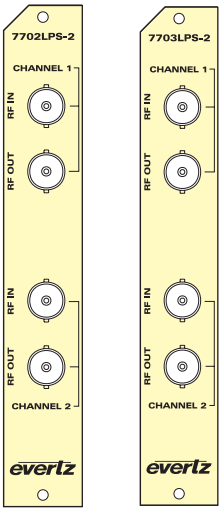

Specifications

RF Input/Output:

Connector:	BNC (F type connector optional)
I/O Impedance:	75Ω
Insertion Loss:	< 1.6dB (950-2250MHz)
Return Loss:	> 14dB (950-2250MHz)
Isolation:	> 60dB (950-2250MHz)

Electrical:

LNB DC Voltage:	+13 / +14 / +18 / +19V DC
Max LNB Current:	400mA

Electrical:

Voltage:	+12VDC
Power:	3 W with no LNB load
EMI/RFI:	Complies with FCC regulations for class A devices Complies with EU EMC directive.

Physical:

Number of slots:	1

Ordering Information

7702LPS-2	Dual Port LNB Power Inserter
7703LPS-2	Dual Port LNB Power Inserter with NMP/VistaLINK® support

Ordering Options	Rear Plate and Fiber Connector must be specified at time of order Eg. Model +3RU +SC
+F75	75Ω F type connectors

This page is intentionally left blank

7707ADVT

Analog or SDI Video with 4-Channel Analog or AES Audio Fiber Transmitter

Features & Benefits

- Single card fiber optic transmitter for one composite Analog or SDI video and four analog or AES audio signals
- Auto-sensing (analog or digital) video and audio inputs
- Supports both NTSC and PAL analog or 4:2:2 component digital video
- Supports Analog to Digital and Digital to Analog audio conversion
- Broadcast quality analog video and audio performance
- Meets or exceeds EIA/TIA RS250-C short haul specifications for analog video and audio transport
- Supports 32, 44.1, 48kHz AES audio inputs
- Dolby E compatible
- Comprehensive signal and card status monitoring via four digit card edge display or remotely through SNMP and VistaLINK®
- VistaLINK® capability is available when modules are used with the 3RU 7700FR-C frame and a 7700FC VistaLINK® Frame Controller module in slot 1 of the frame
- Adjustable gain equalization for analog video for up to 250m of Belden 1694A coaxial cable
- Fully Hot-swappable from front of frame with no fiber disconnect/reconnect required
- Supports single-mode and multi-mode fiber optic cable
- Optical output wavelengths at 1310nm, 1550nm and up to sixteen CWDM wavelengths (ITU G 694.2 compliant)
- DWDM wavelengths also available (ITU G.694.1 compliant)
- Outputs available with fiber optics and BNC or BNC's only (-NF version)

7707ADVT

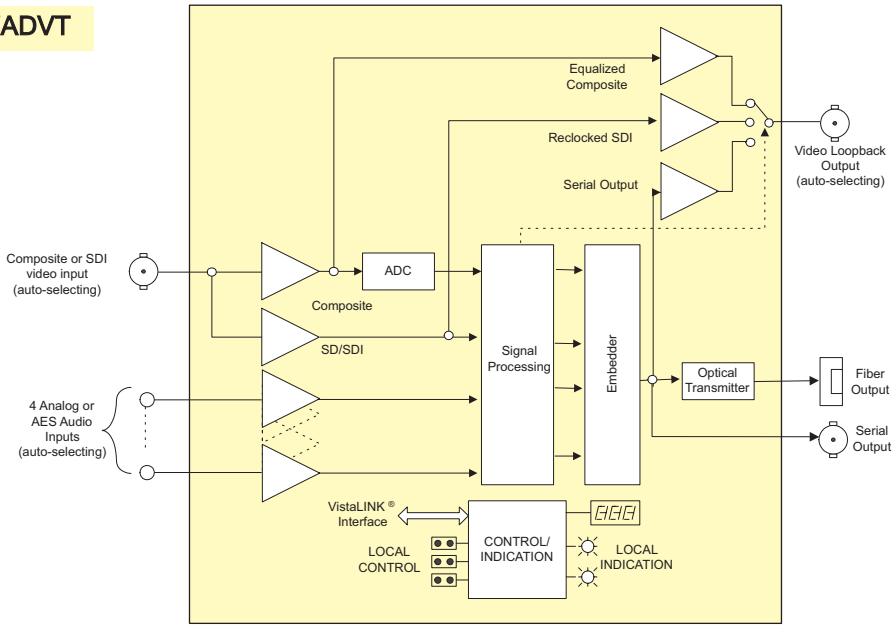

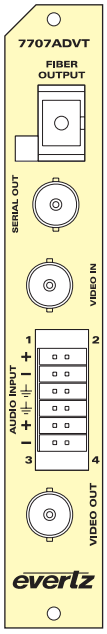

7707ADVT-NF

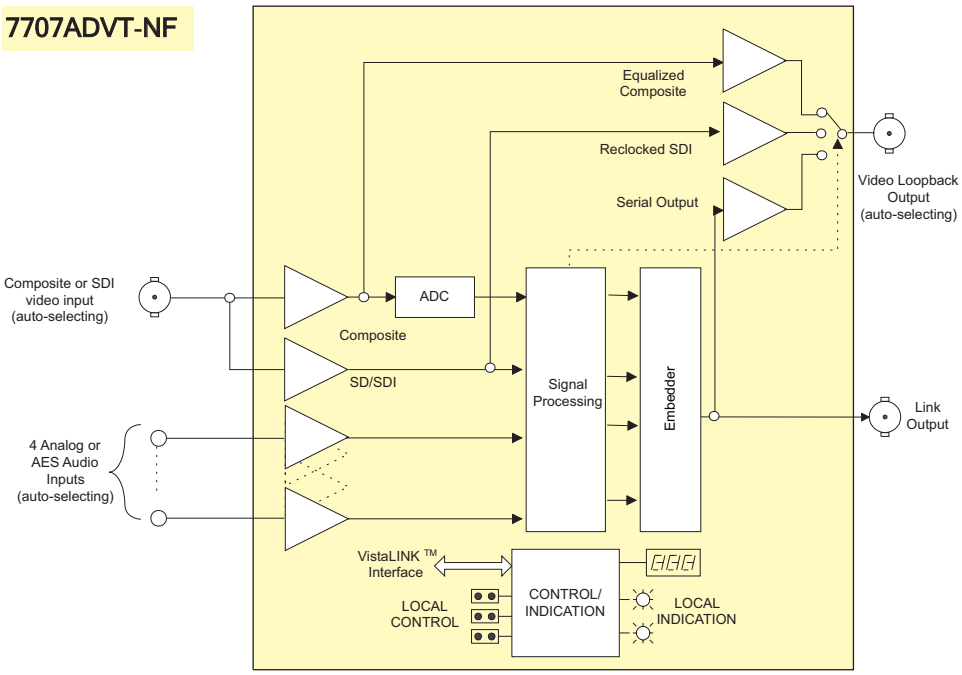

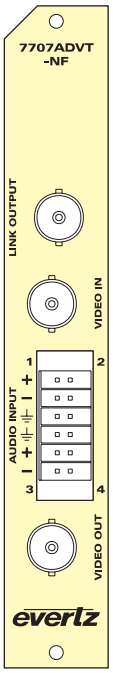

Specifications

Analog Video Input:

Standards:	SMPTE 170M (NTSC), ITU-R 624-2 (PAL)
Number of Inputs:	1
Connector:	BNC per IEC 60169-8 Amendment 2
Signal Quantization:	12 bit
System Bandwidth:	> 5.5MHz
Input Level:	2V p-p (Maximum)
Gain Equalization:	Up to 250m of Belden 1694A or equivalent (adjustable)
Input impedance:	75Ω
Return Loss:	> 30dB to 5.5MHz
Signal/Noise Ratio:	> 70dB
Differential Gain:	< 1.0%
Differential Phase:	< 0.7°
Passband Ripple:	
NTSC:	< ±0.1dB to 4.1MHz
	< ±0.2dB to 5.5MHz
PAL:	< ±0.1dB to 4.8MHz
	< ±0.2dB to 5.8MHz
Chroma/Luma Gain:	98% to 103%
Chroma/Luma Delay:	
NTSC:	< 5ns
PAL:	< 12ns
Line Time Distortion:	1.2%

Serial Video Input:

Standard:	SMPTE 259M-C (525 or 625 line component), SMPTE 305M (SDTi), DVB-ASI (without separate audio)
Connector:	1 BNC per IEC 60169-8 Amendment 2
Equalization:	Automatic to 300m @ 270Mb/s with Belden 1694A or equivalent cable
Return Loss:	> 15dB up to 270Mb/s

Analog Video Output:

Standard:	Same as Analog Video Input
Number of Outputs:	1
Connector:	BNC per IEC 60169-8 Amendment 2
Output Level:	1V p-p
Output Impedance:	75Ω
Return Loss:	> 30dB to 5.5MHz

Serial Video Output:

Number of Outputs:	2 (1 loopback, 1 serial)
Connector:	BNC per IEC 60169-8 Amendment 2
Signal Level:	800mV nominal
DC Offset:	0V ±0.5V
Rise and Fall Time:	900ps nominal
Overshoot:	< 10% of amplitude
Return Loss:	> 15dB at 270Mb/s
Wide Band Jitter:	< 0.2 UI

Analog Audio Inputs:

Number of Inputs:	4
Type:	Balanced analog audio
Connector:	12-pin removable terminal block
Input impedance:	High Impedance (> 20kΩ)
Freq. Response:	±0.1dB, 20Hz to 20kHz
THD 20Hz-20kHz:	< 0.005%
Channel Phase Diff.:	±1°
SNR (weighted):	> 85dB
Max. Audio Input Level:	
	+24dBu
Signal Quantization:	24 Bits

AES Audio Inputs:

Number of Inputs:	4 (auto-sensing for balanced or unbalanced input)
Standard:	
Unbalanced AES:	SMPTE 276M
Balanced AES:	AES3-1992
Other:	Dolby E compatible
Connector:	12-pin removable terminal block
Input Return Loss:	> 15dB (1MHz to 6MHz)
Signal Level:	
Unbalanced:	1.2V p-p ±0.1V
Balanced:	1 to 7V p-p
Equalization:	
Unbalanced:	450m of Belden 1800D cable
Balanced:	1500m of Belden 1694A cable
Resolution:	Up to 24 bits
Sampling Rate:	32, 44.1, 48kHz
Impedance:	
Unbalanced:	75Ω
Balanced:	110Ω

Optical Outputs:

Number of Outputs:	1
Connector:	Female SC/PC, ST/PC or FC/PC
Return Loss:	> 14dB
Rise and Fall Time:	200ps nominal
Fiber Size:	9µm core/125µm overall
Wavelengths:	
Standard:	1310nm, 1550nm (nominal)
CWDM:	See Ordering Information
DWDM:	See Ordering Information
Output Power:	
1310nm FP (Standard):	-7dBm ±1dBm
1310nm FP (M version):	0dBm ±1dBm
1550 & CWDM DFB:	0dBm ±1dBm
DWDM DFB	+7dBm ±1dBm

Electrical:

Voltage:	+12V DC
Power:	10W (Non DWDM), 12W (DWDM)

Physical:

Number of slots:	1

Compliance:

Electrical Safety:	CSA Listed to UL 60065-03, IEC 60065 Complies with CE Low voltage Directive
Laser Safety:	Class 1 laser product Complies with 24 CFR 1040.10 and 1040.11 IEC 60825-1
EMI/RFI:	Complies with FCC Part 15, Class A EU EMC directive

Ordering Information

7707ADVT13	Analog or SDI Video 84 Analog or 4 AES audio Fiber Transmitter, 1310nm laser, VistaLINK®
7707ADVT15	Analog or SDI Video 84 Analog or 4 AES audio Fiber Transmitter, 1550nm DFB Laser, VistaLINK®
7707ADVT-NF	Electrical output only

For CWDM applications please refer to the end of the fiber section for details

7707ADVTxx	Analog or SDI Video & 4 Analog or 4 AES audio fiber transmitter, CWDM Laser, VistaLINK®

For DWDM applications please refer to the end of the fiber section for details

7707ADVTDxxx	Analog or SDI Video & 4 Analog or 4 AES audio fiber transmitter, DWDM Laser, VistaLINK®

Ordering Options	Rear Plate and Fiber Connector must be specified at time of order Eg: Model +SC +3RU
Rear Plate Suffix	
+3RU	3RU Rear Plate for use with 7700FR-C Multiframe
+1RU	1RU Rear Plate for use with 7701FR Multiframe
+SA	Standalone Enclosure Rear Plate
Connector Suffix	
+SC	SC/PC
+ST	ST/PC
+FC	FC/PC
Enclosures	
7700FR-C	3RU Multiframe which holds up to 15 single slot modules
7701FR	1RU Multiframe which holds up to 3 single or dual slot modules
S7701FR	Standalone Enclosure

7707ADVR

Analog or SDI Video with 4-Channel Analog or AES Audio Fiber Receiver

Features & Benefits

- Single card fiber optic receiver for one composite Analog or SDI video and four analog or AES audio signals
- Auto sensing (analog or digital) video and audio outputs
- Supports both NTSC and PAL analog or 4:2:2 component digital video
- Supports Analog to Digital and Digital to Analog audio conversion
- Broadcast quality analog video and audio performance
- Meets or exceeds EIA/TIA RS250-C short haul specifications for analog video and audio transport
- Supports 32, 44.1, 48kHz AES audio
- Comprehensive signal and card status monitoring via four digit card edge display or remotely through SNMP and VistaLINK®
- Dolby E compatible
- VistaLINK® capability is available when modules are used with the 3RU 7700FR-C frame and a 7700FC VistaLINK® Frame Controller module in slot 1 of the frame
- Adjustable gain, DC offset and pre-emphasis for driving up to 250m of Belden 1694A coaxial cable
- Fully hot-swappable from front of frame with no fiber disconnect/reconnect required
- Supports single-mode and multi-mode fiber optic cable
- Input available with fiber optics or BNC (-NF version)
- Wideband optical input (1270nm-1610nm)

7707ADVR

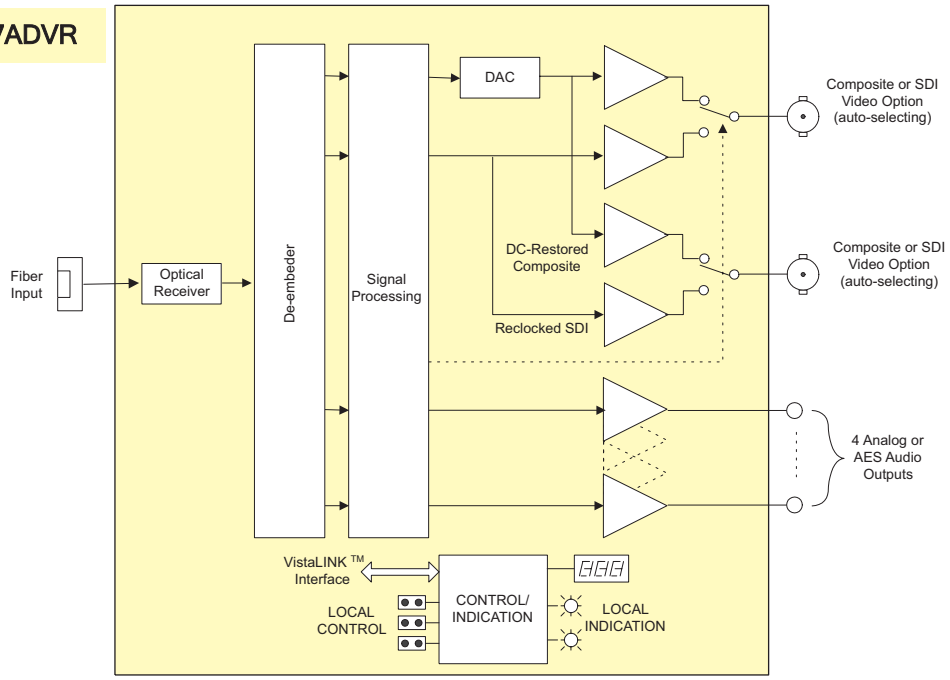

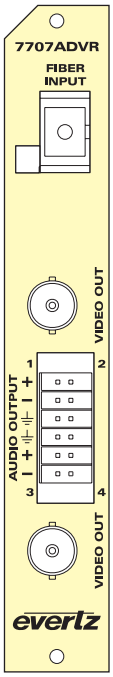

7707ADVR-NF

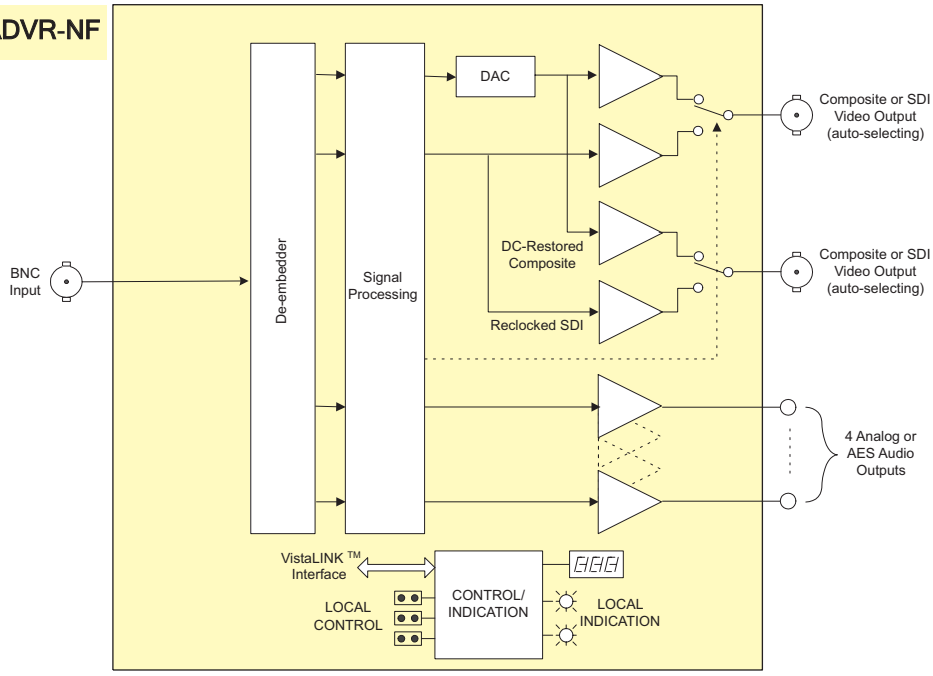

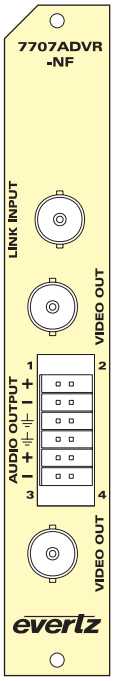

Specifications

Analog Video Outputs:

Standard:	SMPTE 170M, (NTSC), ITU-R 624-2 (PAL)
Number of Outputs:	2 BNC per IEC 60169-8 Amendment 2
System bandwidth:	> 5.5MHz
Output Level:	1V p-p (nominal), 2V p-p (maximum)
Gain:	Unity gain nominal, adjustable 50% to 150%
Output Impedance:	75Ω
Return Loss:	> 30dB to 5.5MHz
SNR:	> 70dB
Differential Gain:	< 1.0%
Differential Phase:	< 0.7°
Pre-Emphasis:	Adjustable cable loss compensation for up to 250m of Belden 1694A
Passband Ripple:	
NTSC:	< ±0.1dB to 4.1MHz and < ±0.2dB to 5.5MHz
PAL:	< ±0.1dB to 4.8MHz and < ±0.2dB to 5.8MHz
Chroma/Luma Gain:	98%-103%
Chroma/Luma Delay:	
NTSC:	< 5ns
PAL:	< 12ns
Line Time Distortion:	1.2%

Serial Video Output:

Number of Outputs:	2 regenerated
Standard:	SMPTE 259M-C (525 or 625 line components) SMPTE 305M (SDTi), DVB-ASI (without separate audio)
Connector:	BNC per IEC 60169-8 Amendment 2
Equalization:	Automatic to 300m with Belden 1694A (or equivalent)
Signal Level:	800mV nominal
DC Offset:	0V ±0.5V
Rise and Fall Time:	900ps nominal
Overshoot:	< 10% of amplitude
Return Loss:	> 15dB at 270Mb/s
Wide Band Jitter:	< 0.2 UI

Analog Audio Outputs:

Number of Outputs:	4
Type:	Balanced analog audio
Connector:	12-pin removable terminal block
Output impedance:	66Ω
Freq. Response:	±0.1dB, 20Hz to 20kHz
THD 20Hz-20kHz:	< 0.005%
Channel Phase Diff.:	±1°
SNR (weighted):	> 85dB
Output Level Adj:	-20dB to +3dB
Max Output Level:	+24dBu into 10kΩ loads

AES Audio Outputs:

Number of Outputs:	4 regenerated (selectable for balanced or unbalanced)
Standard:	
Unbalanced AES:	SMPTE 276M
Balanced AES:	AES3-1992
Other:	Dolby E compatible
Connector:	12-pin removable terminal block
Input Return Loss:	>15dB (1MHz to 6MHz)
Signal Level:	
Unbalanced:	1V p-p ±0.1V p-p
Balanced:	2V p-p ±0.1V p-p
Resolution:	Up to 24-bits
Sampling Rate:	32, 44.1, 48kHz
Output Jitter:	< 0.1 UI
Impedance:	
Unbalanced:	75Ω
Balanced:	110Ω

Optical Input:

Number of Inputs:	1
Connector:	Female SC/PC, ST/PC, FC/PC
Operating Wavelength:	1270nm to 1610nm
Max. Input Power:	0dBm
Optical Sensitivity:	-32dBm

Electrical:

Voltage:	+12V DC
Power:	12W
EMI/RFI:	Complies with FCC Part 15, Class A EU EMC Directive

Physical:

Number of slots:	1

Ordering Information

7707ADVR	Analog or SDI video with 4-channel analog or AES audio fiber optic receiver
7707ADVR-NF	Analog or SDI video with 4-channel analog or AES electrical input only receiver

Ordering Options	Rear Plate and Fiber Connector must be specified at time of order Eg: Model +SC +3RU
Rear Plate Suffix	
+3RU	3RU Rear Plate for use with 7700FR-C Multiframe
+1RU	1RU Rear Plate for use with 7701FR Multiframe
+SA	Standalone Enclosure Rear Plate
Connector Suffix	
+SC	SC/PC
+ST	ST/PC
+FC	FC/PC
Enclosures	
7700FR-C	3RU Multiframe which holds up to 15 single slot modules
7701FR	1RU Multiframe which holds up to 3 single or dual slot modules
S7701FR	Standalone Enclosure

7707CVDTA-A4

Analog Video, 4-Channel Audio and RS232 / 422 Fiber Transmitter

The 7707CVDTA-A4 is a VistaLINK® - capable composite analog video, 4-channel audio and bi-directional RS232/422 fiber optic transmitter for broadcast quality video signals.

The 7707CVDTA-A4 is backwards compatible with previous 7707CVDT-A4 versions.

The 7707CVDTA-A4 is ideal for analog VTR link extension or camera PTZ applications.

The 7707CVDTA-A4 occupies one card slot and can be housed in a 1RU frame which holds up to 3 modules, a 3RU frame which holds up to 15 modules or a standalone enclosure which holds one module.

Features & Benefits

- Single card fiber optic transmitter for analog video, four analog audio and bi-directional RS232/422
- Supports both NTSC and PAL video signals
- Broadcast quality analog video and audio performance
- 2 bi-directional RS232 or 1 bi-directional RS422
- Superior digital data transmission
- Signal transport over fiber uninterrupted by loss of input video, audio or data feeds
- Adjustable gain equalization for up to 300m of Belden 1694A coaxial cable
- Comprehensive signal and card status monitoring via four digit card edge display or remotely through SNMP and VistaLINK®
- VistaLINK® capability is available when modules are used with the 3RU 7700FR-C frame and a 7700FC VistaLINK® Frame Controller module in slot 1 of the frame
- Fully hot-swappable from front of frame with no fiber disconnect/reconnect required
- Optical output wavelengths of 1310nm, 1550nm and up to sixteen CWDM wavelengths (ITU-T G.694.2 compliant)
- DWDM wavelengths (ITU-T G.694.1 compliant) also available

7707CVDTA-A4 Application Configurations

FIBER TYPE	FIBERS	OPTICAL/ LINK BUDGET	TRANSMIT SIDE		RECEIVE SIDE		DESCRIPTION
			ORDERING PRODUCT INFO	TX POWER	ORDERING PRODUCT INFO	RX SENSITIVITY	
Multi-Mode	2	< 1km	7707CVDTA13-A4-F2	-7dBm	7707CVDRA13-A4-F2	-28dBm	1310nm on Tx & Rx fibers
Single-Mode	2	21dB/60km	7707CVDTA13-A4-F2	-7dBm	7707CVDRA13-A4-F2	-28dBm	1310nm on Tx & Rx fibers
Single-Mode	1 (WDM)	25dB/70km	7707CVDTA15-A4-W	-1dBm	7707CVDRA13M-A4-W	-26dBm	1310nm/1550nm, WDM, bi-directional on one fiber
Single-Mode	1 (CWDM)	24dB/95km**	7707CVDTAxx-A4-F2	0dBm	7707CVDRAxx-A4-F2	-28dBm	Different CWDM wavelengths on Tx & Rx, with 8 channel CWDM Mux/Demux**
Single-Mode	1 (DWDM)	30dB/120km***	7707CVDTADxxx -A4-F2	+7dBm	7707CVDRADxxx-A4-F2	-28dBm	Different DWDM wavelengths on Tx & Rx, with 8 channel DWDMux/Demux***

**Assumes 8 Ch CWDM Mux/Demux loss of 3.5dB
***Assumes 8 Ch DWDM Mux/Demux loss of 5dB

Tx Power/Rx Sensitivity are nominal values ±1dBm
Fiber loss= 0.35/0.25dB per km @ 1310nm/1550nm

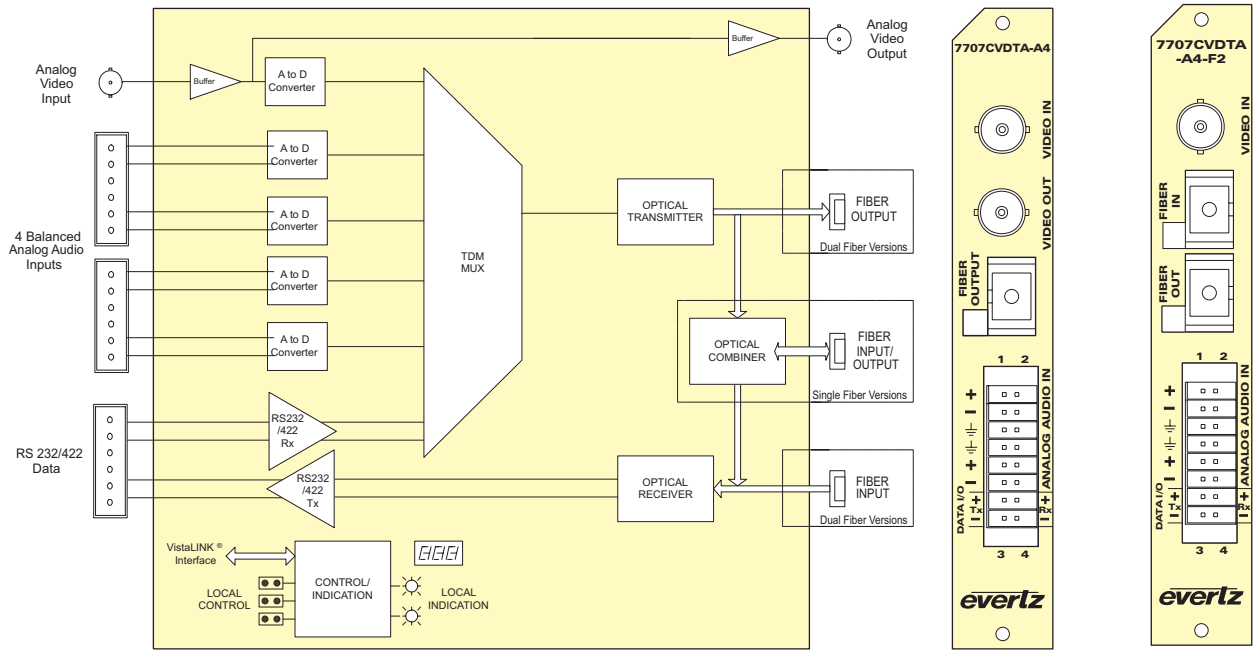

Specifications

Analog Video Input:

Standards:	NTSC, SMPTE 170M, PAL, ITU-R 624-4
Number of Inputs:	1
Connector:	BNC per IEC 60169-8 Amendment 2
Signal Quantization:	12 bits
System Bandwidth:	5.5MHz
Input Level:	2V p-p (Maximum)
Gain Equalization:	Up to 300m of Belden 1694A or equivalent (adjustable)
Input impedance:	75Ω
Return Loss:	> 30dB to 5.5MHz

Analog Video Outputs (Not available on -F2 versions):

Standard:	NTSC, SMPTE 170M, PAL, ITU-R 624-4
Number of Outputs:	1 buffered version of input
Connector:	BNC per IEC 60169-8 Amendment 2
Output Level:	1V p-p
Output Impedance:	75Ω
Return Loss:	> 30dB to 5.5MHz

Analog Audio Inputs:

Number of Inputs:	4
Type:	Balanced analog audio
Connector:	12-pin removable terminal block
Input impedance:	High Impedance (> 20kΩ)
Max. Audio Input Level:	+24dBu
Signal Quantization:	24 Bits
Freq. Response:	±0.1dB, 20Hz to 20kHz

Serial Data Ports:

Number of Ports:	1 RS422 or 2 RS232 - Jumper Selectable
Connector:	4 pins (plus ground) on 16-pin removable terminal block
Baud Rate:	Up to 3Mb/s (Determined by incoming data)

Optical Input:

Number of Inputs:	1
Connector:	Female SC/PC, ST/PC, FC/PC
Operating Wavelength:	1270nm to 1610nm
Max. Input Power:	0dBm
Optical Sensitivity:	See Application Configuration Chart

Optical Output:

Number of Outputs:	1
Connector:	Female SC/PC, ST/PC or FC/PC
Return Loss:	> 14dB
Rise and Fall Time:	200ps nominal
Fiber Size:	9µm core/125µm overall
Wavelength:	See Ordering Information
Output Power:	See Application Configuration Chart

System Performance (7707CVDTA-A4 + 7707CVDRA-A4):

Video Input to Video Output Delay:	< 10ms
Audio Input to Audio Output Delay:	< 1.9ms

Electrical:

Voltage:	+12V DC
Power:	12W (Non-DWDM), 15W (DWDM)

Physical:

Number of slots:	1

Compliance:

Electrical Safety:	CSA Listed to UL 60065-03, IEC 60065 Complies with CE Low voltage Directive
Laser Safety:	Class 1 laser product Complies with 24 CFR 1040.10 and 1040.11 IEC 60825-1
EMI/RFI:	Complies with FCC Part 15, Class A EU EMC directive

Ordering Information

7707CVDTA13-A4-F2 Analog Video + Audio + Bi-di RS-232/422 Fiber Transmitter, dual fiber, 1310nm TX & RX

7707CVDTA15-W-A4 Analog Video + Audio + Bi-di RS-232/422 Fiber Transmitter, single fiber, 1550nm TX, RX on 1310nm

For CWDM, please refer to end of fiber section for ordering information

7707CVDTAxx-A4-F2
Analog Video + Audio + Bi-di RS-232/422 Fiber Transmitter, dual fiber, CWDM Laser

For DWDM, please refer to end of fiber section for ordering information

7707CVDTADxxx-A4-F2
Analog Video + Audio + Bi-di RS-232/422 Fiber Transmitter, dual fiber, DWDM Laser

Ordering Options Rear Plate and Fiber Connector must be specified at time of order
Eg: Model +SC +3RU

Rear Plate Suffix

+3RU	3RU Rear Plate for use with 7700FR-C Multiframe
+1RU	1RU Rear Plate for use with 7701FR Multiframe
+SA	Standalone Enclosure Rear Plate

Connector Suffix

+SC	SC/PC
+ST	ST/PC
+FC	FC/PC

Enclosures

7700FR-C	3RU Multiframe which holds up to 15 single slot modules
7701FR	1RU Multiframe which holds up to 3 single or dual slot modules
S7701FR	Standalone Enclosure

7707CVDRA-A4

Analog Video, 4-Channel Audio and RS232 / 422 Fiber Receiver

The 7707CVDRA-A4 is a VistaLINK® - capable composite analog video, 4-channel audio and bi-directional RS232/422 fiber optic receiver for broadcast quality video signals.

The 7707CVDRA-A4 is backwards compatible with previous 7707CVR-A4 versions.

The 7707CVDRA-A4 is ideal for analog VTR link extension or camera PTZ applications.

The 7707CVDRA-A4 occupies one card slot and can be housed in a 1RU frame which holds up to 3 modules, a 3RU frame which holds up to 15 modules or a standalone enclosure which holds one module.

Features & Benefits

- Single card fiber optic receiver for analog video, four analog audio and bi-directional RS232/422 signals
- Supports both NTSC and PAL video signals
- Broadcast quality analog video and audio performance
- 2 bi-directional RS232 or 1 bi-directional RS422
- Superior digital data transmission
- Signal transport over fiber uninterrupted by loss of input video, audio or data feeds
- Adjustable gain, DC offset, and pre-emphasis for up to 300m of Belden 1694A coaxial cable
- Fully hot-swappable from front of frame with no fiber disconnect/reconnect required
- Comprehensive signal and card status monitoring via four digit card edge display or remotely through SNMP and VistaLINK®
- VistaLINK® capability is available when modules are used with the 3RU 7700FR-C frame and a 7700FC VistaLINK® Frame Controller module in slot 1 of the frame
- Optical output wavelengths of 1310nm, 1550nm and up to sixteen CWDM wavelengths (ITU-T G.694.2 compliant)
- DWDM wavelengths (ITU-T G.694.1 compliant) also available

7707CVDRA-A4 Application Configurations

FIBER TYPE	FIBERS	OPTICAL/LINK BUDGET	TRANSMIT SIDE		RECEIVE SIDE		DESCRIPTION
			ORDERING PRODUCT INFO	TX POWER	ORDERING PRODUCT INFO	RX SENSITIVITY	
Multi-Mode	2	< 1km	7707CVDTA13-A4-F2	-7dBm	7707CVDRA13-A4-F2	-28dBm	1310nm on Tx & Rx fibers
Single-Mode	2	21dB/60km	7707CVDTA13-A4-F2	-7dBm	7707CVDRA13-A4-F2	-28dBm	1310nm on Tx & Rx fibers
Single-Mode	1 (WDM)	25dB/70km	7707CVDTA15-A4-W	-1dBm	7707CVDRA13M-A4-W	-26dBm	1310nm/1550nm, WDM, bi-directional on one fiber
Single-Mode	1 (CWDM)	24dB/95km**	7707CVDTAxx-A4-F2	0dBm	7707CVDRAxx-A4-F2	-28dBm	Different CWDM wavelengths on Tx & Rx, with 8 channel CWDM Mux/Demux**
Single-Mode	1 (DWDM)	30dB/120km***	7707CVDTADxxx-A4-F2	+7dBm	7707CVDRADxxx-A4-F2	-28dBm	Different DWDM wavelengths on Tx & Rx, with 8 channel DWDM Mux/Demux**

**Assumes 8 Ch CWDM Mux/Demux loss of 3.5dB
***Assumes 8 Ch DWDM Mux/Demux loss of 5dB

Tx Power/Rx Sensitivity are nominal values ±1dBm
Fiber loss= 0.35/0.25dB per km @ 1310nm/1550nm

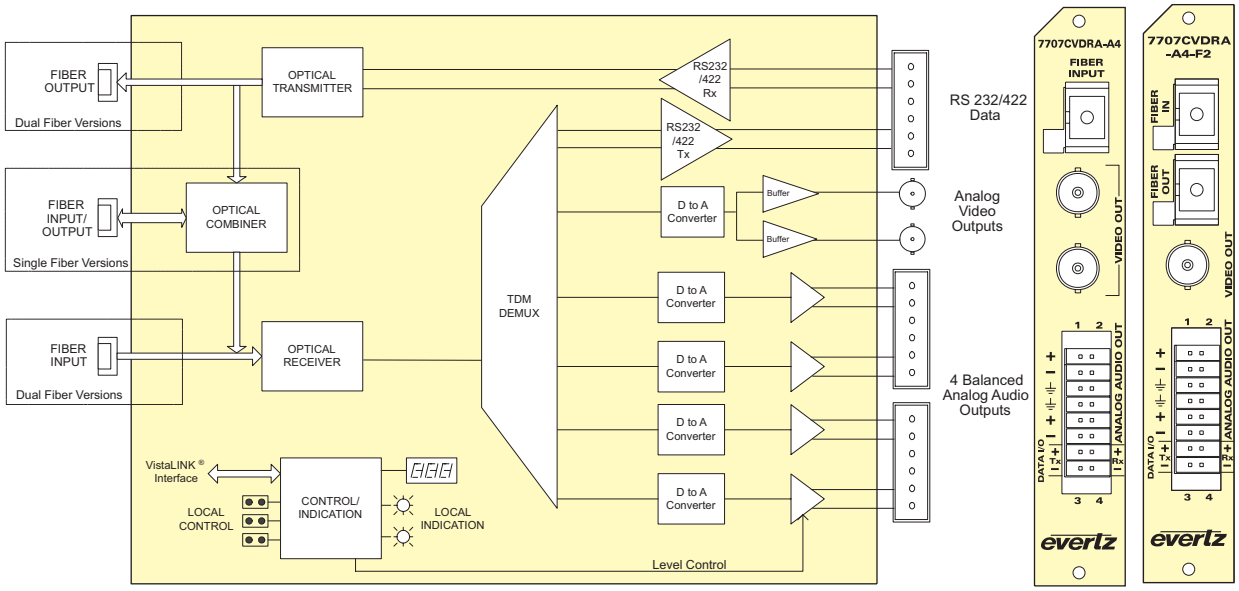

Specifications

Optical Input:
Number of Inputs: 1
Connector: Female SC/PC, ST/PC, FC/PC
Operating Wavelength: 1270nm to 1610nm
Max. Input Power: 0dBm
Optical Sensitivity: See Application Configuration Chart

Optical Output:
Number of Outputs: 1
Connector: Female SC/PC, ST/PC or FC/PC
Return Loss: > 14dB
Rise and Fall Time: 200ps nominal
Fiber Size: 9µm core/125µm overall
Wavelength: See Ordering Information
Output Power: See Application Configuration Chart

Analog Video Outputs:
Standard: NTSC, SMPTE 170M, PAL, ITU-R624-4
Connector: BNC per IEC 60169-8 Amendment 2
Signal Resolution: 12 bits
System bandwidth: 5.5MHz
Output Level: 1V p-p (nominal), 2V p-p maximum
Gain: Unity gain nominal, adjustable 50% to 150%
Output Impedance: 75Ω
Return Loss: > 20dB
Signal/Noise: > 67dB
Differential Gain: < 1.0%
Differential Phase: < 1.0°
Passband Ripple: < ±0.1dB to 4.7MHz (Equalization set to 0 m)
< ±0.2dB to 4.7MHz (Equalization set to maximum)
Pre-Emphasis: Cable loss compensation for up to 300m of Belden 1694A (each output adjustable separately)
Chroma/Luma Delay: < 11ns
Line time distortion: < 1% (0.5% typical)

Analog Audio Outputs:
Number of Outputs: 4
Type: Balanced analog audio
Connector: 12-pin removable terminal block
Output impedance: 66Ω
Freq. Response: ±0.1dB, 20Hz to 20kHz
THD 20Hz-20kHz: < 0.005%
Channel Phase Diff.: ±1°
SNR (weighted): > 85dB
Output Level Adj: -20dB to +3dB
Max Output Level: +24dBu into 10kΩ loads

Serial Data Ports:
Number of Ports: 1 RS422 or 2 RS232 - Jumper Selectable
Connector: 4 pins (plus ground) on 16-pin removable terminal block
Baud Rate: Up to 3Mb/s (Determined by incoming data)

System Performance (7707CVDTA-A4 + 7707CVDRA-A4):
Video Input to Video Output Delay:
< 10ms
Audio Input to Audio Output Delay:
< 1.9ms

Electrical:
Voltage: +12V DC
Power: 12W (Non DWDM), 15W (DWDM)

Physical:
Number of slots: 1

Compliance:
Electrical Safety: CSA Listed to UL 60065-03, IEC 60065
Complies with CE Low voltage Directive
Laser Safety: Class 1 laser product
Complies with 24 CFR 1040.10 and 1040.11
IEC 60825-1
EMI/RFI: Complies with FCC Part 15, Class A
EU EMC directive

Ordering Information

7707CVDRA13-A4-F2
Analog Video + Audio + Bi-di RS-232/422 Fiber Receiver, dual fiber, 1310nm TX & RX

7707CVDRA13M-W-A4
Analog Video + Audio + Bi-di RS-232/422 Fiber Receiver, single fiber, 1310nm TX @ 0dBm, RX on 1550nm

For CWDM, please refer to the end of the fiber section for ordering information

7707CVDRAxx-A4-F2
Analog Video + Audio + Bi-di RS-232/422 Fiber Receiver, dual fiber, CWDM Laser

For DWDM, please refer to the end of the fiber section for ordering information

7707CVDRADxxx-A4-F2
Analog Video + Audio + Bi-di RS-232/422 Fiber Receiver, dual fiber, DWDM Laser

Ordering Options Rear Plate and Fiber Connector must be specified at time of order
Eg: Model +SC +3RU

Rear Plate Suffix
+3RU 3RU Rear Plate for use with 7700FR-C Multiframe
+1RU 1RU Rear Plate for use with 7701FR Multiframe
+SA Standalone Enclosure Rear Plate

Connector Suffix
+SC SC/PC
+ST ST/PC
+FC FC/PC

Enclosures
7700FR-C 3RU Multiframe which holds up to 15 single slot modules
7701FR 1RU Multiframe which holds up to 3 single or dual slot modules
S7701FR Standalone Enclosure

7707CVTA, 7707CVTA-2

Single / Dual Analog Video with 4-Channel Analog Audio Fiber Transmitter

The 7707CVTA is a VistaLINK® capable, composite analog video and analog audio fiber transmitter for broadcast quality video and audio signals. This single card module accepts one NTSC or PAL analog video input with up to four analog audio inputs, performs analog to digital conversion and transmits them over a single fiber. The companion 7707CVRA Composite Video and Analog Audio Fiber Receiver demultiplexes the signals and converts them back to analog form.

The 7707CVTA-2 Dual Composite Video and Analog Audio fiber transmitter is a dual channel version that digitizes and multiplexes two analog video and up to four analog audio signals and converts them to an optical signal for transmission.

The companion 7707CVRA-2 Dual Composite Video and Analog Audio Fiber Receiver accepts a fiber optic input, demultiplexes the signals, performs D to A conversion and outputs two NTSC or PAL analog video signals and up to four balanced analog audio signals.

The fiber optic output of the 7707CVTA and 7707CVTA-2 is available in an assortment of optical wavelengths, accommodating 1310nm/1550nm, CWDM and DWDM transmission schemes. The 7707CVTA and 7707CVTA-2 occupy one card slot and can be housed in a 1RU frame, which will hold up to three modules, a 3RU frame which will hold up to 15 modules or a standalone enclosure that will hold 1 module.

Features & Benefits

- Single card fiber optic transmitter for one or two analog video and four analog audio signals
- Supports both NTSC and PAL video signals
- Broadcast quality analog video and audio performance
- Meets or exceeds EIA/TIA RS250-C short haul specifications for analog video and audio transport
- Superior digital data transmission
- Video loop-through for additional signal distribution or monitoring (7707CVTA only)
- Signal transport over fiber is uninterrupted by loss of input video or audio feeds
- Low Audio to Video latency
- Comprehensive signal and card status monitoring via four digit card edge display or remotely through SNMP and VistaLINK®
- VistaLINK® capability is available when modules are used with the 3RU 7700FR-C frame and a 7700FC VistaLINK® Frame Controller module in slot 1 of the frame
- Adjustable gain equalization for up to 250m of Belden 1694A coaxial cable
- Fully hot-swappable from front of frame with no fiber disconnect/reconnect required
- Supports single-mode and multi-mode fiber optic cable
- Optical output wavelengths of 1310nm, 1550nm, and up to sixteen CWDM wavelengths (ITU-T G.694.2 compliant)
- DWDM wavelengths (ITU-T G.694.1 compliant) also available

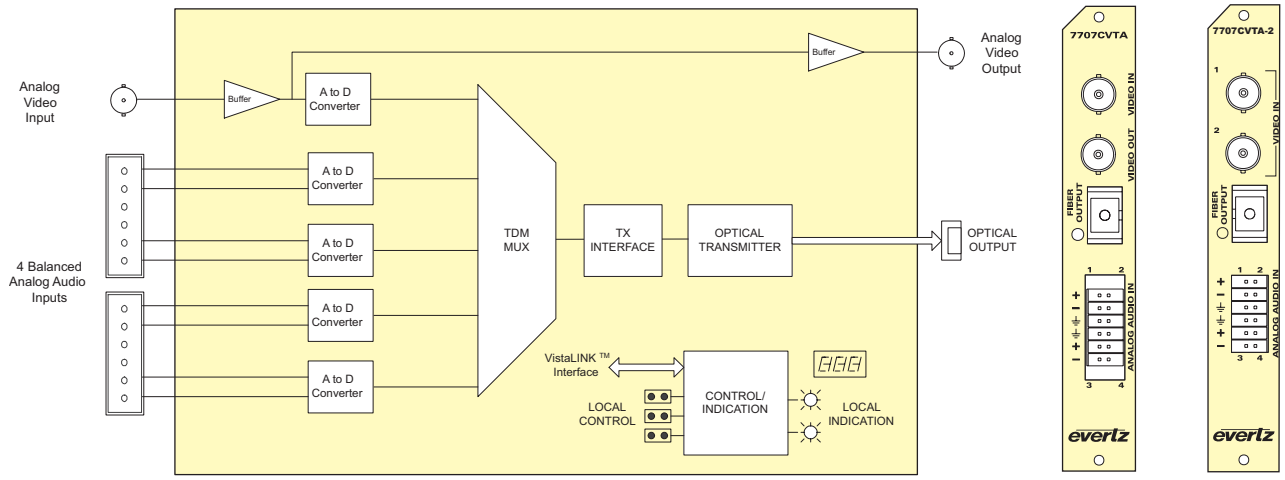

Specifications

Analog Video Input:

Standards:	NTSC, SMPTE 170M, PAL, ITU-R 624-4
Number of Inputs:	1 on 7707CVTA, 2 on 7707CVTA-2
Connector:	BNC per IEC 60169-8 Amendment 2
Signal Quantization:	12 bits
System Bandwidth:	5.5MHz
Input Level:	2V p-p (Maximum)
Gain Equalization:	up to 250m of Belden 1694A or equivalent (adjustable)
Input impedance:	75Ω
Return Loss:	> 30dB to 5.5MHz
Signal/Noise Ratio:	> 70dB
Differential Gain:	< 1.0%
Differential Phase:	< 0.7°
Passband Ripple:	
NTSC:	< ±0.1dB to 4.1MHz
	< ±0.2dB to 5.5MHz
PAL:	< ±0.1dB to 4.8MHz
	< ±0.2dB to 5.8MHz
Chroma/Luma Gain:	98% to 103%
Chroma/Luma Delay:	
NTSC:	< 5ns
PAL:	< 12ns
Line Time Distortion:	1.2%

Analog Video Outputs (7707CVTA only):

Standard:	NTSC, SMPTE 170M, PAL, ITU-R 624-4
Number of Outputs:	1 buffered version of input
Connector:	BNC per IEC 60169-8 Amendment 2
Output Level:	1V p-p
Output Impedance:	75Ω
Return Loss:	> 30dB to 5.5MHz

Analog Audio Inputs:

Number of Inputs:	4
Type:	Balanced analog audio
Connector:	12-pin removable terminal block
Input impedance:	High Impedance (> 20kΩ)
Freq. Response:	±0.1dB, 20Hz to 20kHz
THD 20Hz-20kHz:	< 0.005%
Channel Phase Diff.:	±1°
SNR (weighted):	> 85dB
Max. Audio Input Level:	+24dBu
Signal Quantization:	24 Bits

Optical Outputs:

Number of Outputs:	1
Connector:	Female SC/PC, SC/PC, ST/PC or FC/PC
Return Loss:	> 14dB
Wavelengths:	
Standard:	1310nm, 1550nm (nominal)
CWDM:	See Ordering Information
DWDM:	See Ordering Information
Output Power:	
1310nm FP (Standard):	-7dBm ±1dBm
1310nm FP (M version):	0dBm ±1dBm
1550 & CWDM DFB:	0dBm ±1dBm
DWDM:	+7dBm ±1dBm

System Performance (7707CVTA + 7707VCRA or 7707CVTA-2 + 7707CVRA-2):

Video Input to Output Delay:	< 10ms
Audio Input to Output Delay:	< 1.9ms

Electrical:

Voltage:	+12V DC
Power:	11/12W (Non-DWDM), 13/14W (DWDM)

Physical:

7700 or 7701 frame mounting:	
Number of slots:	1

Compliance:

Electrical Safety:	CSA Listed to UL 60065-03, IEC 60065 Complies with CE Low voltage Directive
Laser Safety:	Class 1 laser product Complies with 24 CFR 1040.10 and 1040.11 IEC 60825-1
EMI/RFI:	Complies with FCC Part 15, Class A EU EMC directive

Ordering Information

7707CVTA13	Analog Video with 4-channel Analog Audio Fiber Transmitter 1310nm FP Laser, VistaLINK®
7707CVTA13M	Analog Video with 4-channel Analog Audio Fiber Transmitter 1310nm FP Laser (0dBm launch), VistaLINK®
7707CVTA13-2	Dual Analog Video with 4-channel Analog Audio Fiber Transmitter, 1310nm FP Laser, VistaLINK®
7707CVTA13M-2	Dual Analog Video with 4-channel Analog Audio Fiber Transmitter, 1310nm FP Laser, (0dBm launch), VistaLINK®
7707CVTA15	Analog Video with 4-channel Analog Audio Fiber Transmitter 1550nm DFB Laser, VistaLINK®
7707CVTA15-2	Dual Analog Video with 4-channel Analog Audio Fiber Transmitter, 1550nm DFB Laser, VistaLINK®

For CWDM, please refer to the end of the fiber section for ordering information

7707CVTAxx	Analog Video with 4-channel Analog Audio Fiber Transmitter CWDM DFB Laser, VistaLINK®
7707CVTAxx-2	Dual Analog Video with 4-channel Analog Audio Fiber Transmitter CWDM DFB Laser, VistaLINK®

For DWDM, please refer to the end of the fiber section for ordering information

7707CVTADxxx	Analog Video with 4-channel Analog Audio Fiber Transmitter DWDM DFB Laser, VistaLINK®
7707CVTADxxx-2	Dual Analog Video with 4-channel Analog Audio Fiber Transmitter DWDM DFB Laser, VistaLINK®

Ordering Options Rear Plate and Fiber Connector must be specified at time of order
Eg: Model +SC +3RU

Rear Plate Suffix

+3RU	3RU Rear Plate for use with 7700FR-C Multiframe
+1RU	1RU Rear Plate for use with 7701FR Multiframe
+SA	Standalone Enclosure Rear Plate

Connector Suffix

+SC	SC/PC
+ST	ST/PC
+FC	FC/PC

Enclosures

7700FR-C	3RU Multiframe which holds up to 15 single slot modules
7701FR	1RU Multiframe which holds up to 3 single or dual slot modules
S7701FR	Standalone Enclosure

7707CVT-4, 7707CVT-4-A16

Quad Analog Video, 16 Channel Analog Audio Fiber Transmitter

The 7707CVT-4 and 7707CVT-4-A16 are VistaLINK® -capable, composite analog video fiber transmitters for broadcast quality analog video and 16 analog audio signals. These card modules accept up to 4 NTSC or PAL analog video inputs and 16 analog audio, performs analog to digital conversion and transmits them over a single fiber. The companion 7707CVR-4 and 7707CVR-4-A16 Fiber Receiver demultiplexes the signals and converts them back to analog form.

The fiber optic output of these modules are available in an assortment of optical wavelengths, accommodating 1310nm, 1550nm, CWDM and DWDM transmission schemes.

The 77707CVT-4 occupies a single slot where as the 707CVT-4-A16 occupies two card slots and can be housed in a 1RU frame which will hold up to 3 modules, a 3RU frame which will hold up to 7 modules or a standalone enclosure that will hold 1 module.

Features & Benefits

- Single card fiber optic transmitter for up to four analog video and 16 analog audio signals
- Supports both NTSC and PAL video signals
- Broadcast quality analog video and audio performance
- Meets or exceeds EIA/TIA RS250-C short haul specifications for analog video transport
- Signal transport over fiber is uninterrupted by loss of input video feeds
- Comprehensive signal and card status monitoring via four digit card edge display or remotely through SNMP and VistaLINK®
- Supports single-mode and multi-mode fiber optic cable
- VistaLINK® capability is available when modules are used with the 3RU 7700FR-C frame and a 7700FC VistaLINK® Frame Controller module in slot 1 of the frame
- Adjustable equalization for up to 250m of Belden 1694A coaxial cable
- Fully hot-swappable from front of frame with no fiber disconnect/reconnect required
- Optical output wavelengths of 1310nm, 1550nm, and up to sixteen CWDM wavelengths (ITU-T G.694.2 compliant)
- DWDM wavelengths (ITU-T G.694.1 compliant) also available

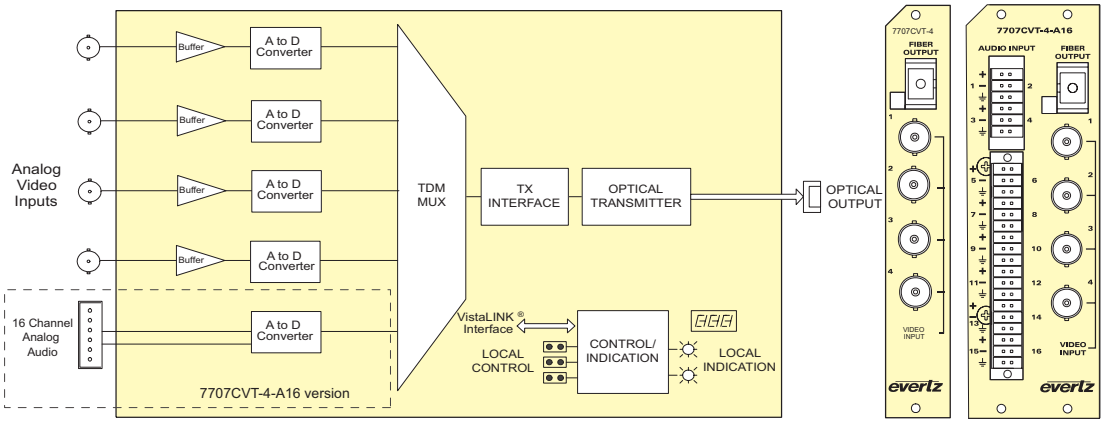

Specifications

Analog Video Input:

Standards:	NTSC, SMPTE 170M, PAL, ITU-R 624-4
Number of Inputs:	4
Connector:	BNC per IEC 60169-8 Amendment 2
Signal Quantization:	12 bits
System Bandwidth:	5.5MHz
Input Level:	2V p-p (maximum)
Gain Equalization:	up to 250m of Belden 1694A or equivalent (adjustable)
Input impedance:	75Ω
Return Loss:	> 30dB to 5.5MHz
Signal/Noise Ratio:	> 70dB
Differential Gain:	< 1.0%
Differential Phase:	< 0.7°
Passband Ripple:	
NTSC:	< ±0.1dB to 4.1MHz
	< ±0.2dB to 5.5MHz
PAL:	< ±0.1dB to 4.8MHz
	< ±0.2dB to 5.8MHz
Chroma/Luma Gain:	98% to 103%
Chroma/Luma Delay:	
NTSC:	< 5ns
PAL:	< 12ns
Line Time Distortion:	1.2%

Analog Audio Inputs (7707CVT-4-A16):

Number of Inputs:	16
Type:	Balanced analog audio
Connector:	48-pin removable terminal block
Input impedance:	High Impedance (> 20kΩ)
Freq. Response:	±0.1dB, 20Hz to 20kHz
THD 20Hz-20kHz:	< 0.005%
Channel Phase Diff.:	±1°
SNR (weighted):	> 85dB
Max. Audio Input Level:	
	+24dBu
Signal Quantization:	24 Bits

Optical Outputs:

Number of Outputs:	1
Connector:	Female SC/PC, SC/PC, ST/PC or FC/PC
Return Loss:	> 14dB
Wavelengths:	
Standard:	1310nm, 1550nm (nominal)
CWDM:	See Ordering Information
DWDM:	See Ordering Information
Output Power:	
1310nm FP (Standard):	-7dBm ±1dBm
1550 & CWDM DFB:	0dBm ±1dBm
DWDM DFB:	+7dBm ±1dBm

Electrical:

Voltage:	+12V DC
Power:	11/12W (Non-DWDM)
	13/14W (DWDM)

Physical:

Number of slots:	1

Compliance:

Electrical Safety:	CSA Listed to UL 60065-03, IEC 60065 Complies with CE Low voltage Directive
Laser Safety:	Class 1 laser product Complies with 24 CFR 1040.10 and 1040.11 IEC 60825-1
EMI/RFI:	Complies with FCC Part 15, Class A EU EMC directive

Ordering Information

7707CVT13-4	Quad Analog Video Fiber Transmitter 1310nm FP Laser, VistaLINK®
7707CVT15-4	Quad Analog Video, Fiber Transmitter 1550nm DFB Laser, VistaLINK®
7707CVT13-4-A16	Quad Analog Video, 16 Analog, Audio Fiber Transmitter 1310nm FP Laser, VistaLINK®
7707CVT15-4-A16	Quad Analog Video, 16 Analog, Audio Fiber Transmitter 1550nm DFB Laser, VistaLINK®

For CWDM, please refer to the end of the fiber section for ordering information

7707CVTxx-4	Quad Analog Video Fiber Transmitter CWDM DFB Laser, VistaLINK®
7707CVTxx-4-A16	Quad Analog Video, 16 Analog, Audio Fiber Transmitter CWDM DFB Laser, VistaLINK®

For DWDM, please refer to the end of the fiber section for ordering information

7707CVTDxxx-4	Quad Analog Video Fiber Transmitter DWDM DFB Laser, VistaLINK®
7707CVTDxxx-4-A16	Quad Analog Video, 16 Analog, Audio Fiber Transmitter DWDM DFB Laser, VistaLINK®

Ordering Options	Rear Plate and Fiber Connector must be specified at time of order Eg: Model +SC +3RU
Rear Plate Suffix	
+3RU	3RU Rear Plate for use with 7700FR-C Multiframe
+1RU	1RU Rear Plate for use with 7701FR Multiframe
+SA	Standalone Enclosure Rear Plate
Connector Suffix	
+SC	SC/PC
+ST	ST/PC
+FC	FC/PC
Enclosures	
7700FR-C	3RU Multiframe which holds up to 15 single slot modules
7701FR	1RU Multiframe which holds up to 3 single or dual slot modules
S7701FR	Standalone Enclosure

This page is intentionally left blank

7707CVTA-TRI, 7707CVTA-2-TRI

Tri-Level Sync and Analog Audio Fiber Transmitter

The 7707CVTA-TRI is a VistaLINK® capable, tri level sync and analog audio fiber transmitter for broadcast quality video and audio signals. This single slot card module accepts one tri level sync analog video input with up to four analog audio inputs, performs analog-to-digital conversion and transmits them over a single fiber. The companion 7707CVRA-TRI Tri Level Sync and Analog Audio Fiber Receiver demultiplexes the signals and converts them back to analog form.

The 7707CVTA-2-TRI Dual Tri Level Sync and Analog Audio fiber transmitter is a dual channel version that digitizes and multiplexes two tri level sync and up to four analog audio signals and converts them to an optical signal for transmission.

The companion 7707CVRA-2-TRI Tri Level Sync and Analog Audio Fiber Receiver accepts a fiber optic input, demultiplexes the signals, performs D to A conversion and outputs two tri-level sync signals and up to four balanced analog audio signals.
The fiber optic output of the 7707CVTA-TRI and 7707CVTA-2-TRI is available in an assortment of optical wavelengths, accommodating 1310nm/1550nm, CWDM and DWDM transmission schemes.

The 7707CVTA-TRI and 7707CVTA-2-TRI occupy one card slot and can be housed in a 1RU frame, which will hold up to three modules, a 3RU frame which will hold up to 15 modules or a standalone enclosure that will hold 1 module.

Features & Benefits

- Single card fiber optic transmitter for one or two tri level sync and four analog audio signals
- Supports all tri level sync standards for HD video
- Superior digital data transmission
- Video loop-through for additional signal distribution or monitoring (7707CVTA-TRI only)
- Fully hot-swappable from front of frame with no fiber disconnect/reconnect required
- Comprehensive signal and card status monitoring via four digit card edge display or remotely through SNMP and VistaLINK®
- VistaLINK® capability is available when modules are used with the 3RU 7700FR-C frame and a 7700FC VistaLINK® Frame Controller module in slot 1 of the frame
- Adjustable gain equalization for up to 250m of Belden 1694A coaxial cable
- Supports single-mode and multi-mode fiber optic cable
- Optical output wavelengths of 1310nm, 1550nm, and up to sixteen CWDM wavelengths (ITU-T G.694.2 compliant)
- DWDM wavelengths (ITU-T G.694.1 compliant) also available

7707CVTA-TRI

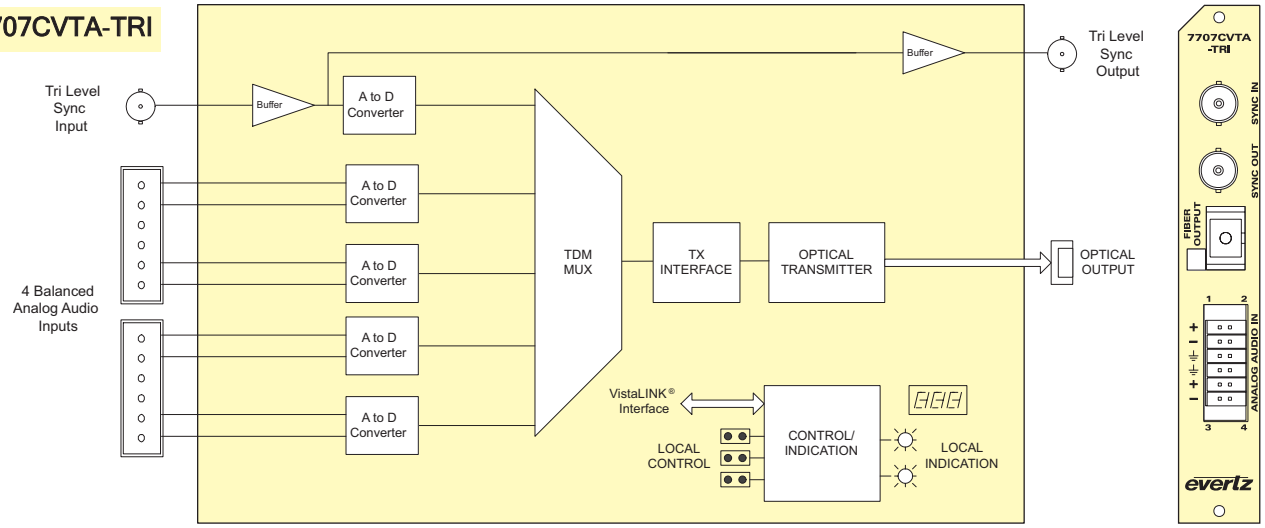

7707CVTA-2-TRI

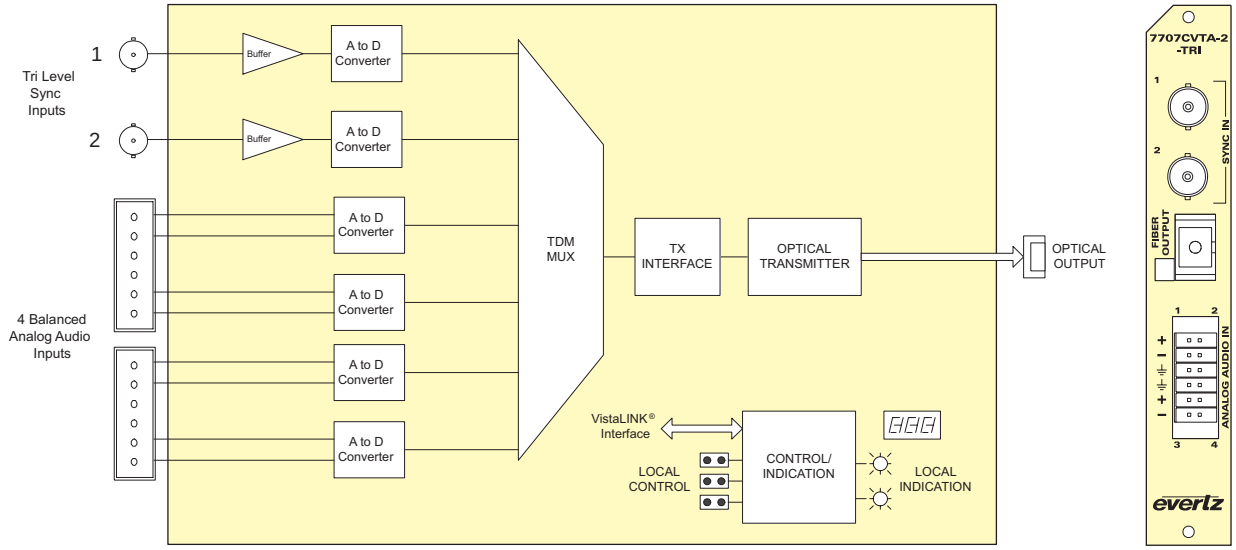

Specifications

Sync Input:

Standards:	Analog tri level sync signals defined by SMPTE 274M, SMPTE 296M NTSC or PAL analog video signals are not valid inputs to this card
Number of Inputs:	1 on 7707CVTA-TRI, 2 on 7707CVTA-2-TRI
Connector:	BNC per IEC 60169-8 Amendment 2
Signal Quantization:	12 bits
System Bandwidth:	5.5MHz
Input Level:	2V p-p (Maximum)
Gain Equalization:	up to 250m of Belden 1694A or equivalent (adjustable)
Input impedance:	75Ω
Return Loss:	> 30dB to 5.5MHz
Signal/Noise Ratio:	> 70dB

Sync Outputs (7707CVTA-TRI only):

Standard:	Analog tri level sync signals defined by SMPTE 274M and SMPTE 296M
Number of Outputs:	1 buffered version of input
Connector:	BNC per IEC 60169-8 Amendment 2
Output Level:	1V p-p
Output Impedance:	75Ω
Return Loss:	> 30dB to 5.5MHz

Analog Audio Inputs:

Number of Inputs:	4
Type:	Balanced analog audio
Connector:	12-pin removable terminal block
Input impedance:	High Impedance (>20KΩ)
Freq. Response:	±0.1dB, 20Hz to 20kHz
THD 20Hz-20kHz:	< 0.005%
Channel Phase Diff.:	±1°
SNR (weighted):	> 85dB
Max. Audio Input Level:	+24dBu
Signal Quantization:	24 Bits

Optical Outputs:

Number of Outputs:	1
Connector:	Female SC/PC, SC/PC, ST/PC or FC/PC
Return Loss:	> 14dB
Wavelengths:	
Standard:	1310nm, 1550nm (nominal)
CWDM:	See Ordering Information
DWDM:	See Ordering Information
Output Power:	
1310nm FP (Standard):	-7dBm ±1dBm
1310nm FP (M version):	0dBm ±1dBm
1550 & CWDM DFB:	0dBm ±1dBm
DWDM:	+7dBm ±1dBm

System Performance (7707CVTA-TRI + 7707VCRA-TRI or 7707CVTA-2-TRI + 7707CVRA-2-TRI):

Video Input to Output Delay:	< 10ms
Audio Input to Output Delay:	< 1.9ms

Electrical:

Voltage:	+12V DC
Power:	11/12W (Non-DWDM), 13/14W (DWDM)

Physical:

7700 or 7701 frame mounting:	
Number of slots:	1

Compliance:

Electrical Safety:	CSA Listed to UL 60065-03, IEC 60065 Complies with CE Low voltage Directive
Laser Safety:	Class 1 laser product Complies with 24 CFR 1040.10 and 1040.11 IEC 60825-1
EMI/RFI:	Complies with FCC Part 15, Class A EU EMC directive

Ordering Information

7707CVTA13-TRI	Tri Level Sync with 4-channel Analog Audio Fiber Transmitter 1310nm FP Laser, VistaLINK®
7707CVTA13-2-TRI	Dual Tri Level Sync with 4-channel Analog Audio Fiber Transmitter, 1310nm FP Laser, VistaLINK®
7707CVTA15-TRI	Tri Level Sync with 4-channel Analog Audio Fiber Transmitter 1550nm DFB Laser, VistaLINK®
7707CVTA15-2-TRI	Dual Tri Level Sync with 4-channel Analog Audio Fiber Transmitter, 1550nm DFB Laser, VistaLINK®

For CWDM, please refer to the end of the fiber section for ordering information

7707CVTAxx-TRI	Tri Level Sync with 4-channel Analog Audio Fiber Transmitter CWDM DFB Laser, VistaLINK®
7707CVTAxx-2-TRI	Dual Tri Level Sync with 4-channel Analog Audio Fiber Transmitter CWDM DFB Laser, VistaLINK®

For DWDM, please refer to the end of the fiber section for ordering information

7707CVTADxxx-TRI	Tri Level Sync with 4-channel Analog Audio Fiber Transmitter DWDM DFB Laser, VistaLINK®
7707CVTADxxx-2-TRI	Dual Tri Level Sync with 4-channel Analog Audio Fiber Transmitter DWDM DFB Laser, VistaLINK®

Ordering Options	Rear Plate and Fiber Connector must be specified at time of order Eg: Model +SC +3RU
Rear Plate Suffix	
+3RU	3RU Rear Plate for use with 7700FR-C Multiframe
+1RU	1RU Rear Plate for use with 7701FR Multiframe
+SA	Standalone Enclosure Rear Plate
Connector Suffix	
+SC	SC/PC
+SCF	SC/PC connector with flap cover
+ST	ST/PC
+FC	FC/PC
Enclosures	
7700FR-C	3RU Multiframe which holds up to 15 single slot modules
7701FR	1RU Multiframe which holds up to 3 single or dual slot modules
S7701FR	Standalone Enclosure

7707CVRA-TRI & 7707CVRA-2-TRI

Tri-Level Sync and Analog Audio Fiber Receiver

The 7707CVRA-TRI is a VistaLINK® capable, tri level sync and analog audio fiber receiver for broadcast quality video signals. This single slot card module accepts a fiber optic input from the companion 7707CVTA-TRI tri level sync and Analog Audio Fiber Transmitter, demultiplexes the signals, performs D to A conversion and outputs tri level sync and up to four balanced analog audio signals.

The 7707CVRA-2-TRI Dual Tri Level Sync and Analog Audio Fiber Receiver is a dual channel version that accepts a fiber optic input from the companion 7707CVTA-2-TRI transmitter, demultiplexes the signals, performs D to A conversion and outputs 2 tri level sync signals and up to four balanced analog audio signals.

The 7707CVRA-TRI and 7707CVRA-2-TRI occupy one card slot and can be housed in either a 1RU frame which will hold up to 3 modules, a 3RU frame which will hold up to 15 modules or a standalone enclosure which will hold 1 module.

Features & Benefits

- Single card fiber optic receiver for one or two tri level sync and four analog audio signals
- Supports all tri level sync standards for HD video
- Adjustable gain, DC offset and pre-emphasis for up to 250m of Belden 1694A coaxial cable
- Comprehensive signal and card status monitoring via four digit card edge display or remotely through SNMP and VistaLINK®
- VistaLINK® capability is available when modules are used with the 3RU 7700FR-C frame and a 7700FC VistaLINK® Frame Controller module in slot 1 of the frame
- Fully Hot-swappable from front of frame with no fiber disconnect/reconnect required
- Supports single-mode and multi-mode fiber optic cable
- Accepts any wavelength in the 1270nm to 1610nm range

7707CVRA-TRI

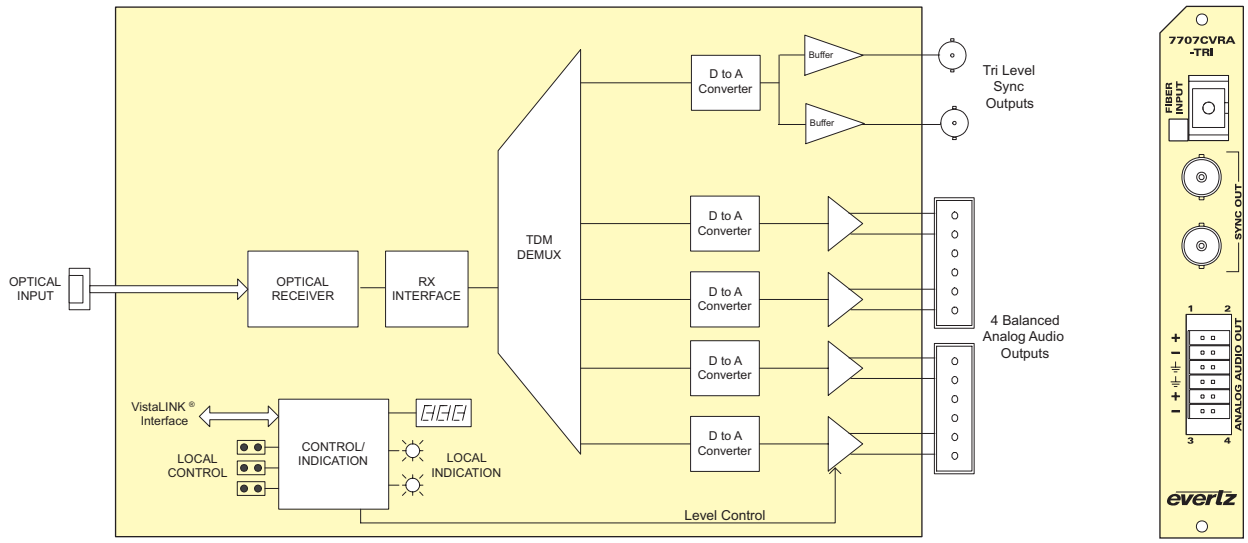

7707CVRA-2-TRI

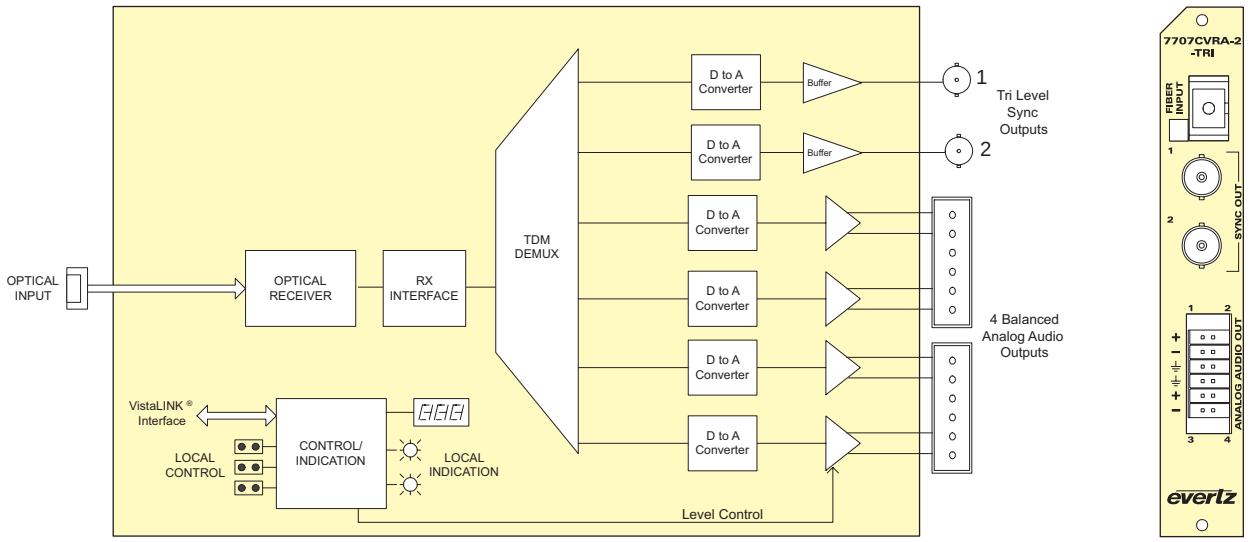

Specifications

Optical Input:

Number of Inputs:	1
Connector:	Female SC/PC, ST/PC, FC/PC
Operating Wavelength:	1270nm to 1610nm
Maximum Input Power:	0dBm
Optical Sensitivity:	-28dBm

Analog Video Outputs:

Standards:	Analog tri level sync signals defined by SMPTE 274M and SMPTE 296M
Number of Outputs:	2 on 7707CVRA-TRI 2 (1 per input channel) on 7707CVRA-2-TRI
Connector:	BNC per IEC 60169-8
Amendment 2	
System bandwidth:	5.5 MHz
Output Level:	1 Vp-p (nominal), 2 Vp-p maximum
Gain:	Unity gain nominal, adjustable 50% to 150%
Output Impedance:	75W
Return Loss:	> 20dB
SNR:	> 70dB

Analog Audio Outputs:

Number of Outputs:	4
Type:	Balanced analog audio
Connector:	12 pin removable terminal block
Output impedance:	66W
Freq. Response:	± 0.1dB, 20Hz to 20 kHz
THD 20Hz-20kHz:	< 0.005%
Channel Phase Diff.	± 1°
SNR (weighted):	> 85dB
Output Level Adj:	-20dB to +3dB
Max Output Level:	+24 dBu into 10kW loads

System Performance (7707CVTA-TRI + 7707CVRA-TRI or 7707CVTA-2-TRI + 7707CVRA-2-TRI):

Video Input to Output Delay:	<10ms
Audio Input to Output Delay:	<1.9ms

Electrical:

Voltage:	+12VDC
Power:	12 Watts
EMI/RFI:	Complies with FCC Part 15, Class A EU EMC directive

Physical:

Number of slots:	1

Ordering Information

7707CVRA-TRI	Tri Level Sync with 4-Channel Analog Audio Fiber Receiver, VistaLINK®
7707CVRA-2-TRI	Dual Tri Level Sync with 4-Channel Analog Audio Fiber Receiver, VistaLINK®

Ordering Options	Rear Plate and Fiber Connector must be specified at time of order Eg: Model +SC +3RU
Rear Plate Suffix	
+3RU	3RU Rear Plate for use with 7700FR-C Multiframe
+1RU	1RU Rear Plate for use with 7701FR Multiframe
+SA	Standalone Enclosure Rear Plate
Connector Suffix	
+SC	SC/PC
+SCF	SC/PC connector with flap cover
+ST	ST/PC
+FC	FC/PC
Enclosures	
7700FR-C	3RU Multiframe which holds up to 15 single slot modules
7701FR	1RU Multiframe which holds up to 3 single or dual slot modules
S7701FR	Standalone Enclosure

7707SVT-2

Dual S-Video Fiber Transmitter

The 7707SVT-2 is a VistaLINK® capable, S-Video fiber transmitter for broadcast quality signals. This single card module accepts two S-Video inputs, performs analog to digital conversion and transmits them over a single fiber. The companion 7707SVR-2 S-Video Fiber Receiver demultiplexes the signals and converts them back to analog form.

The fiber output of the 7707SVT-2 is available in an assortment of optical wavelengths accommodating 1310nm/1550nm, CWDM and DWDM transmission schemes.

The 7707SVT-2 occupies one card slot and can be housed in a 1RU frame which will hold up to three modules, a 3RU frame which will hold up to 15 modules or a standalone enclosure that will hold 1 module.

Features & Benefits

- Single card fiber optic transmitter for up to two S-Video signals
- Supports both NTSC and PAL video signals
- Broadcast quality 12 bit S-Video performance
- Meets or exceeds EIA/TIA RS250-C short haul specifications for analog video transport
- Superior digital data transmission
- Signal transport over fiber is uninterrupted by loss of input video feeds
- Comprehensive signal and card status monitoring via four digit card edge display or remotely through SNMP and VistaLINK®
- Supports single-mode and multi-mode fiber optic cable
- Fully hot-swappable from front of frame with no fiber disconnect/reconnect required
- VistaLINK® capability is available when modules are used with the 3RU 7700FR-C frame and a 7700FC VistaLINK® Frame Controller module in slot 1 of the frame
- Optical output wavelengths of 1310nm, 1550nm, and up to sixteen CWDM wavelengths (ITU-T G.694.2 compliant)
- DWDM wavelengths (ITU-T G.694.1 compliant) also available

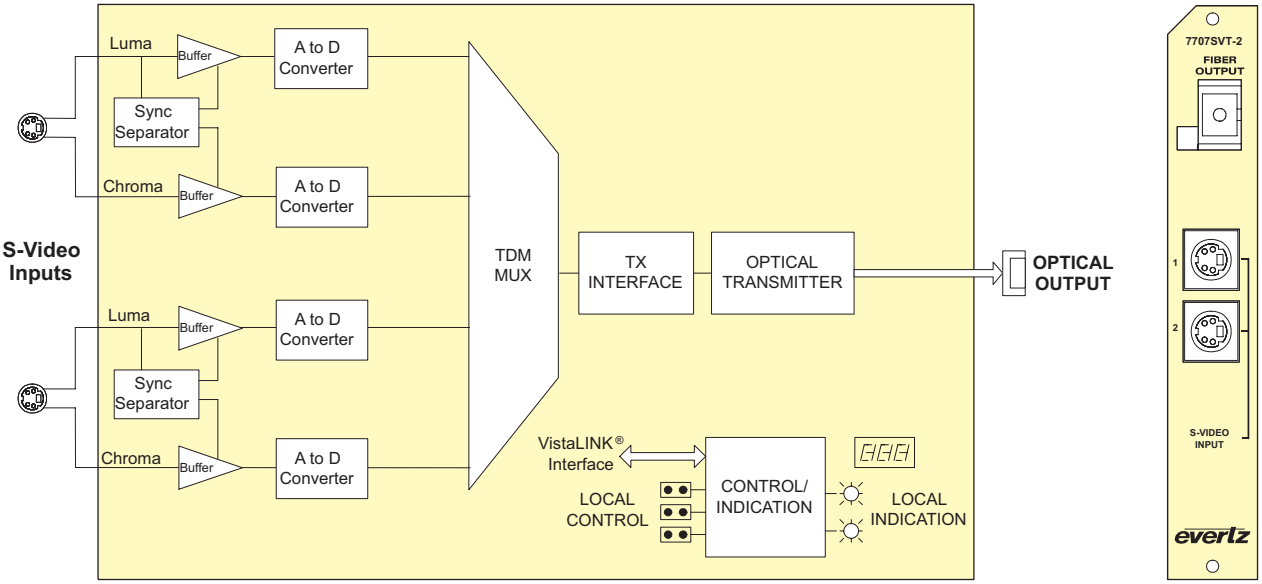

Specifications

Analog S-Video Input:

Standards:	NTSC, SMPTE 170M, PAL, ITU-R 624-4
Number of Inputs:	2
Connector:	IEC 933-5 (4-pin mini-DIN)
Signal Quantization:	12 bits
System Bandwidth:	5.5MHz
Input Level:	Y: 1.0V p-p, C: 0.286V p-p
Input impedance:	75Ω
Return Loss:	> 30dB to 5.5MHz
Signal/Noise Ratio:	> 70dB
Differential Gain:	< 1.0%
Differential Phase:	< 0.7°
Passband Ripple:	
NTSC:	< ±0.1dB to 4.1MHz
	< ±0.2dB to 5.5MHz
PAL:	< ±0.1dB to 4.8MHz
	< ±0.2dB to 5.8MHz
Line Time Distortion:	1.2%

Optical Outputs:

Number of Outputs:	1
Connector:	Female SC/PC, ST/PC or FC/PC
Return Loss:	> 14dB
Wavelengths:	
Standard:	1310nm, 1550nm (nominal)
CWDM:	See Ordering Information
DWDM:	See Ordering Information
Output Power:	
1310nm FP (Standard):	-7dBm ±1dBm
1550 & CWDM DFB:	0dBm ±1dBm
DWDM:	+7dBm ±1dBm

System Performance (7707SVT-2 + 7707SVR-2):

Video Input to Output Delay:	< 10µs

Electrical:

Voltage:	+12V DC
Power:	11/12W (Non-DWDM), 13/14W (DWDM)

Physical:

Number of slots:	1

Compliance:

Electrical Safety:	CSA Listed to UL 60065-03, IEC 60065 Complies with CE Low voltage Directive
Laser Safety:	Class 1 laser product Complies with 24 CFR 1040.10 and 1040.11 IEC 60825-1
EMI/RFI:	Complies with FCC Part 15, Class A EU EMC directive

Ordering Information

7707SVT13-2	Dual S-Video Fiber Transmitter, 1310nm FP Laser, VistaLINK®
7707SVT15-2	Dual S-Video Fiber Transmitter, 1550nm DFB Laser, VistaLINK®
For CWDM, please refer to the end of the fiber section for ordering information	
7707SVTxx-2	Dual S-Video Fiber Transmitter CWDM DFB Laser, VistaLINK®
For DWDM, please refer to the end of the fiber section for ordering information	
7707SVTDxxx-2	Dual S-Video Fiber Transmitter DWDM DFB Laser, VistaLINK®

Ordering Options Rear Plate and Fiber Connector must be specified at time of order
Eg: Model +SC +3RU

Rear Plate Suffix

+3RU	3RU Rear Plate for use with 7700FR-C Multiframe
+1RU	1RU Rear Plate for use with 7701FR Multiframe
+SA	Standalone Enclosure Rear Plate

Connector Suffix

+SC	SC/PC
+ST	ST/PC
+FC	FC/PC

Enclosures

7700FR-C	3RU Multiframe which holds up to 15 single slot modules
7701FR	1RU Multiframe which holds up to 3 single or dual slot modules
S7701FR	Standalone Enclosure

7707CVRA & 7707CVRA-2

Single / Dual Analog Video with 4-Channel Analog Audio Fiber Receiver

The 7707CVRA is a VistaLINK® capable, composite analog video and analog audio fiber receiver for broadcast quality video signals. This single card module accepts a fiber optic input from the companion 7707CVTA Composite Video and Analog Audio Fiber Transmitter, demultiplexes the signals, performs D to A conversion and outputs NTSC or PAL analog video and up to four balanced analog audio signals.

The 7707CVRA-2 Dual Composite Video and Analog Audio Fiber Receiver is a dual channel version that accepts a fiber optic input from the companion 7707CVTA-2 transmitter, demultiplexes the signals, performs D to A conversion and outputs 2 NTSC or PAL analog video signals and up to four balanced analog audio signals.

Features & Benefits

- Single card fiber optic receiver for one or two analog video and four analog audio signals
- Supports both NTSC and PAL video signals
- Broadcast quality analog video and audio performance
- Meets or exceeds EIA/TIA RS250-C short haul specifications for analog video and audio transport
- Adjustable gain, DC offset and pre-emphasis for up to 250m of Belden 1694A coaxial cable
- Low Audio to Video latency
- Comprehensive signal and card status monitoring via four digit card edge display or remotely through SNMP and VistaLINK®
- VistaLINK® capability is available when modules are used with the 3RU 7700FR-C frame and a 7700FC VistaLINK® Frame Controller module in slot 1 of the frame
- Fully hot-swappable from front of frame with no fiber disconnect/reconnect required
- Supports single-mode and multi-mode fiber optic cable
- Accepts any wavelength in the 1270nm to 1610nm range

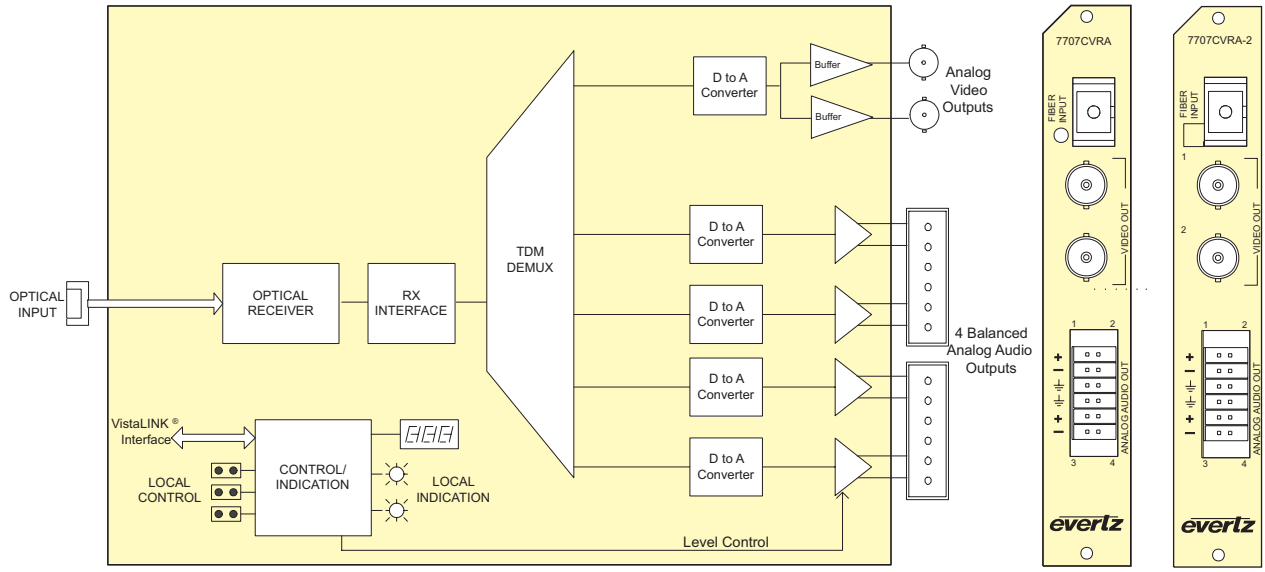

Specifications

Optical Input:

Number of Inputs:	1
Connector:	Female SC/PC, ST/PC, FC/PC
Operating Wavelength:	1270nm to 1610nm
Max. Input Power:	0dBm
Optical Sensitivity:	
Standard:	-24dBm
High Sensitivity:	-31dBm

Analog Video Outputs:

Standards:	NTSC, SMPTE 170M, PAL, ITU-R624-4
Number of Outputs:	2 on 7707CVRA 2 (1 per video channel) on7707CVRA-2
Connector:	BNC per IEC 60169-8 Amendment 2
System bandwidth:	5.5MHz
Output Level:	1V p-p (nominal), 2V p-p maximum
Gain:	Unity gain nominal, adjustable 50% to 150%
Output Impedance:	75Ω
Return Loss:	> 20dB
SNR:	> 70dB
Differential Gain:	< 1.0%
Differential Phase:	< 0.7°
Pre-Emphasis:	Cable loss compensation for up to 250m of Belden 1694A (each output adjustable separately)
Passband Ripple:	
NTSC:	< ±0.1dB to 4.1MHz and < ±0.2dB to 5.5MHz
PAL:	< ±0.1dB to 4.8MHz and < ±0.2dB to 5.8MHz
Chroma/Luma Gain:	98%-103%
Chroma/Luma Delay:	
NTSC:	< 5ns
PAL:	< 12ns
Line Time Distortion:	1.2%

Analog Audio Outputs:

Number of Outputs:	4
Type:	Balanced analog audio
Connector:	12-pin removable terminal block
Output impedance:	66Ω
Freq. Response:	±0.1dB, 20Hz to 20kHz
THD 20Hz-20kHz:	< 0.005%
Channel Phase Diff.:	±1°
SNR (weighted):	> 85dB
Output Level Adj:	-20dB to +3dB
Max Output Level:	+24dBu into 10kΩ loads

System Performance (7707CVTA + 7707CVRA or 7707CVTA-2 + 7707CVRA-2):

Video Input to Output Delay:	< 10µs
Audio Input to Output Delay:	< 1.9ms

Electrical:

Voltage:	+12V DC
Power:	12W
EMI/RFI:	Complies with FCC Part 15, Class A EU EMC directive

Physical:

Number of slots:	1

Ordering Information

7707CVRA	Analog Video with 4-Channel Analog Audio Fiber Receiver, VistaLINK®
7707CVRA-2	Dual Analog Video with 4-Channel Analog Audio Fiber Receiver, VistaLINK®
7707CVRA-H	Analog Video with 4-Channel Analog Audio High Sensitivity Receiver, VistaLINK®
7707CVRA-2-H	Dual Analog Video with 4-Channel Analog Audio High Sensitivity Receiver, VistaLINK®

Ordering Options Rear Plate and Fiber Connector must be specified at time of order
Eg: Model +SC +3RU

Rear Plate Suffix

+3RU	3RU Rear Plate for use with 7700FR-C Multiframe
+1RU	1RU Rear Plate for use with 7701FR Multiframe
+SA	Standalone Enclosure Rear Plate

Connector Suffix

+SC	SC/PC
+ST	ST/PC
+FC	FC/PC

Enclosures

7700FR-C	3RU Multiframe which holds up to 15 single slot modules
7701FR	1RU Multiframe which holds up to 3 single or dual slot modules
S7701FR	Standalone Enclosure

7707CVR-4, 7707CVR-4-A16

Quad Analog Video and 16 Analog Audio Fiber Receiver

The 7707CVR-4 and 7707CVR-4-A16 are VistaLINK® - capable, composite analog analog/video fiber receivers for broadcast quality analog video and audio signals. These single card modules accept fiber optic input from their companions 7707CVT-4 and 7707CVT-4-A16 fiber transmitters, demultiplexes the signals, performs D to A conversion and outputs NTSC or PAL analog video and audio.

The 7707CVR-4 occupy a one card slot and the 7707CVR-4-A16 occupies a two card slot and can be housed in a 1RU frame which will hold up to 3 modules, a 3 RU frame which will hold up to 7 modules or a standalone enclosure which will hold 1 module.

Features & Benefits

- Single card fiber optic receiver for up to four analog video, 16 analog audio signals
- Supports both NTSC and PAL video signals
- Broadcast quality analog video and audio performance
- Meets or exceeds EIA/TIA RS250-C short haul specifications for analog video transport
- Adjustable gain, DC offset and pre-emphasis for up to 250m of Belden 1694A coaxial cable
- Comprehensive signal and card status monitoring via four digit card edge display or remotely through SNMP and VistaLINK®
- VistaLINK® capability is available when modules are used with the 3RU 7700FR-C frame and a 7700FC VistaLINK® Frame Controller module in slot 1 of the frame
- Fully hot-swappable from front of frame with no fiber disconnect/reconnect required
- Supports single-mode and multi-mode fiber optic cable
- Accepts any wavelength in the 1270nm to 1610nm range

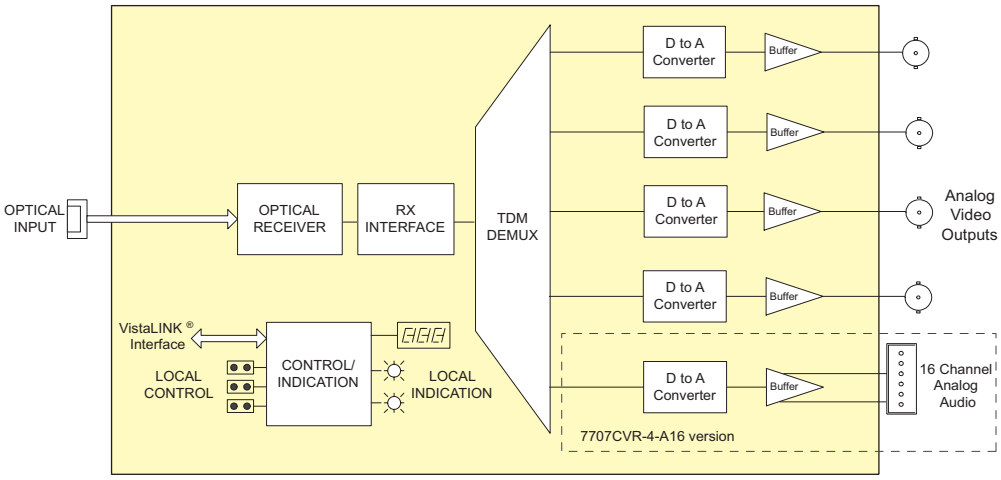

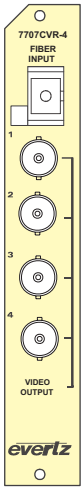

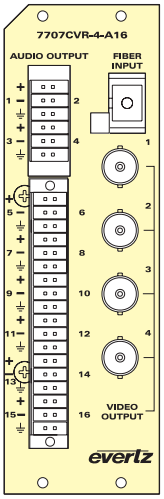

Specifications

Optical Input:
Number of Inputs: 1
Connector: Female SC/PC, ST/PC, FC/PC
Operating Wavelength: 1270nm to 1610nm
Max. Input Power: 0dBm
Optical Sensitivity:
Standard: -25dBm
High Sensitivity: -30dBm

Analog Video Outputs:
Standards: NTSC, SMPTE 170M, PAL, ITU-R624-4
Number of Outputs: 4
Connector: BNC per IEC 60169-8 Amendment 2
System bandwidth: 5.5MHz
Output Level: 1V p-p (nominal), 2V p-p maximum
Gain: Unity gain nominal, adjustable 50% to 150%
Output Impedance: 75Ω
Return Loss: > 20dB
SNR: > 70dB
Differential Gain: < 1.0%
Differential Phase: < 0.7°
Pre-Emphasis: Cable loss compensation for up to 250m of Belden 1694A (each output adjustable separately)
Passband Ripple:
NTSC: < ±0.1dB to 4.1MHz and < ±0.2dB to 5.5MHz
PAL: < ±0.1dB to 4.8MHz and < ±0.2dB to 5.8MHz
Chroma/Luma Gain: 98%-103%
Chroma/Luma Delay:
NTSC: < 5ns
PAL: < 12ns
Line Time Distortion: 1.2%

Analog Audio Outputs (7707CVR-4-A16):
Number of Outputs: 16
Type: Balanced analog audio
Connector: 48-pin removable terminal block
Output impedance: 66Ω
Freq. Response: ±0.1dB, 20Hz to 20kHz
THD 20Hz-20kHz: < 0.005%
Channel Phase Diff.: ±1°
SNR (weighted): > 85dB
Output Level Adj: -20dB to +3dB
Max Output Level: +24dBu into 10kΩ loads

Electrical:
Voltage: +12V DC
Power: 12W

Physical:
Number of slots: 1

Ordering Information

7707CVR-4	Quad Analog Video Fiber Receiver, VistaLINK®
7707CVR-4-H	Quad Analog Video Fiber Receiver, High Sensitivity, VistaLINK®
7707CVR-4-A16	Quad Analog Video, 16 Analog Audio, Fiber Receiver, VistaLINK®
7707CVR-4-A16 -H	Quad Analog Video, 16 Analog Audio, Fiber Receiver, High Sensitivity, VistaLINK®
Ordering Options	Rear Plate and Fiber Connector must be specified at time of order Eg: Model +SC +3RU

Rear Plate Suffix

+3RU	3RU Rear Plate for use with 7700FR-C Multiframe
+1RU	1RU Rear Plate for use with 7701FR Multiframe
+SA	Standalone Enclosure Rear Plate

Connector Suffix

+SC	SC/PC
+ST	ST/PC
+FC	FC/PC

Enclosures

7700FR-C	3RU Multiframe which holds up to 15 single slot modules
7701FR	1RU Multiframe which holds up to 3 single or dual slot modules
S7701FR	Standalone Enclosure

The 7707SVR-2 is a VistaLINK® capable, S-Video fiber receiver for broadcast quality video signals. This single card module accepts a fiber optic input from the companion 7707SVT-2 S-Video Fiber Transmitter, demultiplexes the signals, performs D to A conversion and outputs NTSC or PAL S-Video signals.

The 7707SVR-2 occupies one card slot and can be housed in a 1RU frame which will hold up to 3 modules, a 3 RU frame which will hold up to 15 modules or a standalone enclosure which will hold 1 module.

Features & Benefits

- Single card fiber optic receiver for up to two S-Video signals
- Supports both NTSC and PAL video signals
- Broadcast quality S-Video performance
- Meets or exceeds EIA/TIA RS250-C short haul specifications for analog video transport
- Comprehensive signal and card status monitoring via four digit card edge display or remotely through SNMP and VistaLINK®
- VistaLINK® capability is available when modules are used with the 3RU 7700FR-C frame and a 7700FC VistaLINK® Frame Controller module in slot 1 of the frame
- Fully hot-swappable from front of frame with no fiber disconnect/reconnect required
- Supports single-mode and multi-mode fiber optic cable
- Accepts any wavelength in the 1270nm to 1610nm range

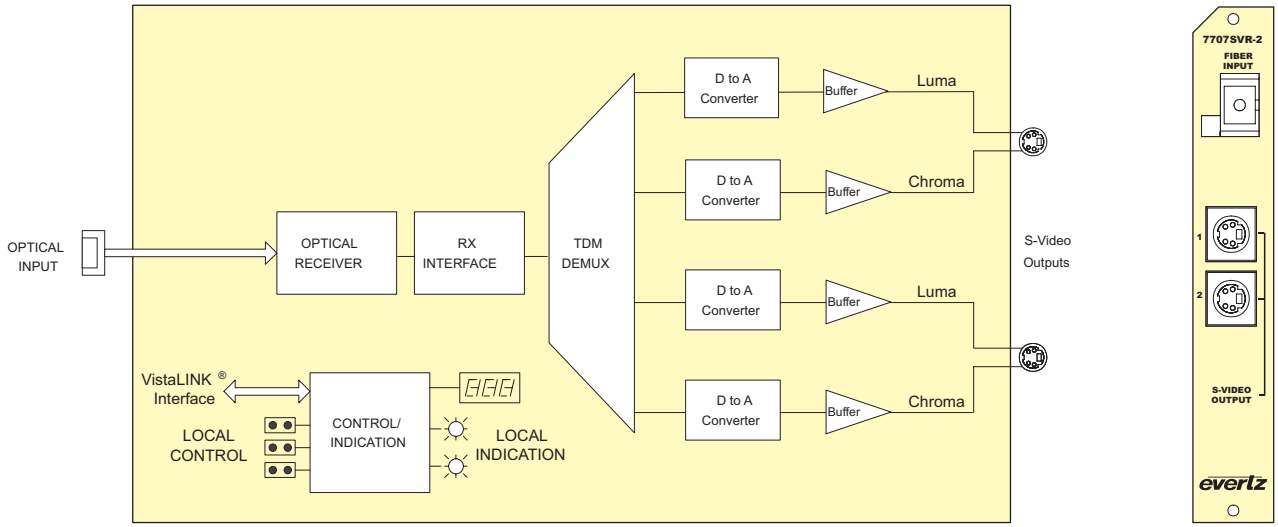

Specifications

Optical Input:
Number of Inputs: 1
Connector: Female SC/PC, ST/PC, FC/PC
Operating Wavelength: 1270nm to 1610nm
Max. Input Power: 0dBm
Optical Sensitivity: -28dBm

S-Video Outputs:
Standards: NTSC, SMPTE 170M, PAL, ITU-R624-4
Number of Outputs: 2
Connector: IEC 933-5 (4-pin mini-DIN)
System bandwidth: 5.5MHz
Output Level: Y: 1.0V p-p, C: 0.286V p-p
Output Impedance: 75Ω
Return Loss: > 20dB
SNR: > 70dB
Differential Gain: < 1.0%
Differential Phase: < 0.7°
Passband Ripple:
NTSC: < ±0.1dB to 4.1MHz and < ±0.2dB to 5.5MHz
PAL: < ±0.1dB to 4.8MHz and < ±0.2dB to 5.8MHz

System Performance (7707SVT-2 + 7707SVR-2):
Video Input to Output Delay: < 10µs

Electrical:
Voltage: +12V DC
Power: 12W
EMI/RFI: Complies with FCC Part 15, Class A EU EMC directive

Physical:
Number of slots: 1

Ordering Information

7707SVR-2 Dual S-Video Fiber Receiver, VistaLINK®

Ordering Options Rear Plate and Fiber Connector must be specified at time of order
Eg: Model +SC +3RU

Rear Plate Suffix
+3RU 3RU Rear Plate for use with 7700FR-C Multiframe
+1RU 1RU Rear Plate for use with 7701FR Multiframe
+SA Standalone Enclosure Rear Plate

Connector Suffix
+SC SC/PC
+ST ST/PC
+FC FC/PC

Enclosures
7700FR-C 3RU Multiframe which holds up to 15 single slot modules
7701FR 1RU Multiframe which holds up to 3 single or dual slot modules
S7701FR Standalone Enclosure

7707RGBT

RGBHV / DVI / KVM Fiber Transmitter

The 7707RGBT is a VistaLINK® SNMP capable RGBHV/DVI/KVM fiber transmitter for high resolution/high quality video signals. This single card module accepts one analog RGBHV or digital DVI video input up to WUXGA resolution and transmits them over a single or dual fiber/coax. The 7707RGBT is also available with analog audio, keyboard + mouse, serial and USB options. The companion 7707RGBR RGBHV/DVI/KVM Fiber Receiver demultiplexes the signals and converts them back to analog RGBHV and digital DVI.

The -EO version provides an electrical I/O path via coax in addition to the fiber I/O path. This allows the cards to interface with electrical devices supporting 3Gb/s (i.e. electrical router) while providing the capability to convert the electrical signal back to optical on the same card.

The fiber output is available in an assortment of optical wavelengths, accommodating 1310/1550nm, CWDM and DWDM transmission schemes.

The 7707RGBT series occupy one or two card slots (See the physical specifications for the slot count of the specific card). They can be housed in a 1RU frame, which will hold up to 3 modules, a 3RU frame which will hold up to 15 modules, or a standalone enclosure which will hold 1 module.

Features & Benefits

- Supports DVI or RGBHV transport over a single fiber or coax (-C version)
- Both RGBHV and DVI outputs available simultaneously on companion 7707RGBR Receiver
- VESA video resolutions supported up to WUXGA
- Full 24 bits per pixel color resolution
- Ideal for use with high resolution LCD, plasma, and projection screens
- Superior digital data transmission
- Comprehensive signal and card status monitoring via four digit card edge display or remotely through SNMP and VistaLINK®
- VistaLINK® capability is available when modules are used with the 3RU 7700FR-C frame and a 7700FC VistaLINK® Frame Controller module in slot 1 of the frame
- Fully hot-swappable from front of frame with no fiber disconnect/reconnect required
- Supports single-mode and multi-mode fiber optic cable
- Optical output wavelengths at 1310nm, 1550nm and up to sixteen CWDM wavelengths (ITU-T G.694.2 compliant)
- DWDM wavelengths (ITU-T G.694.1 compliant) also available
- Optional 2 channel stereo analog audio
- Optional keyboard, mouse and serial
- Optional USB interface
- Optional coaxial BNC connectors with additional optical/electrical conversion
- Optional G-Link support for use with Evertz VIP™ & MVP™ Multi-display products
- Optional coax I/O for Tx & Rx (*Please Contact Factory)

7707RGBT Application Configurations

FIBER TYPE	FIBERS	OPTICAL/LINK BUDGET	TRANSMIT SIDE		RECEIVE SIDE		DESCRIPTION
			ORDERING PRODUCT INFO	TX POWER	ORDERING PRODUCT INFO	RX SENSITIVITY	
Multi-Mode	2	< 500m	7707RGBT13-A2KM-USB-F2	-7dBm	7707RGBR13-A2KM-USB-F2	-19dBm	1310nm on Tx & Rx fibers
Single-Mode	2	12dB/34km	7707RGBT13-A2KM-USB-F2	-7dBm	7707RGBR13-A2KM-USB-F2	-19dBm	1310nm on Tx & Rx fibers
Single-Mode	1	8dB/20km*	7707RGBT15-A2KM-W	-1dBm	7707RGBR13-A2KM-W	-17dBm	1310nm/1550nm WDM bi-directional, one fiber
Single-Mode	1 (CWDM)	15.5dB/60km**	7707RGBTxx-A2KM-USB-F2	0dBm	7707RGBRxx-A2KM-USB-F2	-19dBm	Different CWDM wavelengths for Tx & Rx, with 8 channel CWDMux/Demux**
Single-Mode	1 (DWDM)	21dB/80km***	7707RGBTDxxx-A2KM-USB-F2	+7dBm	7707RGBRDxxx-A2KM-USB-F2	-19dBm	Different DWDM wavelengths for Tx & Rx, with 8 channel DWDMx/Demux**

*** With > 20dB return loss on fiber interface**
****Assumes 8 Ch CWDM Mux/Demux loss of 3.5dB**
*****Assumes 8 Ch DWDM Mux/Demux loss of 5dB**

Tx Power/Rx Sensitivity are nominal values ±1dBm
Fiber loss= 0.35/0.25dB per km @ 1310nm/1550nm
Note: Same TX power & Rx sensitivity applies for -C versions with Fiber I/O

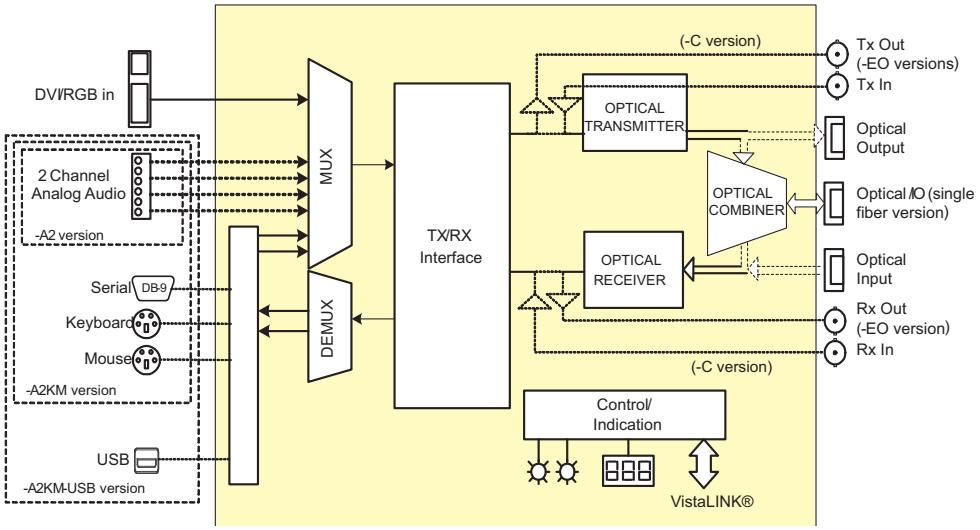

7707RGBT

RGBHV / DVI / KVM Fiber Transmitter

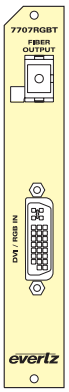

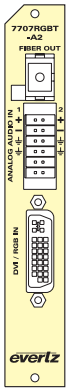

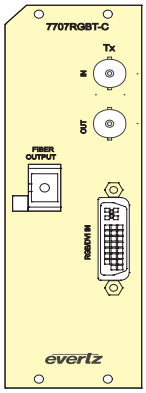

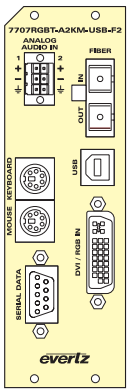

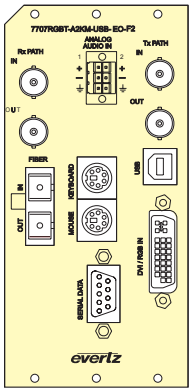

Specifications

Video Input:

Standards:	DVI 1.0, VESA
Number of Inputs:	1
Connectors:	28-pin DVI with Analog
Video Resolution:	Up to WUXGA (1920x1200) at 75Hz
Video Bandwidth:	500MHz
Color Resolution:	24 bits
Analog Output Level:	1V p-p (maximum)
Analog Output Impedance:	75Ω
Signal/Noise Ratio:	> 55dB

Analog Audio Input (A2, A2KM & A2KM-USB versions):

Number of Inputs:	2
Type:	Balanced analog audio
Connector:	12-pin removable terminal block
Impedance	High Impedance (> 20kΩ)
Frequency Response:	±0.1dB (20Hz to 20kHz)
THD:	< 0.005% (20Hz to 20kHz)
Channel Phase Diff:	< ±1°
SNR:	> 85dB
Max. Input Level:	+24dBu
Signal Quantization:	24 bits

Serial, Keyboard/Mouse, USB Input/Output (A2KM & A2KM-USB versions):

Standards:	USB 1.1
Number:	3 (A2KM versions), 4 (USB versions)
Connector:	2 PS2 for keyboard & mouse 1 USB Type B, 1DB-9F serial

Coaxial Input/Output:

Number:	1or 2
Connector:	BNC per IEC 60169-8 Amendment 2

Optical Output:

Number of Outputs:	1
Connector:	Female SC/PC, ST/PC or FC/PC
Wavelengths:	See Ordering Information
Output Power:	See Application Configuration Chart

Optical Inputs:

Number of Inputs:	1
Connector:	Female SC/PC, ST/PC, FC/PC
Wavelength:	1270 to 1610nm
Maximum Power:	0dBm
Optical Sensitivity:	See Application Configuration Chart

Electrical:

Voltage:	+12V DC
Power:	11W (Non-DWDM), 14W (DWDM)

Physical:

Number of Slots:	1 (Standard and A2 versions) 2 (A2KM, and A2KM-USB versions)

Compliance:

Electrical Safety:	CSA Listed to UL 60065-03, IEC 60065 Complies with CE Low voltage Directive
Laser Safety:	Class 1 laser product Complies with 24 CFR 1040.10 and 1040.11 IEC 60825-1
EMI/RFI:	Complies with FCC Part 15, Class A EU EMC directive

Ordering Information

Fiber Only Versions

7707RGBT13	RGBHV/DVI Fiber Transmitter, 1310nm FP
7707RGBT13-A2	RGBHV/DVI + 2 Analog Audio Fiber Transmitter, 1310nm FP Laser
7707RGBT13-A2KM-F2	RGBHV/DVI +2 Analog Audio + Bi-di Keyboard and Mouse Fiber Transmitter, dual fiber, 1310nm
7707RGBT13-A2KM-USB-F2	RGBHV/DVI +2 Analog Audio + Bi-di Keyboard and Mouse + USB Fiber Transmitter, dual fiber, 1310nm TX & RX
7707RGBT15-A2KM-W	RGBHV/DVI +2 Analog Audio + Bi-di Keyboard and Mouse single fiber, TX on 1550nm, RX on 1310nm
7707RGBT15-A2KM-USB-W	RGBHV/DVI/KVM +2 Analog Audio + Bi-di Keyboard and Mouse Fiber Transmitter + USB, single fiber, TX on 1550nm, RX on 1310nm
7707RGBTxx	RGBHV/DVI Fiber Transmitter, CWDM Laser (Ordering Information)
7707RGBTxx-A2	RGBHV/DVI Fiber Transmitter + 2 Analog Audio, CWDM Laser (Ordering Info)
7707RGBTxx-A2KM-F2	RGBHV/DVI Fiber Transmitter +2 Analog Audio + Bi-di Keyboard and Mouse dual fiber, CWDM Laser (Ordering Information)
7707RGBTxx-A2KM-USB-F2	RGBHV/DVI/KVM +2 Analog Audio + Bi-di Keyboard Mouse + USB Fiber Transmitter, dual fiber, CWDM Laser (Ordering Info)
7707RGBTDxxx	RGBHV/DVI Fiber Transmitter, DWDM Laser (Ordering Information)
7707RGBTDxxx-A2	RGBHV/DVI + 2 Analog Audio Fiber Transmitter, DWDM Laser (Ordering Information)
7707RGBTDxxx-A2KM-F2	RGBHV/DVI +2 Analog Audio + Bi-di Keyboard and Mouse Fiber Transmitter, dual fiber, DWDM Laser (Ordering Information)
7707RGBTDxxx-A2KM-USB-F2	RGBHV/DVI +2 Analog Audio + Bi-di Keyboard Mouse + USB Fiber Transmitter, dual fiber, DWDM Laser (Ordering Info)

3Gb Coax Versions

7707RGBT-C	RGBHV/DVI Coaxial Transmitter
7707RGBT-A2-C	RGBHV/DVI + 2 Analog Audio, Coaxial Transmitter
7707RGBT-A2KM-C2	RGBHV/DVI +2 Analog Audio + Bi-di Keyboard and Mouse Coaxial Transmitter, dual coax, TX & RX
7707RGBT-A2KM-USB-C2	RGBHV/DVI +2 Analog Audio + Bi-di Keyboard and Mouse + USB Coaxial Transmitter, dual coax, TX & RX

Fiber + 3Gb Coax Versions

7707RGBT13-EO	RGBHV/DVI Coax Transmitter + E to O converter, 1310nm FP
7707RGBT13-A2-EO	RGBHV/DVI + 2 Analog Audio Coax Transmitter + E to O converter, 1310nm FP Laser
7707RGBT13-A2KM-EO-F2	RGBHV/DVI +2 Analog Audio + Bi-di Keyboard and Mouse + USB Coaxial Transmitter + E to O converter, dual fiber/coax, 1310nm TX & RX
7707RGBT13-A2KM-USB-EO-F2	RGBHV/DVI +2 Analog Audio + Bi-di Keyboard and Mouse + USB Coaxial Transmitter + E to O/O to E converter, dual fiber/coax, 1310nm TX & RX
7707RGBTxx-EO	RGBHV/DVI Coax Transmitter + E to O converter, CWDM Laser (Ordering Information)
7707RGBTxx-A2-EO	RGBHV/DVI + 2 Analog Audio Coax Transmitter + E to O converter, CWDM Laser (Ordering Information)
7707RGBTxx-A2KM-EO-F2	RGBHV/DVI +2 Analog Audio + Bi-di Keyboard and Mouse Coaxial Transmitter + E to O converter, dual fiber/coax, CWDM Laser (Ordering Information)
7707RGBTxx-A2KM-USB-EO-F2	RGBHV/DVI/KVM +2 Analog Audio + Bi-di Keyboard Mouse + USB Coaxial Transmitter + E to O converter, dual fiber/coax, CWDM Laser (Ordering Information)
7707RGBTDxxx-EO	RGBHV/DVI Coax Transmitter + E to O converter, DWDM Laser (Ordering Information)
7707RGBTDxxx-A2-EO	RGBHV/DVI + 2 Analog Audio Coax Transmitter + E to O converter, DWDM Laser (Ordering Information)
7707RGBTDxxx-A2KM-EO-F2	RGBHV/DVI +2 Analog Audio + Bi-di Keyboard and Mouse Coaxial Transmitter + E to O converter, dual fiber/coax, DWDM Laser (Ordering Information)
7707RGBTDxxx-A2KM-USB-EO-F2	RGBHV/DVI/KVM +2 Analog Audio + Bi-di Keyboard Mouse + USB Coaxial Transmitter + E to O converter, dual fiber/coax, DWDM Laser (Ordering Information

G-Link Versions

7707RGBT-GC	RGBHV/DVI G-Link Coaxial Transmitter
7707RGBT-GF	RGBHV/DVI G-Link Fiber Transmitter, 1310nm FP Laser
7707RGBT-A2-GC	RGBHV/DVI + 2 Analog Audio, G-Link Coaxial Transmitter
7707RGBT-A2-GF	RGBHV/DVI + 2 Analog Audio, G-Link Fiber Transmitter, 1310nm FP Laser

Ordering Options — Rear Plate and Fiber Connector must be specified at time of order Eg: Model +SC +3RU

Rear Plate Suffix

+3RU	3RU rear plate for use with 7700FR-C Multiframe
+1RU	1RU rear plate for use with 7701FR Multiframe
+SA	Standalone Enclosure Rear Plate

Connector Suffix

+SC	SC/PC
+ST	ST/PC
+FC	FC/PC

Enclosures

7700FR-C	3RU Multiframe which holds up to 15 single slot modules
7701FR	1RU Multiframe which holds up to 3 single or dual slot modules
S7701FR	Standalone enclosure

7707RGBR

RGBHV / DVI / KVM Fiber Receiver

The 7707RGBR is a VistaLINK® SNMP capable RGBHV/DVI/KVM receiver for high resolution/high quality video signals. Available in fiber optic and coaxial versions, this single card module accepts an input from the companion 7707RGBT RGHV/DVI/KVM Transmitter and outputs both analog RGBHV and digital DVI video. The 7707RGBR is also available with analog audio, keyboard + mouse, serial and USB options.

The 7707RGBR occupies one card slot (two card slots for the A2KM and A2KM-USB versions) and can be housed in a 1RU frame which will hold up to 3 modules, a 3RU frame which will hold up to 15 modules or a standalone enclosure which will hold 1 module.

Features & Benefits

- Supports DVI or RGBHV transport over a single fiber or coax (-C version)
- Provides both RGBHV and DVI outputs simultaneously
- VESA video resolutions supported up to WUXGA
- Full 24 bits per pixel color resolution
- Ideal for use with high resolution LCD, plasma, and projection screens
- Superior digital data transmission
- Comprehensive signal and card status monitoring via four digit card edge display or remotely through SNMP and VistaLINK®
- VistaLINK® capability is available when modules are used with the 3RU 7700FR-C frame and a 7700FC VistaLINK® Frame Controller module in slot 1 of the frame
- Fully hot-swappable from front of frame with no fiber disconnect/re-connect required
- Supports single-mode and multi-mode fiber optic cable
- Accepts any wavelength in the 1270nm to 1610nm range
- Optional 2 channel stereo analog audio
- Optional keyboard, mouse and serial
- Optional USB interface
- Optional G-Link support for use with Evertz VIP™ & MVP™ Multi-display products
- Optional coax I/O for Tx & Rx (*Please Contact Factory)

7707RGBR Application Configurations

FIBER TYPE	FIBERS	OPTICAL/LINK BUDGET	TRANSMIT SIDE		RECEIVE SIDE		DESCRIPTION
			ORDERING PRODUCT INFO	TX POWER	ORDERING PRODUCT INFO	RX SENSITIVITY	
Multi-Mode	2	< 500m	7707RGBT13-A2KM-USB-F2	-7dBm	7707RGBR13-A2KM-USB-F2	-19dBm	1310nm on Tx & Rx fibers
Single-Mode	2	12dB/34km	7707RGBT13-A2KM-USB-F2	-7dBm	7707RGBR13-A2KM-USB-F2	-19dBm	1310nm on Tx & Rx fibers
Single-Mode	1	8dB/20km*	7707RGBT15-A2KM-W	-1dBm	7707RGBR13M-A2KM-W	-17dBm	1310nm/1550nm WDM bi-directional, one fiber
Single-Mode	1 (CWDM)	15.5dB/60km**	7707RGBTxx-A2KM-USB-F2	0dBm	7707RGBRxx-A2KM-USB-F2	-19dBm	Different CWDM wavelengths for Tx & Rx, with 8 channel CWDM Mux/Demux**
Single-Mode	1 (DWDM)	21dB/80km***	7707RGBTDxxx-A2KM-USB-F2	+7dBm	7707RGBRDxxx-A2KM-USB-F2	-19dBm	Different DWDM wavelengths for Tx & Rx, with 8 channel DWDM Mux/Demux**

*With > 20dB return loss on fiber interface
**Assumes 8 Ch CWDM Mux/Demux loss of 3.5dB
***Assumes 8 Ch DWDM Mux/Demux loss of 5dB

Tx Power/Rx Sensitivity are nominal values ±1dBm
Fiber loss= 0.35/0.25dB per km @ 1310nm/1550nm

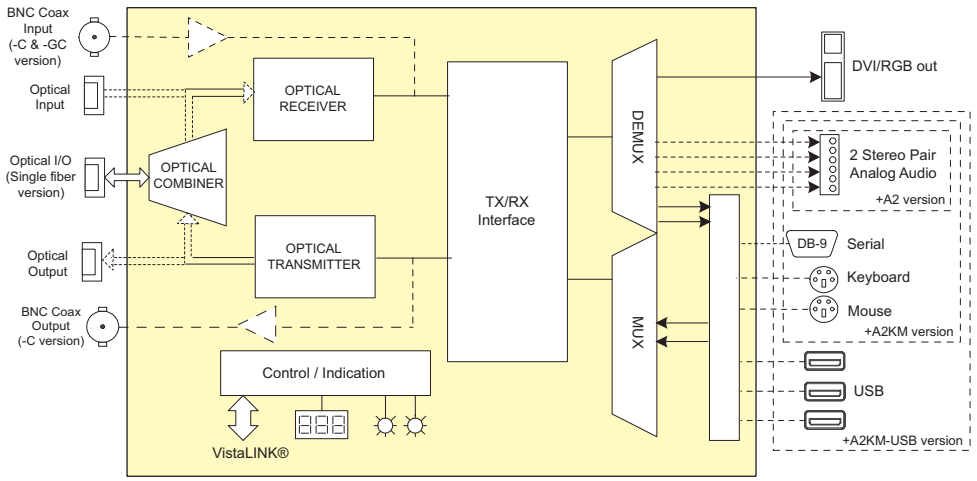

7707RGBR

RGBHV / DVI / KVM Fiber Receiver

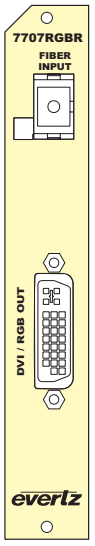

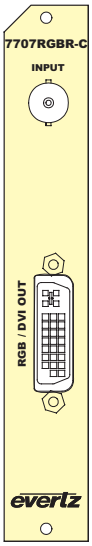

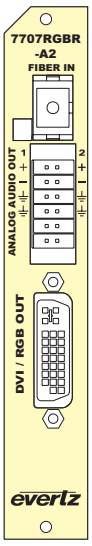

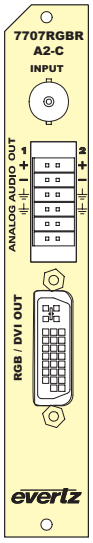

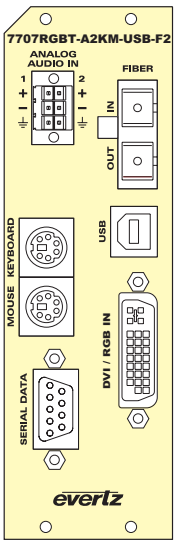

Specifications

Video Output:
Standards: DVI 1.0, VESA
Number of Outputs: 1
Connectors: 28-pin DVI with Analog
Video Resolution: Up to WUXGA (1920x1200) at 75Hz
Video Bandwidth: 500MHz
Color Resolution: 24 bits
Analog Output Level: 1.4V p-p (maximum)
Analog Output Impedance: 75Ω
Signal/Noise Ratio: >55dB

Analog Audio Output (A2, A2KM & A2KM-USB-F2 versions):
Number of Outputs: 2
Type: Balanced analog audio
Connector: 12-pin removable terminal block
Impedance High Impedance (> 20kΩ)
Frequency Response: ±0.1dB (20Hz to 20kHz)
THD: < 0.005% (20Hz to 20kHz)
Channel Phase Diff: < ±1°
SNR: > 85dB
Level: -20dB to +3dB
Max. Output Level: +24dBu into 10kΩ loads

Serial, Keyboard/Mouse, USB Input/Output (A2KM & A2KM-USB versions):
Standards: USB 1.1
Number: 3 (A2KM versions), 6 (USB versions)
Connector: 2 PS2 for keyboard & mouse
3 USB Type A, 1DB-9F serial

Optical Input:
Number of Inputs: 1
Connector: Female SC/PC, ST/PC or FC/PC
Operating Wavelength: 1270nm-1610nm
Max Input Power: 0dBm
Optical Sensitivity: See Application Configuration chart

Coaxial Input:
Number of Inputs: 1
Connector: BNC per IEC 60169-8 Amendment 2

Optical Output:
Number of Outputs: 1
Connector: Female SC/PC, ST/PC, FC/PC
Wavelengths: See Ordering Information
Power: See Application Configuration Chart

Coaxial Output:
Number of outputs: 1
Connector: BNC per IEC 60169-8 Amendment 2

Electrical:
Voltage: +12V DC
Power: 11W (Non-DWDM), 14W (DWDM)

Physical:
Number of Slots: 1 (Standard versions)
2 (A2KM versions)

Compliance:
Electrical Safety: CSA Listed to UL 60065-03, IEC 60065
Complies with CE Low voltage Directive
Laser Safety: Class 1 laser product
Complies with 24 CFR 1040.10 and 1040.11
IEC 60825-1
EMI/RFI: Complies with FCC Part 15, Class A
EU EMC directive

Ordering Information

Fiber Only Versions

7707RGBR RGBHV/DVI Fiber Receiver
7707RGBR-A2 RGBHV/DVI +2 Analog Audio Fiber Receiver
7707RGBR13-A2KM-F2
RGBHV/DVI/KVM +2 Analog Audio + Bi-di Keyboard and Mouse Fiber Receiver, dual fiber, 1310nm TX & RX
7707RGBR13-A2KM-USB-F2
RGBHV/DVI/KVM +2 Analog Audio + Bi-di Keyboard and Mouse + USB, Fiber Receiver, dual fiber, 1310nm TX & RX
7707RGBR13M-A2KM-W
RGBHV/DVI/KVM +2 Analog Audio + Bi-di Keyboard and Mouse Fiber Receiver, single fiber, 1310nm TX, RX on 1550nm
7707RGBR13M-A2KM-USB-W
RGBHV/DVI/KVM +2 Analog Audio + Bi-di Keyboard and Mouse + USB Fiber Receiver, single fiber, 1310nm TX, RX on 1550nm
7707RGBRxx-A2KM-F2
RGBHV/DVI/KVM +2 Analog Audio + Bi-di Keyboard and Mouse Fiber Receiver, dual fiber, CWDM Laser (Ordering Information)
7707RGBRxx-A2KM-USB-F2
RGBHV/DVI/KVM +2 Analog Audio + Bi-di Keyboard and Mouse + USB Fiber Receiver, dual fiber, CWDM Laser (Ordering Information)
7707RGBRDxxx-A2KM-F2
RGBHV/DVI/KVM +2 Analog Audio + Bi-di Keyboard and Mouse Fiber Receiver, dual fiber, DWDM Laser (Ordering Information)
7707RGBRDxxx-A2KM-USB-F2
RGBHV/DVI/KVM +2 Analog Audio + Bi-di Keyboard and Mouse and USB Fiber Receiver, dual fiber, DWDM Laser (Ordering Information)

3Gb Coax Versions

7707RGBR-C RGBHV/DVI Coaxial Receiver
7707RGBR-A2-C RGBHV/DVI +2 Analog Audio Coaxial Receiver
7707RGBR-A2KM-C2
RGBHV/DVI/KVM +2 Analog Audio + Bi-di Keyboard and Mouse Coaxial Receiver, dual coax, TX & RX
7707RGBR-A2KM-USB-C2
RGBHV/DVI/KVM +2 Analog Audio + Bi-di Keyboard and Mouse + USB Coaxial Receiver, dual coax, TX & RX

G-Link Versions

7707RGBR-GC RGBHV/DVI G-Link Coaxial Receiver
7707RGBR-GF RGBHV/DVI G-Link Fiber Receiver
7707RGBR-A2-GC RGBHV/DVI +2 Analog Audio, G-Link Coaxial Receiver
7707RGBR-A2-GF RGBHV/DVI +2 Analog Audio, G-Link Fiber Receiver

Ordering Options Rear Plate and Fiber Connector must be specified at time of order
Eg: Model +SC +3RU

Rear Plate Suffix
+3RU 3RU rear plate for use with 7700FR-C Multiframe
+1RU 1RU rear plate for use with 7701FR Multiframe
+SA Standalone Enclosure Rear Plate

Connector Suffix
+SC SC/PC
+ST ST/PC
+FC FC/PC

Enclosures
7700FR-C 3RU Multiframe which holds up to 15 single slot modules
7701FR 1RU Multiframe which holds up to 3 single or dual slot modules
S7701FR Standalone enclosure

7707DVIT

DVI / KVM Fiber Transmitter

The 7707DVIT is a VistaLINK® SNMP capable DVI/KVM transmitter for high resolution/high quality video signals. Available in fiber optic versions, this single card module accepts one DVI video input up to WUXGA resolution and transmits it over a single or dual fiber. The 7707DVIT is also available with analog audio, keyboard + mouse, serial and USB options. The companion 7707DVIR DVI/KVM Fiber Receiver demultiplexes the signals and converts them back to digital DVI. The fiber output is available in an assortment of optical wavelengths, accommodating 1310/1550nm, CWDM and DWDM transmission schemes.

The 7707DVIT occupies one card slot (two card slots for the A2KM and A2KM-USB versions) and can be housed in a 1RU frame which will hold up to 3 modules, a 3RU frame which will hold up to 15 modules or a standalone enclosure which will hold 1 module.

Features & Benefits

- VESA video resolutions supported up to WUXGA
- Full 24 bits per pixel color resolution
- Ideal for use with high resolution LCD, plasma, and projection screens
- Superior digital data transmission
- Comprehensive signal and card status monitoring via four digit card edge display or remotely through SNMP and VistaLINK®
- VistaLINK® capability is available when modules are used with the 3RU 7700FR-C frame and a 7700FC VistaLINK® Frame Controller module in slot 1 of the frame
- Fully hot-swappable from front of frame with no fiber disconnect/reconnect required
- Supports single-mode and multi-mode fiber optic cable
- Optical output wavelengths at 1310nm, 1550nm and up to sixteen CWDM wavelengths (ITU-T G.694.2 compliant)
- DWDM wavelengths (ITU-T G.694.1 compliant) also available
- Optional 2 channel stereo analog audio
- Optional keyboard, mouse and serial
- Optional USB interface

7707DVIT Application Configurations

FIBER TYPE	FIBERS	OPTICAL/LINK BUDGET	TRANSMIT SIDE		RECEIVE SIDE		DESCRIPTION
			ORDERING PRODUCT INFO	TX POWER	ORDERING PRODUCT INFO	RX SENSITIVITY	
Multi-Mode	2	< 500m	7707DVIT13-A2KM-USB-F2	-7dBm	7707DVIR13-A2KM-USB-F2	-19dBm	1310nm on Tx & Rx fibers
Single-Mode	2	12dB/34km	7707DVIT13-A2KM-USB-F2	-7dBm	7707DVIR13-A2KM-USB-F2	-19dBm	1310nm on Tx & Rx fibers
Single-Mode	1	8dB/20km*	7707DVIT15-A2KM-USB-W	-1dBm	7707DVIR13-A2KM-USB-W	-17dBm	1310nm/1550nm WDM bi-directional, one fiber
Single-Mode	1 (CWDM)	15.5dB/60km**	7707DVITxx-A2KM-USB-F2	0dBm	7707DVIRxx-A2KM-USB-F2	-19dBm	Different CWDM wavelengths for Tx & Rx, with 8 channel CWDM Mux/Demux**
Single-Mode	1 (DWDM)	21dB/80km***	7707DVITDxxx-A2KM-USB-F2	+7dBm	7707DVIRDxxx-A2KM-USB-F2	-19dBm	Different DWDM wavelengths for Tx & Rx, with 8 channel DWDM Mux/Demux**

*With > 20dB return loss on fiber interface
**Assumes 8 Ch CWDM Mux/Demux loss of 3.5dB
***Assumes 8 Ch DWDM Mux/Demux loss of 5dB

Tx Power/Rx Sensitivity are nominal values ±1dBm
Fiber loss= 0.35/0.25dB per km @ 1310nm/1550nm

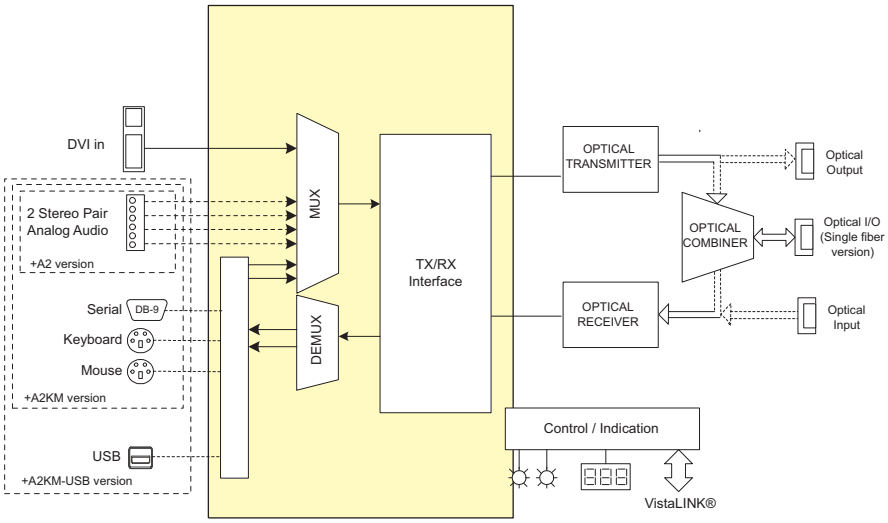

7707DVIT

DVI / KVM Fiber Transmitter

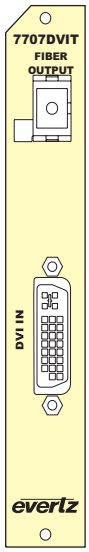

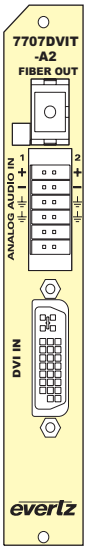

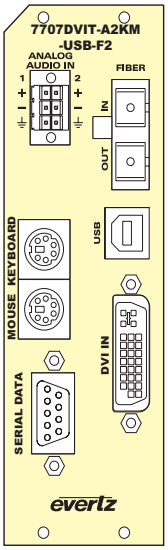

Specifications

Video Input:

Standards:	DVI 1.0
Number of Inputs:	1
Connectors:	28-pin DVI
Video Resolution:	Up to WUXGA (1920x1200) at 75Hz
Color Resolution:	24 bits

Analog Audio Input (A2, A2KM & A2KM-USB versions):

Number of Inputs:	2
Type:	Balanced analog audio
Connector:	Removable terminal block
Impedance:	High Impedance (> 20kΩ)
Frequency Response:	±0.1dB (20Hz to 20kHz)
THD:	< 0.005% (20Hz to 20kHz)
Channel Phase Diff:	< ±1°
SNR:	> 85dB
Max. Input Level:	+24dBu
Signal Quantization:	24 bits

Serial USB, Keyboard/Mouse Input/Output (A2KM & A2KM-USB versions):

Standards:	USB 1.1
Number:	3 (A2KM), 4 (A2KM-USB)
Connector:	DB-9F serial, 1 PS2 for each keyboard & mouse, 1 USB type B (A2KM-USB only)

Optical Output:

Number of Outputs:	1
Connector:	Female SC/PC, ST/PC or FC/PC
Wavelengths:	See Ordering Information
Output Power:	See Application Configuration Chart

Optical Input :

Number of Inputs:	1
Connector:	Female SC/PC, ST/PC, FC/PC
Wavelength:	1270 to 1610nm
Maximum Power:	0dBm
Optical Sensitivity:	See Application Configuration Chart

Electrical:

Voltage:	+12V DC
Power:	11W (Non-DWDM), 14W (DWDM)

Physical:

Number of Slots:	1 (Standard and A2 versions) 2 (A2KM and A2KM-USB versions)

Compliance:

Electrical Safety:	CSA Listed to UL 60065-03, IEC 60065 Complies with CE Low voltage Directive
Laser Safety:	Class 1 laser product Complies with 24 CFR 1040.10 and 1040.11 IEC 60825-1
EMI/RFI:	Complies with FCC Part 15, Class A EU EMC directive

Ordering Information

Fiber Only Versions

7707DVIT13 DVI Fiber Transmitter, 1310nm FP
7707DVIT13-A2 DVI + 2 Analog Audio Fiber Transmitter, 1310nm FP Laser
7707DVIT13-A2KM-F2
DVI +2 Analog Audio + Bi-di Keyboard and Mouse Fiber Transmitter, dual fiber, 1310nm TX & RX
7707DVIT13-A2KM-USB-F2
DVI +2 Analog Audio + Bi-di Keyboard and Mouse + USB Fiber Transmitter, dual fiber, 1310nm TX & RX
7707DVIT15-A2KM-W
DVI +2 Analog Audio + Bi-di Keyboard and Mouse Fiber Transmitter, single fiber, TX on 1550nm, RX on 1310nm
7707DVIT15-A2KM-USB-W
DVI +2 Analog Audio + Bi-di Keyboard and Mouse + USB Fiber Transmitter, single fiber, TX on 1550nm, RX on 1310nm
7707DVITxx DVI Fiber Transmitter, CWDM Laser (Ordering Information)
7707DVITxx-A2 DVI +2 Analog Audio Fiber Transmitter, CWDM Laser (Ordering Information)
7707DVITxx-A2KM-F2
DVI +2 Analog Audio + Bi-di Keyboard and Mouse Fiber Transmitter, dual fiber, CWDM Laser (Ordering Information)
7707DVITxx-A2KM-USB-F2
DVI+2 Analog Audio + Bi-di Keyboard Mouse + USB Fiber Transmitter, dual fiber, CWDM Laser (Ordering Information)
7707DVITDxxx DVI Fiber Transmitter, DWDM Laser (Ordering Information)
7707DVITDxxx-A2 DVI +2 Analog Audio Fiber Transmitter, DWDM Laser (Ordering Information)
7707DVITDxxx-A2KM-F2
DVI +2 Analog Audio + Bi-di Keyboard and Mouse Fiber Transmitter, dual fiber, DWDM Laser (Ordering Information)
7707DVITDxxx-A2KM-USB-F2
DVI +2 Analog Audio + Bi-di Keyboard Mouse + USB Fiber Transmitter, dual fiber, DWDM Laser (Ordering Information)

Ordering Options
Rear Plate and Fiber Connector must be specified at time of order
Eg: Model +SC +3RU

Rear Plate Suffix

+3RU	3RU rear plate for use with 7700FR-C Multiframe
+1RU	1RU rear plate for use with 7701FR Multiframe
+SA	Standalone Enclosure Rear Plate

Connector Suffix

+SC	SC/PC
+ST	ST/PC
+FC	FC/PC

Enclosures

7700FR-C	3RU Multiframe which holds up to 15 single slot modules
7701FR	1RU Multiframe which holds up to 3 single or dual slot modules
S7701FR	Standalone enclosure

7707DVIR

DVI / KVM Fiber Receiver

The 7707DVIR is a VistaLINK® SNMP capable DVI/KVM receiver for high resolution/high quality video signals. Available in fiber optic versions, this single card module accepts an input from the companion 7707DVIT DVI/KVM Transmitter and outputs digital DVI video. The 7707DVIR is also available with analog audio, keyboard + mouse, serial and USB options.

The 7707DVIR occupies one card slot (two card slots for the A2KM and A2KM-USB versions) and can be housed in a 1RU frame which will hold up to 3 modules, a 3RU frame which will hold up to 15 modules or a standalone enclosure which will hold 1 module.

Features & Benefits

- VESA video resolutions supported up to WUXGA
- Full 24 bits per pixel color resolution
- Ideal for use with high resolution LCD, plasma, and projection screens
- Superior digital data transmission
- Comprehensive signal and card status monitoring via four digit card edge display or remotely through SNMP and VistaLINK®
- VistaLINK® capability is available when modules are used with the 3RU 7700FR-C frame and a 7700FC VistaLINK® Frame Controller module in slot 1 of the frame
- Fully hot-swappable from front of frame with no fiber disconnect/re-connect required
- Supports single-mode and multi-mode fiber optic cable
- Accepts any wavelength in the 1270nm to 1610nm range
- Optional 2 channel stereo analog audio
- Optional keyboard, mouse and serial
- Optional USB interface

7707DVIR Application Configurations

FIBER TYPE	FIBERS	OPTICAL/LINK BUDGET	TRANSMIT SIDE		RECEIVE SIDE		DESCRIPTION
			ORDERING PRODUCT INFO	TX POWER	ORDERING PRODUCT INFO	RX SENSITIVITY	
Multi-Mode	2	< 500m	7707DVIT13-A2KM-USB-F2	-7dBm	7707DVIR13-A2KM-USB-F2	-19dBm	1310nm on Tx & Rx fibers
Single-Mode	2	12dB/34km	7707DVIT13-A2KM-USB-F2	-7dBm	7707DVIR13-A2KM-USB-F2	-19dBm	1310nm on Tx & Rx fibers
Single-Mode	1	8dB/20km*	7707DVIT15-A2KM-USB-W	-1dBm	7707DVIR13-A2KM-USB-W	-17dBm	1310nm/1550nm WDM bi-directional, one fiber
Single-Mode	1 (CWDM)	15.5dB/60km**	7707DVITxx-A2KM-USB-F2	0dBm	7707DVIRxx-A2KM-USB-F2	-19dBm	Different CWDM wavelengths for Tx & Rx, with 8 channel CWDM Mux/Demux**
Single-Mode	1 (DWDM)	21dB/80km***	7707DVITDxxx-A2KM-USB-F2	+7dBm	7707DVIRDxxx-A2KM-USB-F2	-19dBm	Different DWDM wavelengths for Tx & Rx, with 8 channel DWDM Mux/Demux**

* With > 20dB return loss on fiber interface
**Assumes 8 Ch CWDM Mux/Demux loss of 3.5dB
***Assumes 8 Ch DWDM Mux/Demux loss of 5dB

Tx Power/Rx Sensitivity are nominal values ±1dBm
Fiber loss= 0.35/0.25dB per km @ 1310nm/1550nm

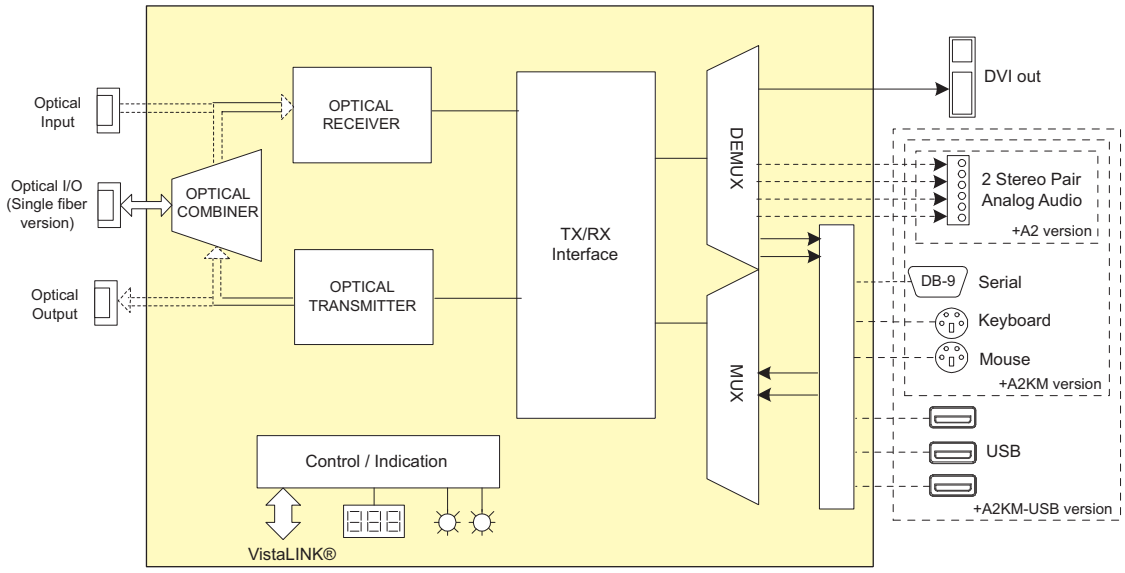

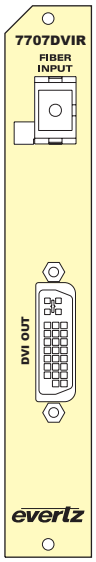

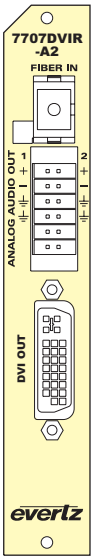

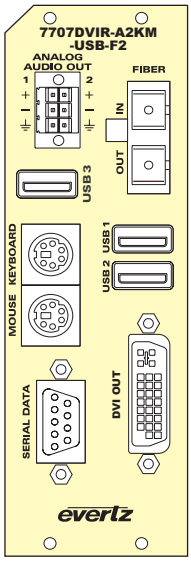

Specifications

Video Output:
Standards: DVI 1.0
Number of Outputs: 1
Connectors: 28-pin DVI
Video Resolution: Up to WUXGA (1920x1200) at 75Hz
Color Resolution: 24 bits

Analog Audio Output (A2, A2KM & A2KM-USB versions):
Number of Outputs: 2
Type: Balanced analog audio
Connector: Removable terminal block
Impedance High Impedance (> 20kΩ)
Frequency Response: ±0.1dB (20Hz to 20kHz)
THD: < 0.005% (20Hz to 20kHz)
Channel Phase Diff: < ±1°
SNR: > 85dB
Level: -20dB to +3dB
Max. Output Level: +24dBu into 10kΩ loads

Serial, USB, Keyboard/Mouse Input/Output (A2KM & A2KM-USB versions):
Standards: USB 1.1
Number: 3 (A2KM), 6 (A2KM-USB)
Connector: 1 DB-9M serial, 1 PS2 for each keyboard & mouse
3 USB type A (A2KM-USB only)

Optical Input:
Number of Outputs: 1
Connector: Female SC/PC, ST/PC or FC/PC
Operating Wavelength: 1270nm-1610nm
Max Input Power: 0dBm
Optical Sensitivity: See Application Configuration chart

Optical Output:
Number of Inputs: 1
Connector: Female SC/PC, ST/PC, FC/PC
Wavelengths: See Ordering Information
Power: See Application Configuration Chart

Electrical:
Voltage: +12 V DC
Power: 11W (Non-DWDM), 14W (DWDM)

Physical:
Number of Slots: 1 (Standard and A2 versions)
2 (A2KM and A2KM-USB versions)

Compliance:
Electrical Safety: CSA Listed to UL 60065-03, IEC 60065
Complies with CE Low voltage Directive
Laser Safety: Class 1 laser product
Complies with 24 CFR 1040.10 and 1040.11
IEC 60825-1
EMI/RFI: Complies with FCC Part 15, Class A
EU EMC directive

Ordering Information

7707DVIR	DVI Fiber Receiver
7707DVIR-A2	DVI + 2 Analog Audio Fiber Receiver
7707DVIR13-A2KM-F2	DVI/KVM + 2 Analog Audio + Bi-di Keyboard and Mouse Fiber Receiver, dual fiber, 1310nm TX & RX
7707DVIR13-A2KM-USB-F2	DVI/KVM +2 Analog Audio + Bi-di Keyboard and Mouse + USB Fiber Receiver, dual fiber, 1310nm TX & RX
7707DVIR13-A2KM-W	DVI/KVM +2 Analog Audio + Bi-di Keyboard and Mouse Fiber Receiver, single fiber, 1310nm TX, RX on 1550nm
7707DVIR13-A2KM-USB-W	DVI/KVM +2 Analog Audio + Bi-di Keyboard, Mouse and USB Fiber Receiver, single fiber, 1310nm TX, RX on 1550nm

For CWDM, please refer to the end of the fiber section for ordering information

7707DVIRxx-A2KM-F2	DVI/KVM +2 Analog Audio + Bi-di Keyboard and Mouse Fiber Receiver, dual fiber, CWDM Laser
7707DVIRxx-A2KM-USB-F2	DVI/KVM +2 Analog Audio + Bi-di Keyboard, Mouse and USB Fiber Receiver, dual fiber, CWDM Laser

For DWDM, please refer to the end of the fiber section for ordering information

7707DVIRDxxx-A2KM-F2	DVI/KVM +2 Analog Audio + Bi-di Keyboard and Mouse Fiber Receiver, dual fiber, DWDM Laser
7707DVIRDxxx-A2KM-USB-F2	DVI/KVM +2 Analog Audio + Bi-di Keyboard, Mouse and USB Fiber Receiver, dual fiber, DWDM Laser

Ordering Options
Rear Plate and Fiber Connector must be specified at time of order
Eg: Model +SC +3RU

Rear Plate Suffix

+3RU	3RU rear plate for use with 7700FR-C Multiframe
+1RU	1RU rear plate for use with 7701FR Multiframe
+SA	Standalone Enclosure Rear Plate

Connector Suffix

+SC	SC/PC
+ST	ST/PC
+FC	FC/PC

Enclosures

7700FR-C	3RU Multiframe which holds up to 15 single slot modules
7701FR	1RU Multiframe which holds up to 3 single or dual slot modules
S7701FR	Standalone enclosure

7705EO-3

Triple SDI Electrical to Optical Converter, 19.4Mb/s or 143-540Mb/s

Features & Benefits

- Triple SDI electrical to optical converter for 3 independent channels
- Provides 45 independent channels of optical conversion, in a single 3RU frame
- Supports all SMPTE 259M standards with operation from 143Mb/s-360Mb/s
- Supports additional standards of SMPTE 305M (SDTi), SMPTE 310M (19.4Mb/s), SMPTE 344M (540Mb/s), M2S and DVB-ASI (270Mb/s)
- Supports multi-mode or single-mode fiber
- Fully hot-swappable from front of frame, with no fiber or BNC disconnect/reconnect required
- Occupies one card slot and can be housed in either a 1RU frame which will hold up to 3 modules or a 3RU frame which will hold up to 15 modules or a standalone frame which will hold 1 module
- VistaLINK® capability is available when modules are used with the 3RU 7700FR-C frame and a 7700FC VistaLINK® Frame Controller module in slot 1 of the frame
- Comprehensive signal and card status monitoring via four digit card edge display or remotely through SNMP and VistaLINK®

Inputs
- Three independent serial digital BNC inputs, each providing cable equalization to > 300m @ 270Mb/s (Belden 8281)

Outputs
- Three independent fiber outputs
- Optical output wavelength of 1310nm
- SC/PC, ST/PC, FC/PC connector options

Status LEDs
- Signal presence indication for each channel
- Laser status indication for each channel
- Module status indication

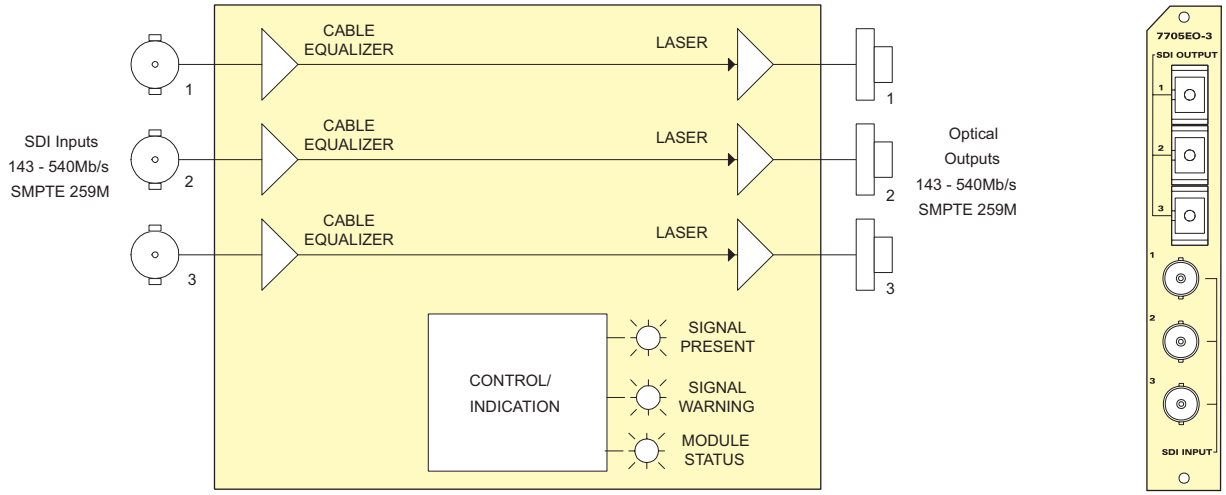

Specifications

Standards: SMPTE 259M A, B, C, D, SMPTE 297M, SMPTE 305M, SMPTE 310M, SMPTE344M, M2S, DVB-ASI

Serial Video Input:
Number of Inputs: 3 (independent channels)
Connector: 3 BNC inputs per IEC 169-8
Equalization: Automatic to 300m @ 270Mb/s, with Belden 8281 (or equivalent)
Return Loss: > 15dB up to 540Mb/s

Optical Outputs:
Number of Outputs: 3 (independent channels)
Connector: SC/PC, ST/PC, FC/PC female housing
Return Loss: > 14dB
Rise/Fall Time: 400-700ps
Jitter: < 0.2 UI
Nominal Wavelength: 1310nm
Optical Power: -7dBm ±1dBm

Electrical:
Voltage: +12V DC
Power: 6W

Physical:
Number of Slots: 1

Compliance:
Electrical Safety: CSA Listed to UL 60065-03, IEC 60065
Complies with CE Low voltage Directive
Laser Safety: Class 1 laser product
Complies with 24 CFR 1040.10 and 1040.11
IEC 60825-1
EMI/RFI: Complies with FCC Part 15, Class A
EU EMC directive

Ordering Information

7705EO13-3 Triple SDI Electrical to Optical Converter, 19.4Mb/s or 143-540Mb/s, 1310nm, FP laser

Ordering Options Rear Plate and Fiber Connector must be specified at time of order
Eg. Model +3RU +SC

Rear Plate Suffix
+3RU 3RU Rear Plate for use with 7700FR-C Multiframe
+1RU 1RU Rear Plate for use with 7701FR Multiframe
+SA Standalone Enclosure Rear Plate

Connector Suffix
+SC SC/PC
+ST ST/PC
+FC FC/PC

Fiber Optic Patch Cable
CB-FP1M-SCPC Single mode fiber cable, 1m, SC/PC male termination
CB-FP1M-STPC Single mode fiber cable, 1m, ST/PC male termination
CB-FP5M-SCPC Single mode fiber cable, 5m, SC/PC male termination
CB-FP5M-STPC Single mode fiber cable, 5m, ST/PC male termination
CB-FP10M-SCPC Single mode fiber cable, 10m, SC/PC male termination
CB-FP10M-STPC Single mode fiber cable, 10m, ST/PC male termination

Enclosures
7700FR-C 3RU Multiframe, which holds up to 15 single slot modules
7701FR 1RU Multiframe, which holds up to 3single or dual slot modules
S7701FR Standalone enclosure

Features & Benefits

- Triple SDI optical to electrical converter for 3 independent channels
- Provides 45 independent channels of optical conversion, in a single 3RU frame
- Supports all SMPTE 259M standards with operation from 143Mb/s-360Mb/s
- Supports additional standards of SMPTE 305M (SDTi), SMPTE 310M (19.4Mb/s), SMPTE 344M (540Mb/s), M2S and DVB-ASI (270Mb/s)
- Supports multi-mode or single-mode fiber
- Fully hot-swappable from front of frame, with no fiber or BNC disconnect/reconnect required
- Occupies one card slot and can be housed in either a 1RU frame which will hold up to 3 modules or a 3RU frame which will hold up to 15 modules or a standalone frame which will hold 1 module
- VistaLINK® capability is available when modules are used with the 3RU 7700FR-C frame and a 7700FC VistaLINK® Frame Controller module in slot 1 of the frame
- Comprehensive signal and card status monitoring via four digit card edge display or remotely through SNMP and VistaLINK®

Inputs
- Three independent fiber inputs
- 1270nm to 1610nm input wavelength range
- Input sensitivity to -32dBm
- SC/PC, ST/PC, FC/PC connector options

Outputs
- Three independent, reclocked, serial digital BNC outputs
- Wideband jitter < 0.2 UI

Status LEDs
- Signal presence indication for each channel
- Input carrier weak indication for each channel
- Module status indication

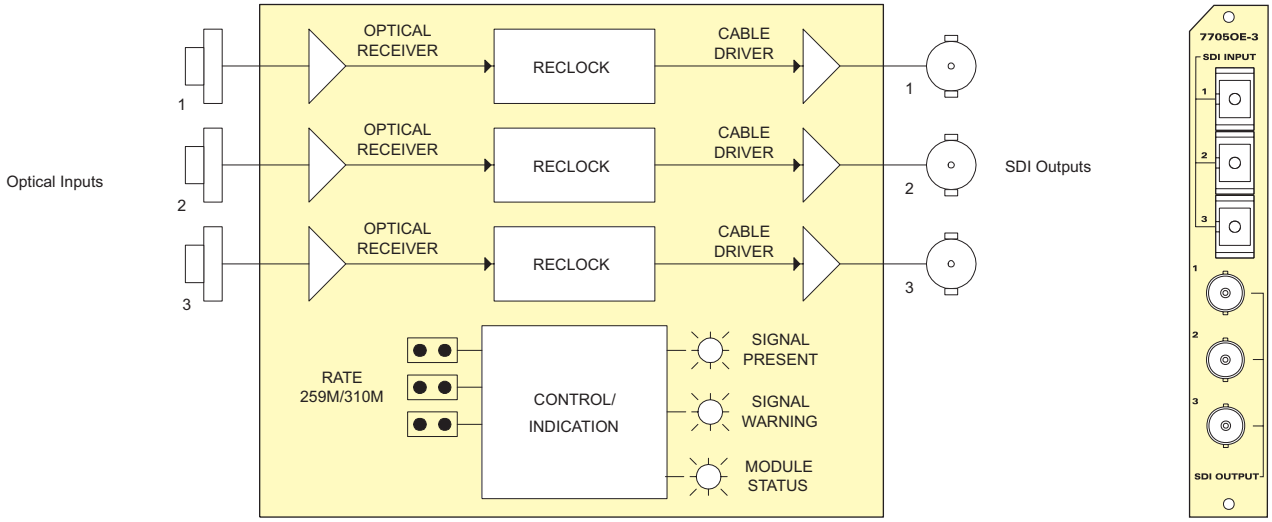

Specifications

Standards: SMPTE 259M A, B, C, D, SMPTE 297M, SMPTE 305M, SMPTE 310M, SMPTE344M, M2S, DVB-ASI

Optical Inputs:
Number of Inputs: 3 (independent channels)
Connector: SC/PC, ST/PC, FC/PC female housing
Operating Wavelength: 1270nm to 1610nm
Max. Input Power: 0dBm
Optical Sensitivity: -32dBm

Serial Video Outputs:
Number of Outputs: 3 reclocked (independent channels)
Connector: 3 (1 per input channel) reclocked
Signal Level: 800mV nominal
DC Offset: 0V ±0.5V
Rise/Fall Time: 900ps nominal
Overshoot: < 10% of amplitude
Return Loss: > 15dB up to 540Mb/s
Jitter: < 0.2 UI

Electrical:
Voltage: +12V DC
Power: 6W
EMI/RFI: Complies with FCC Part 15, Class A EU EMC Directive

Physical:
Number of Slots: 1

Ordering Information

7705OE-3 Triple SDI Optical to Electrical Converter 19.4Mb/s or 143-540Mb/s

Ordering Options Rear Plate and Fiber Connector must be specified at time of order
Eg. Model +3RU +SC

Rear Plate Suffix
+3RU 3RU Rear Plate for use with 7700FR-C Multiframe
+1RU 1RU Rear Plate for use with 7701FR Multiframe
+SA Standalone Enclosure Rear Plate

Connector Suffix
+SC SC/PC
+ST ST/PC
+FC FC/PC

Fiber Optic Patch Cable
CB-FP1M-SCPC Single mode fiber cable, 1m, SC/PC male termination
CB-FP1M-STPC Single mode fiber cable, 1m, ST/PC male termination
CB-FP5M-SCPC Single mode fiber cable, 5m, SC/PC male termination
CB-FP5M-STPC Single mode fiber cable, 5m, ST/PC male termination
CB-FP10M-SCPC Single mode fiber cable, 10m, SC/PC male termination
CB-FP10M-STPC Single mode fiber cable, 10m, ST/PC male termination

Enclosures
7700FR-C 3RU Multiframe, which holds up to 15 single slot modules
7701FR 1RU Multiframe, which holds up to 3single or dual slot modules
S7701FR Standalone enclosure

7705EO

SDI Electrical to Optical Converter, 19.4Mb/s or 143-540Mb/s

Features & Benefits

- Electrical to optical converter for all SMPTE 259M standards with operation from 143Mb/s-360Mb/s
- Supports additional standards of SMPTE 305M (SDTi) SMPTE 310M (19.4Mb/s), SMPTE 344M (540Mb/s), M2S and DVB-ASI (270Mb/s)
- Compatible with multi-mode or single-mode fiber
- Fully hot-swappable from front of frame with no fiber or BNC disconnect/reconnect required
- Occupies one card slot and can be housed in either a 1RU frame which will hold up to three modules, a 3RU frame which will hold up to 15 modules or a standalone frame which will hold 1 module
- VistaLINK® capability is available when modules are used with the 3RU 7700FR-C frame and a 7700FC VistaLINK® Frame Controller module in slot 1 of the frame
- Comprehensive signal and card status monitoring via four digit card edge display or remotely through SNMP and VistaLINK®

Input
- Automatic input cable equalization to > 300m @ 270Mb/s (Belden 8281)

Outputs
- Two reclocked serial digital BNC outputs for loop-through or monitoring
- One reclocked fiber output available in 1310nm or 1550nm
- Wideband Jitter < 0.2 UI
- SC/PC, ST/PC, FC/PC connector options

Status LEDs
- Signal presence indication
- Maximum equalization warning indication
- Module status indication

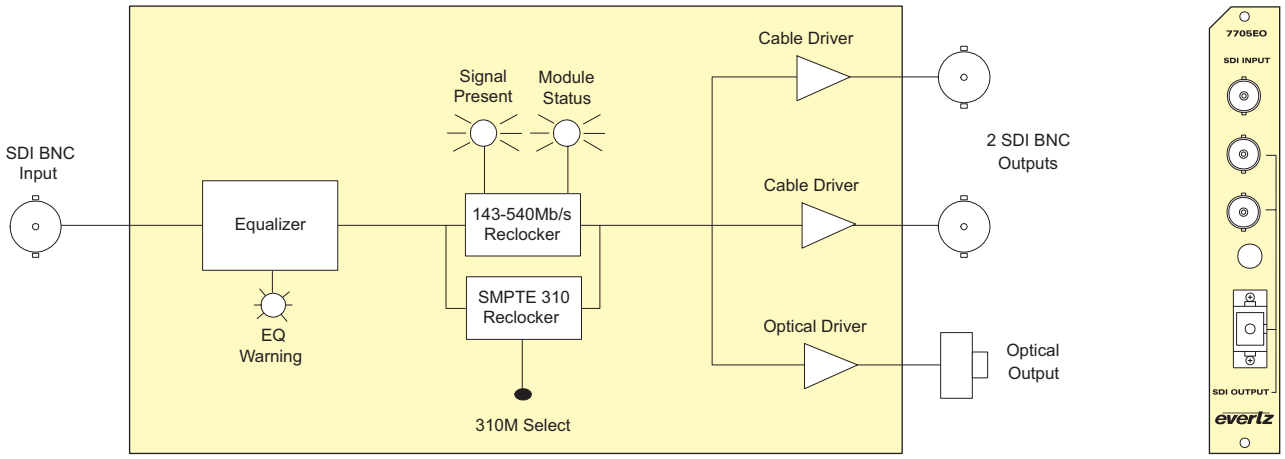

Specifications

Standards: SMPTE 259M A, B, C, D, SMPTE 297M, SMPTE 305M, SMPTE 310M, SMPTE 344M, M2S, DVB-ASI

Serial Video Input:
Connector: 1 BNC per IEC 60169-8 Amendment 2
Equalization: Automatic to 300m @ 270Mb/s with Belden 8281 (or equivalent)
Return Loss: > 15dB up to 540Mb/s

Serial Video Outputs:
Number of Outputs: 2 per card-reclocked
Connector: BNC per IEC 60169-8 Amendment 2
Signal Level: 800mV nominal
DC Offset: 0V ±0.5V
Rise and Fall Time: 900ps nominal
Overshoot: < 10% of amplitude
Return Loss: > 15dB up to 540Mb/s
Wideband Jitter: < 0.2 UI

Optical Outputs:
Number of Outputs: 1
Connector: SC/PC, ST/PC, FC/PC female housing
Return Loss: > 14dB
Wavelength: 1310nm, 1550nm

Optical Power:
1310nm FP: -7dBm ±1dBm
1550nm DFB: 0dBm ±1dBm

Electrical:
Voltage: +12V DC
Power: 6W

Physical:
Number of Slots: 1

Compliance:
Electrical Safety: CSA Listed to UL 60065-03, IEC 60065
Complies with CE Low voltage Directive
Laser Safety: Class 1 laser product
Complies with 24 CFR 1040.10 and 1040.11
IEC 60825-1
EMI/RFI: Complies with FCC Part 15, Class A
EU EMC directive

Ordering Information

7705EO13	SDI Electrical to Optical Converter, 19.4Mb/s or 143-540Mb/s, 1310nm, FP Laser
7705EO15	SDI Electrical to Optical Converter, 19.4Mb/s or 143-540Mb/s, 1550nm, DFB Laser

Ordering Options Rear Plate and Fiber Connector must be specified at time of order
Eg: Model +SC +3RU

Rear Plate Suffix
+3RU 3RU Rear Plate for use with 7700FR-C Multiframe
+1RU 1RU Rear Plate for use with 7701FR Multiframe
+SA Standalone Enclosure Rear Plate

Connector Suffix
+SC SC/PC
+ST ST/PC
+FC FC/PC

Enclosures
7700FR-C 3RU Multiframe which holds up to 15 single slot modules
7701FR 1RU Multiframe which holds up to 3 single or dual slot modules
S7701FR Standalone enclosure

Features & Benefits

- Optical to electrical converter for all SMPTE 259M standards with operation from 143Mb/s-360Mb/s
- Supports additional standards of SMPTE 305M (SDTi), SMPTE 310M (19.4Mb/s), SMPTE 344M (540Mb/s), M2S and DVB-ASI (270Mb/s)
- Supports multi-mode or single-mode fiber
- Fully hot-swappable from front of frame with no fiber or BNC disconnect/reconnect required
- Occupies one card slot and can be housed in either a 1RU frame which will hold up to three modules or a 3RU frame which will hold up to 15 modules or a standalone frame which will hold 1 module
- VistaLINK® capability is available when modules are used with the 3RU 7700FR-C frame and a 7700FC VistaLINK® Frame Controller module in slot 1 of the frame
- Comprehensive signal and card status monitoring via four digit card edge display or remotely through SNMP and VistaLINK®

Input
- Optical input range from 1270nm to 1610nm
- Input sensitivity to -32dBm
- SC/PC, ST/PC, FC/PC connector options

Outputs
- Three serial digital BNC outputs for loop-through or monitoring
- Wideband Jitter < 0.2 UI

Status LEDs
- Signal presence indication
- Module status indication

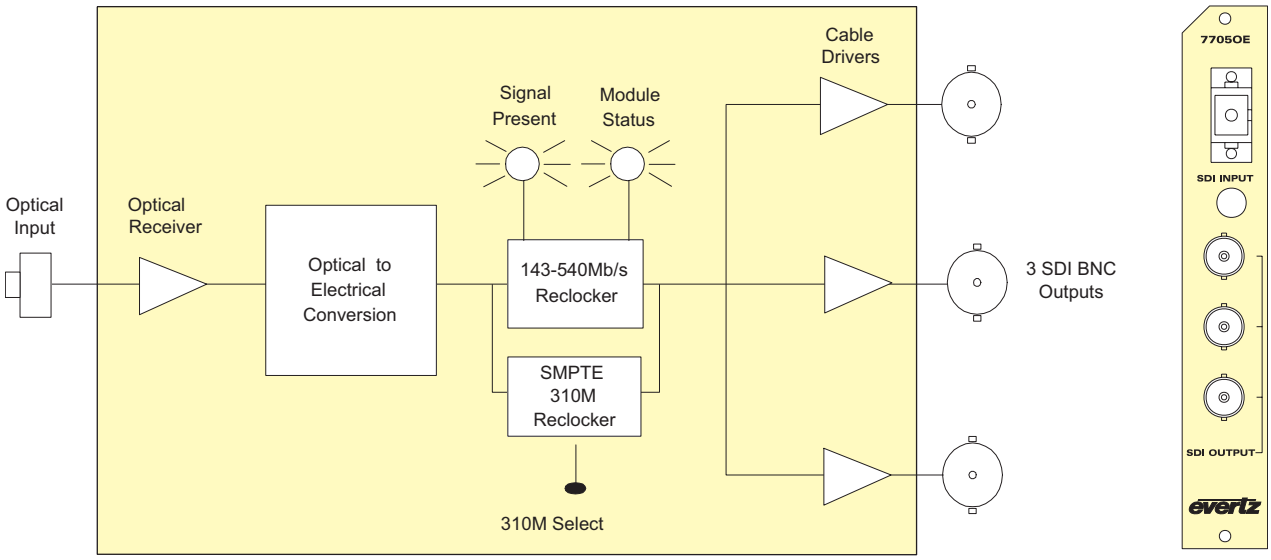

Specifications

Standards: SMPTE 259M A, B, C, D, SMPTE 297M, SMPTE 305M, SMPTE 310M, SMPTE 344M, M2S, DVB-ASI

Optical Input:
Number of Inputs: 1
Connector: SC/PC, ST/PC, FC/PC Female Housing
Operating Wavelength: 1270nm to 1610nm
Optical Sensitivity: -32dBm
Max. Input Power: 0dBm

Serial Video Outputs:
Number of Outputs: 3 per card reclocked
Connector: BNC per IEC 60169-8 Amendment 2
Signal Level: 800mV nominal
DC Offset: 0V ±0.5V
Rise and Fall Time: 900ps nominal
Overshoot: < 10% of amplitude
Return Loss: > 15dB up to 540Mb/s
Wideband Jitter: < 0.2 UI

Electrical:
Voltage: +12V DC
Power: 6W
EMI/RFI: Complies with FCC Part 15, Class A EU EMC Directive

Physical:
Number of Slots: 1

Ordering Information

7705OE SDI Optical to Electrical Converter, 19.4Mb/s or 143-540Mb/s

Ordering Options Rear Plate and Fiber Connector must be specified at time of order
Eg: Model +SC +3RU

Rear Plate Suffix
+3RU 3RU Rear Plate for use with 7700FR-C Multiframe
+1RU 1RU Rear Plate for use with 7701FR Multiframe
+SA Standalone Enclosure Rear Plate

Connector Suffix
+SC SC/PC
+ST ST/PC
+FC FC/PC

Fiber Optic Patch Cable
CB-FP1M-SCPC Single mode fiber cable, 1m, SC/PC male termination
CB-FP1M-STPC Single mode fiber cable, 1m, ST/PC male termination
CB-FP5M-SCPC Single mode fiber cable, 5m, SC/PC male termination
CB-FP5M-STPC Single mode fiber cable, 5m, ST/PC male termination
CB-FP10M-SCPC Single mode fiber cable, 10m, SC/PC male termination
CB-FP10M-STPC Single mode fiber cable, 10m, ST/PC male termination

Enclosures
7700FR-C 3RU Multiframe which holds up to 15 single slot modules
7701FR 1RU Multiframe which holds up to 3 single or dual slot modules
S7701FR Standalone enclosure

7707EO-3

Triple SDI Electrical to Optical Converter, 19.4Mb/s or 143-540Mb/s

Features & Benefits

- Triple SDI electrical to optical converter for 3 independent channels
- Provides 45 independent channels of optical conversion, in a single 3RU frame
- Supports all SMPTE 259M standards with operation from 143Mb/s-360Mb/s
- Supports additional standards of SMPTE 305M (SDTi), SMPTE 310M (19.4Mb/s), SMPTE 344M (540Mb/s), M2S and DVB-ASI (270Mb/s)
- Supports multi-mode or single-mode fiber
- Fully hot-swappable from front of frame, with no fiber or BNC disconnect/reconnect required
- Occupies one card slot and can be housed in either a 1RU frame which will hold up to 3 modules or a 3RU frame which will hold up to 15 modules or a standalone frame which will hold 1 module
- VistaLINK® capability is available when modules are used with the 3RU 7700FR-C frame and a 7700FC VistaLINK® Frame Controller module in slot 1 of the frame
- Comprehensive signal and card status monitoring via four digit card edge display or remotely through SNMP and VistaLINK®

Inputs
- Three independent serial digital BNC inputs, each providing cable equalization to > 300m @ 270Mb/s (Belden 8281)

Outputs
- Three independent fiber outputs
- Optical output wavelength of 1310nm
- SC/PC, ST/PC, FC/PC connector options

Status LEDs
- Signal presence indication for each channel
- Laser status indication for each channel
- Module status indication

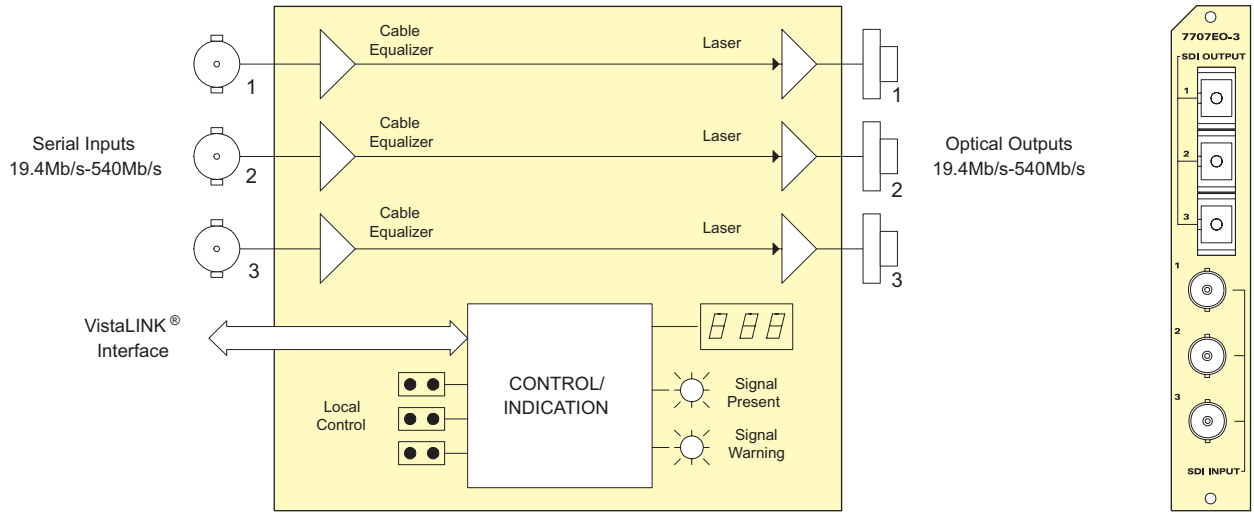

Specifications

Standards: SMPTE 259M A, B, C, D, SMPTE 297M, SMPTE 305M, SMPTE 310M, SMPTE344M, M2S, DVB-ASI

Serial Video Input:
Number of Inputs: 3 (independent channels)
Connector: 3 BNC inputs per IEC 169-8
Equalization: Automatic to 300m @ 270Mb/s, with Belden 8281 (or equivalent)
Return Loss: > 15dB up to 540Mb/s

Optical Outputs:
Number of Outputs: 3 (independent channels)
Connector: SC/PC, ST/PC, FC/PC female housing
Return Loss: > 14dB
Rise/Fall Time: 400-700ps
Jitter: < 0.2 UI
Nominal Wavelength: 1310nm
Optical Power: -7dBm ±1dBm

Electrical:
Voltage: +12V DC
Power: 7W

Physical:
Number of Slots: 1

Compliance:
Electrical Safety: CSA Listed to UL 60065-03, IEC 60065
Complies with CE Low voltage Directive
Laser Safety: Class 1 laser product
Complies with 24 CFR 1040.10 and 1040.11
IEC 60825-1
EMI/RFI: Complies with FCC Part 15, Class A
EU EMC directive

Ordering Information

7707EO13-3 Triple SDI Optical to Electrical Converter, 19.4Mb/s or 143-540Mb/s, 1310nm, FP laser VistaLINK® Monitoring

Ordering Options Rear Plate and Fiber Connector must be specified at time of order
Eg. Model +3RU +SC

Rear Plate Suffix
+3RU 3RU Rear Plate for use with 7700FR-C Multiframe
+1RU 1RU Rear Plate for use with 7701FR Multiframe
+SA Standalone Enclosure Rear Plate

Connector Suffix
+SC SC/PC
+ST ST/PC
+FC FC/PC

Fiber Optic Patch Cable
CB-FP1M-SCPC Single mode fiber cable, 1m, SC/PC male termination
CB-FP1M-STPC Single mode fiber cable, 1m, ST/PC male termination
CB-FP5M-SCPC Single mode fiber cable, 5m, SC/PC male termination
CB-FP5M-STPC Single mode fiber cable, 5m, ST/PC male termination
CB-FP10M-SCPC Single mode fiber cable, 10m, SC/PC male termination
CB-FP10M-STPC Single mode fiber cable, 10m, ST/PC male termination

Enclosures
7700FR-C 3RU Multiframe, which holds up to 15 single slot modules
7701FR 1RU Multiframe, which holds up to 3 single or dual slot modules
S7701FR Standalone enclosure

Features & Benefits

- Triple SDI optical to electrical converter for 3 independent channels
- Provides 45 independent channels of optical conversion, in a single 3RU frame
- Supports all SMPTE 259M standards with operation from 143Mb/s-360Mb/s
- Supports additional standards of SMPTE 305M (SDTi), SMPTE 310M (19.4Mb/s), SMPTE 344M (540Mb/s), M2S and DVB-ASI (270Mb/s)
- Supports multi-mode or single-mode fiber
- Fully hot-swappable from front of frame, with no fiber or BNC disconnect/reconnect required
- Occupies one card slot and can be housed in either a 1RU frame which will hold up to 3 modules or a 3RU frame which will hold up to 15 modules or standalone frame which will hold 1 module
- VistaLINK® capability is available when modules are used with the 3RU 7700FR-C frame and a 7700FC VistaLINK® Frame Controller module in slot 1 of the frame
- Comprehensive signal and card status monitoring via four digit card edge display or remotely through SNMP and VistaLINK®

Inputs
- Three independent fiber inputs
- 1270nm to 1610nm input wavelength range
- Input sensitivity to -30dBm
- SC/PC, ST/PC, FC/PC connector options

Outputs
- Three independent, reclocked, serial digital BNC outputs

Status LEDs
- Signal presence indication for each channel
- Input carrier weak indication for each channel
- Module status indication

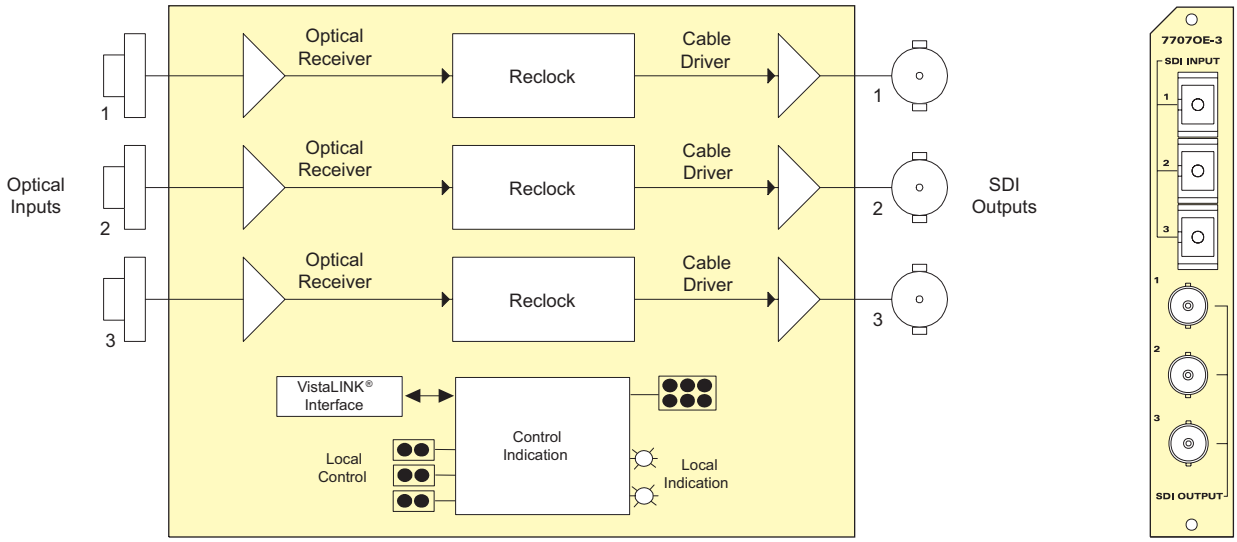

Specifications

Standards: SMPTE 259M A, B, C, D, SMPTE 297M, SMPTE 305M, SMPTE 310M, SMPTE344M, M2S, DVB-ASI

Optical Inputs:
Number of Inputs: 3 (independent channels)
Connector: SC/PC, ST/PC, FC/PC female housing
Operating Wavelength: 1270nm to 1610nm
Max. Input Power: 0dBm
Optical Sensitivity: -30dBm

Serial Video Outputs:
Number of Outputs: 3 reclocked (independent channels)
Connector: 3 BNC inputs per IEC 169-8
Signal Level: 800mV nominal
DC Offset: 0V ±0.5V
Rise/Fall Time: 900ps nominal
Overshoot: < 10% of amplitude
Return Loss: > 15dB up to 540Mb/s
Jitter: < 0.2 UI

Electrical:
Voltage: +12V DC
Power: 7W
EMI/RFI: Complies with FCC Part 15, Class A EU EMC Directive

Physical:
Number of Slots: 1

Ordering Information

7707OE-3 Triple SDI Optical to Electrical Converter 19.4Mb/s or 143-540Mb/s, VistaLINK® Monitoring

Ordering Options Rear Plate and Fiber Connector must be specified at time of order Eg. Model +3RU +SC

Rear Plate Suffix
+3RU 3RU Rear Plate for use with 7700FR-C Multiframe
+1RU 1RU Rear Plate for use with 7701FR Multiframe
+SA Standalone Enclosure Rear Plate

Connector Suffix
+SC SC/PC
+ST ST/PC
+FC FC/PC

Fiber Optic Patch Cable
CB-FP1M-SCPC Single mode fiber cable, 1m, SC/PC male termination
CB-FP1M-STPC Single mode fiber cable, 1m, ST/PC male termination
CB-FP5M-SCPC Single mode fiber cable, 5m, SC/PC male termination
CB-FP5M-STPC Single mode fiber cable, 5m, ST/PC male termination
CB-FP10M-SCPC Single mode fiber cable, 10m, SC/PC male termination
CB-FP10M-STPC Single mode fiber cable, 10m, ST/PC male termination

Enclosures
7700FR-C 3RU Multiframe, which holds up to 15 single slot modules
7701FR 1RU Multiframe, which holds up to 3 single or dual slot modules
S7701FR Standalone enclosure

7707EO

SDI Electrical to Optical Converter, 19.4Mb/s or 143-540Mb/s

Features & Benefits

- Electrical to optical converter for all SMPTE 259M standards with operation from 143Mb/s-360Mb/s
- Supports SMPTE 310M (19.4Mb/s), M2S, DVB-ASI (270Mb/s), SMPTE 344M (540Mb/s) and SMPTE 305M (SDTi) rates
- Detection and display of input equalization, video format and EDH errors
- Automatic coaxial input equalization up to 275m at 270Mb/s (Belden 8281)
- Reclocked optical and electrical outputs
- Optical output wavelengths of 1310nm, 1550nm and up to sixteen CWDM wavelengths (ITU-T G.694.2 compliant)
- DWDM wavelengths (ITU-T G.694.1 compliant) also available
- Supports multi-mode and single-mode fiber
- Fully hot-swappable from front of frame
- Occupies one card slot and can be housed in either a 1RU frame which will hold up to three modules, a 3RU frame which will hold up to 15 modules, or a standalone enclosure which will hold one module
- Comprehensive signal and card status monitoring via four digit card edge display or remotely through SNMP and VistaLINK®
- VistaLINK® capability is available when modules are used with the 3RU 7700FR-C frame and a 7700FC VistaLINK® Frame Controller module in slot 1 of the frame

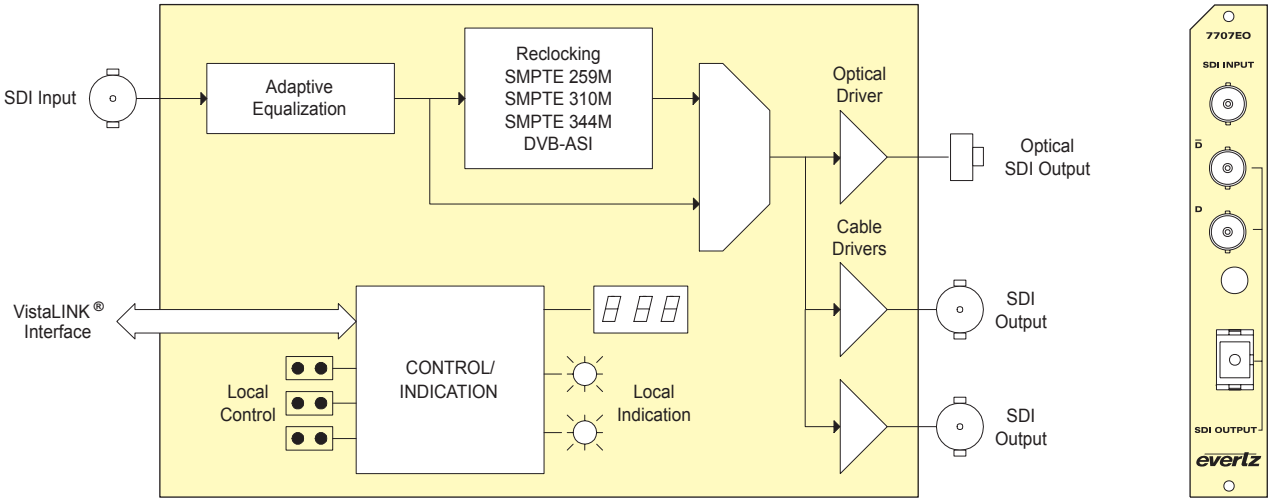

Specifications

Standards:

Reclocked:	SMPTE 259M A, B, C, D, SMPTE 297M, SMPTE 344M, SMPTE 310M, SMPTE 305M, M2S or DVB-ASI
Non-Reclocked:	Any bi-level signal type at rates of 19.4-540Mb/s

Serial Video Input:

Connector:	1 BNC per IEC 60169-8 Amendment 2
Equalization:	Automatic up to 275m @ 270Mb/s with Belden 8281 (or equivalent cable)
Return Loss:	> 15dB up to 540Mb/s

Serial Video Output:

Number of Outputs:	2 per card (1 output DVB-ASI/M2S compliant)
Connectors:	BNC per IEC 60169-8 Amendment 2
Signal Level:	800mV nominal
DC Offset:	0V ±0.5V
Rise and Fall Time:	900ps nominal
Overshoot:	< 10% of amplitude
Return Loss:	> 15dB up to 270Mb/s
Wide Band Jitter:	< 0.2 UI

Optical Output:

Standard:	SMPTE 297M
Connector:	1 Female SC/PC, ST/PC or FC/PC
Return Loss:	> 14dB
Rise and Fall Time:	400-700ps
Wide Band Jitter:	< 0.2 UI
Wavelengths:	See Ordering Information
Output Power:	
1310nm FP:	-7dBm ±1dBm
1550nm & CWDM:	0dBm ±1dBm
DWDM DFB:	7dBm ±1dBm

Electrical:

Voltage:	+12V DC
Power:	6W (Non-DWDM), 9W (DWDM)

Physical:

Number of slots:	1

Compliance:

Electrical Safety:	CSA Listed to UL 60065-03, IEC 60065 Complies with CE Low voltage Directive
Laser Safety:	Class 1 laser product Complies with 24 CFR 1040.10 and 1040.11 IEC 60825-1
EMI/RFI:	Complies with FCC Part 15, Class A EU EMC directive

Ordering Information

7707EO13	SDI Electrical to Optical Converter 19.4Mb/s or 143-540Mb/s, 1310nm, FP Laser
7707EO15	SDI Electrical to Optical Converter 19.4Mb/s or 143-540Mb/s, 1550nm, DFB Laser

For CWDM, please refer to the end of the fiber section for ordering information

7707EOxx	SDI Electrical to Optical Converter 19.4Mb/s or 143-540Mb/s, CWDM DFB Laser

For DWDM, please refer to the end of the fiber section for ordering information

7707EODxxx	SDI Electrical to Optical Converter, 19.4Mb/s or 143-540Mb/s, DWDM Laser, +7dBm

Ordering Options	Rear Plate and Fiber Connector must be specified at time of order Eg: Model +SC +3RU

Rear Plate Suffix

+3RU	3RU Rear Plate for use with 7700FR-C Multiframe
+1RU	1RU Rear Plate for use with 7701FR Multiframe
+SA	Standalone Enclosure Rear Plate

Connector Suffix

+SC	SC/PC
+ST	ST/PC
+FC	FC/PC

Enclosures

7700FR-C	3RU Multiframe which holds up to 15 single slot modules
7701FR	1RU Multiframe which holds up to 3 single or dual slot modules
S7701FR	Standalone Enclosure

Features & Benefits

- Optical to electrical converter for all SMPTE 259M standards with operation from 143Mb/s-360Mb/s
- Supports SMPTE 310M (19.4Mb/s), M2S, DVB-ASI (270Mb/s), SMPTE 344M (540Mb/s) and SMPTE 305M (SDTi) rates
- Detection and display of optical input power, video format and EDH errors
- Reclocked optical input, with selectable non-reclocked mode
- Wide range optical input (1270nm to 1610nm)
- Supports multi-mode and single-mode fiber
- Redundant second SDI input for automatic failure switching applications
- Automatic input cable equalization to 275m at 270Mb/s (Belden 8281) on coaxial input
- Fully hot-swappable from front of frame
- Occupies one card slot and can be housed in either a 1RU frame which will hold up to three modules, a 3RU frame which will hold up to 15 modules, or a standalone enclosure which will hold 1 module
- Comprehensive signal and card status monitoring via four digit card edge display or remotely through SNMP and VistaLINK®
- VistaLINK® capability is available when modules are used with the 3RU 7700FR-C frame and a 7700FC VistaLINK® Frame Controller module in slot 1 of the frame

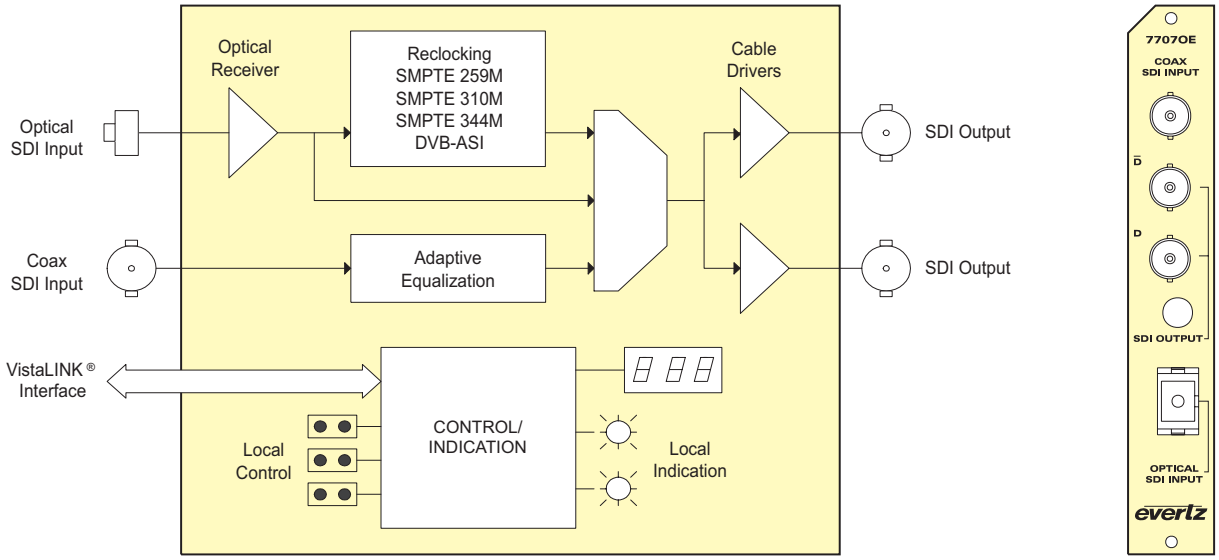

Specifications

Standards:

Reclocked:	SMPTE 259M A, B, C, D, SMPTE 297M, SMPTE 305M, SMPTE 310M, SMPTE 344M, M2S or DVB-ASI
Non-Reclocked:	Any bi-level signal type at rates of 19.4Mb/s to 540Mb/s

Optical Input:

Connector:	1 Female SC/PC, ST/PC or FC/PC
Wavelength:	1270nm to 1610nm
Optical Sensitivity	-32dBm @ 270Mb/s
Max. Input Power:	0dBm

Coaxial Input:

Connector:	1 BNC per IEC 60169-8 Amendment 2
Impedance:	75Ω (nominal)
Equalization:	Automatic to 275m @ 270Mb/s with Belden 8281 cable
Return Loss:	> 15dB to 540Mb/s

Serial Video Outputs:

Number of Outputs:	2 per card (1 output DVB-ASI/M2S compliant)
Connector:	BNC per IEC 60169-8 Amendment 2
Impedance:	75Ω (nominal)
Signal Level:	800mV nominal
DC Offset:	0V ±0.5V
Rise and Fall Time:	900ps nominal
Overshoot:	< 10% of amplitude
Return Loss:	> 15dB up to 540Mb/s
Wide Band Jitter:	< 0.20 UI

Electrical:

Voltage:	+12V DC
Power:	6W
EMI/RFI:	Complies with FCC Part 15, Class A EU EMC Directive

Physical:

Number of slots:	1

Ordering Information

7707OE	SDI Optical to Electrical Converter, 19.4Mb/s or 143-540Mb/s, VistaLINK® Monitoring

Ordering Options Rear Plate and Fiber Connector must be specified at time of order
Eg: Model +SC +3RU

Rear Plate Suffix

+3RU	3RU Rear Plate for use with 7700FR-C Multiframe
+1RU	1RU Rear Plate for use with 7701FR Multiframe
+SA	Standalone Enclosure Rear Plate

Connector Suffix

+SC	SC/PC
+ST	ST/PC
+FC	FC/PC

Fiber Optic Patch Cable

CB-FP1M-SCPC	Single mode fiber cable, 1m, SC/PC male termination
CB-FP1M-STPC	Single mode fiber cable, 1m, ST/PC male termination
CB-FP5M-SCPC	Single mode fiber cable, 5m, SC/PC male termination
CB-FP5M-STPC	Single mode fiber cable, 5m, ST/PC male termination
CB-FP10M-SCPC	Single mode fiber cable, 10m, SC/PC male termination
CB-FP10M-STPC	Single mode fiber cable, 10m, ST/PC male termination

Enclosures

7700FR-C	3RU Multiframe which holds up to 15 single slot modules
7701FR	1RU Multiframe which holds up to 3 single or dual slot modules
S7701FR	Standalone Enclosure

2405EO

SDI Miniature Optical Transmitter

Features & Benefits

- Reclocking for all SDTV video rates including SMPTE 259M (143Mb/s-360Mb/s), SMPTE 310M (19.4Mb/s), SMPTE 344M (540Mb/s), M2S, and DVB-ASI (270Mb/s)
- Available in 1310nm, 1550nm and up to sixteen different CWDM wavelengths (ITU-T G.694.2 compliant)
- Automatic laser shutdown on absence of input signal for extended laser life
- Supports single-mode and multi-mode fiber optic cable
- Immunity to video Pathological signals
- Long reach transmission capability
- Rugged, small form factor enclosure
- Low Power, +12V DC operation

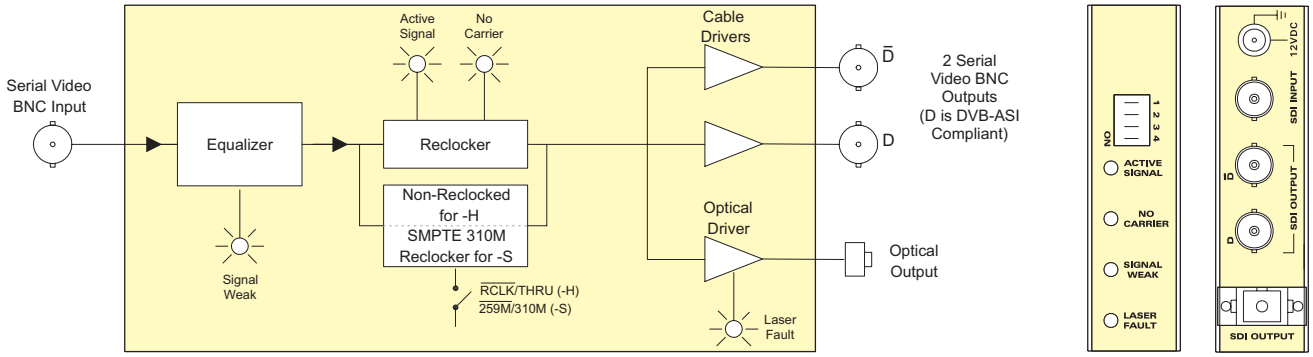

Specifications

Standards : SMPTE 259M (A, B, C, D), SMPTE 297M, SMPTE 310M, SMPTE 344M, M2S, & DVB-ASI

Serial Video BNC Input:

Number of Inputs:	1
Connector:	BNC per IEC 60169-8 Amendment 2
Equalization:	Automatic to 300m @ 270Mb/s with Belden 8281 (or equivalent)
Return Loss:	> 15dB up to 540MHz

Serial Video BNC Output:

Number of Outputs:	2 (1 output DVB-ASI/M2S compliant)
Connector:	BNC per IEC 60169-8 Amendment 2
Signal Level:	800mV nominal
DC Offset:	0V ±0.5V
Rise, Fall Time:	900ps nominal
Overshoot:	< 10% of amplitude
Return Loss:	> 15dB up to 540MHz
Wideband Jitter:	< 0.2 UI

Optical Output:

Number of Outputs:	1
Connector:	SC/PC, ST/PC, FC/PC Female
Return Loss:	> 14dB
Rise, Fall Time:	400-700ps
Jitter:	< 0.2UI
Optical Power:	
1310nm FP:	-7dBm ±1dBm
1550nm DFB:	0 dBm ±1dBm
CWDM DFB:	0 dBm ±1dBm

Physical:

Dimensions:	With Flanges: 6"L x 4"W x 1"H (152mm L x 114mm W x 25mm H)
Weight:	0.5lbs (0.28kg)

Electrical:

Voltage:	Auto ranging 100-240VAC 12V DC 50/60Hz (adapter included)
Power:	6W

Compliance:

Safety:	Power supply UL Listed Complies with EU low voltage directive
Laser Safety:	Class 1 laser product Complies with 24 CFR 1040.10 and 1040.11 IEC 60825-1
EMI/RFI:	Complies with FCC Part 15, Class A EU EMC directive

Ordering Information

2405EO3F	SDI Miniature Optical Transmitter 1310nm FP, Laser
2405EO5D	SDI Miniature Optical Transmitter 1550nm DFB Laser

For CWDM, please refer to the end of the fiber section for ordering information

2405EOxx	SDI Miniature Optical Transmitter CWDM DFB Laser

All 2405 modules include power supply

Ordering Options Fiber Connector must be specified at time of order
Eg: Model +SC

Connector Suffix

+SC	SC/PC
+ST	ST/PC
+FC	FC/PC

Fiber Optic Patch Cable

CB-FP1M-SCPC	Single mode fiber cable, 1m, SC/PC male termination
CB-FP1M-STPC	Single mode fiber cable, 1m, ST/PC male termination
CB-FP5M-SCPC	Single mode fiber cable, 5m, SC/PC male termination
CB-FP5M-STPC	Single mode fiber cable, 5m, ST/PC male termination
CB-FP10M-SCPC	Single mode fiber cable, 10m, SC/PC male termination
CB-FP10M-STPC	Single mode fiber cable, 10m, ST/PC male termination

Features & Benefits

- Reclocking for all SDTV video rate including SMPTE 259M (143Mb/s-540Mb/s), SMPTE 310M (19.4Mb/s), SMPTE 344M (540Mb/s), M2S and DVB-ASI (270Mb/s)
- Automatic signal failure switching for optical input
- Immunity to video Pathological signals
- Supports single-mode and multi-mode fiber optic cable
- Rugged, small form factor enclosure
- Low Power, +12V DC operation

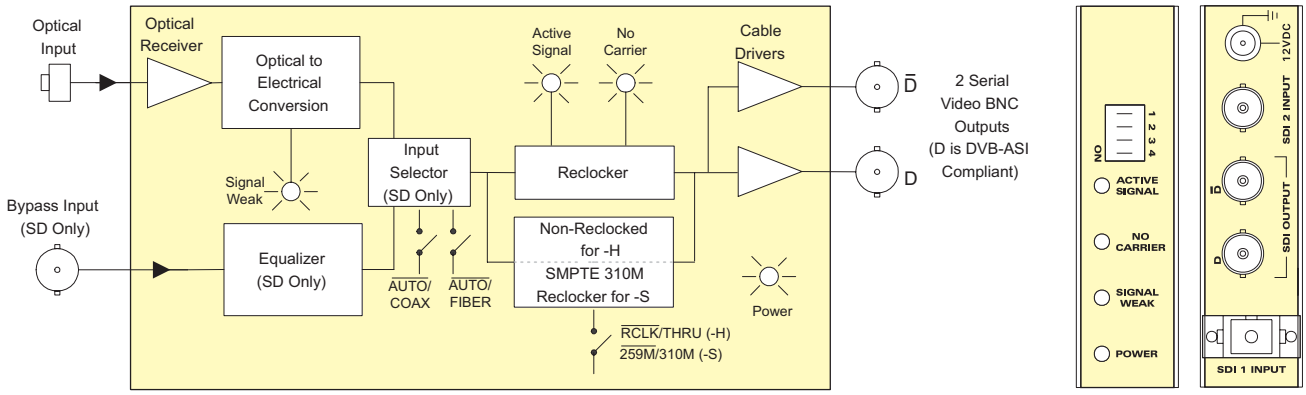

Specifications

Standards SMPTE 259M (A, B, C, D) , SMPTE 297M, SMPTE 310M, SMPTE 344M, M2S, DVB-ASI

Serial Video BNC Input
Number of Inputs: 1
Connector: BNC per IEC 60169-8 Amendment 2
Equalization: Automatic to 300m @ 270Mb/s with Belden 8281 (or equivalent)
Return Loss: > 15dB up to 540MHz

Optical Input
Number of Inputs: 1
Operating Wavelength: 1270nm to 1610nm
Maximum Input Power: 0dBm
Optical Sensitivity: -32 dBm
Connector: SC/PC, ST/PC, FC/PC Female Housing

Serial Video BNC Output:
Number of Outputs: 2 (1 output DVB-ASI/M2S compliant)
Connector: BNC per IEC 60169-8 Amendment 2
Signal Level: 800mV nominal
DC Offset: 0V ±0.5V
Rise, Fall Time: 900ps nominal
Overshoot: < 10% of amplitude
Return Loss: > 15dB up to 540MHz
Wideband Jitter: < 0.2 UI

Physical
Dimensions: With Flanges: 6"L x 4"W x 1"H (152mm L x 114mm W x 25mm H)
Weight: 0.5lbs (0.28kg)

Electrical
Voltage: Auto ranging 100-240VAC 12V DC 50/60Hz (adapter included)
Power: 6W

Compliance:
Safety: Power supply UL Listed
Complies with EU low voltage directive

Ordering Information

2405OE SDI Miniature Optical Receiver, 19.4Mb/s or 143-540Mb/s,

Ordering Options Rear Plate and Fiber Connector must be specified at time of order
Eg: Model +SC +3RU

Connector Suffix
+SC SC/PC
+ST ST/PC
+FC FC/PC

Fiber Optic Patch Cable
CB-FP1M-SCPC Single mode fiber cable, 1m, SC/PC male termination
CB-FP1M-STPC Single mode fiber cable, 1m, ST/PC male termination
CB-FP5M-SCPC Single mode fiber cable, 5m, SC/PC male termination
CB-FP5M-STPC Single mode fiber cable, 5m, ST/PC male termination
CB-FP10M-SCPC Single mode fiber cable, 10m, SC/PC male termination
CB-FP10M-STPC Single mode fiber cable, 10m, ST/PC male termination

Enclosures
7700FR-C 3RU Multiframe which holds up to 15 single slot modules
7701FR 1RU Multiframe which holds up to 3 single or dual slot modules
S7701FR Standalone Enclosure

7707VAT

SDI with 2 AES Audio Fiber Transmitter

Features & Benefits

- SDI video and 2 AES audio fiber optic transmitter
- Supports 270Mb/s on 525 or 625 line 4:2:2 component SDI and SDTi (SMPTE 305M) video signals
- Supports 32, 44.1, 48kHz AES audio inputs
- Dolby E compatible
- AES audio inputs can be synchronous or asynchronous to each other and/or to input video
- Reclocked SDI output for additional signal distribution or monitoring
- Signal transport over fiber uninterrupted by loss of SDI or AES audio input feeds
- Low audio to video latency over transport interface
- Local display of input SDI signal strength, video format, and EDH errors
- Comprehensive signal and card status monitoring via four digit card edge display or remotely through SNMP and VistaLINK®
- VistaLINK® capability is available when modules are used with the 3RU 7700FR-C frame and a 7700FC VistaLINK® Frame Controller module in slot 1 of the frame
- Automatic coaxial input equalization up to 300m at 270Mb/s (Belden 1694A)
- Fully hot-swappable from front of frame with no fiber disconnect/reconnect required
- Optical output wavelengths of 1310nm, 1550nm, and up to sixteen CWDM wavelengths (ITU-T G.694.2 compliant)
- DWDM wavelengths (ITU-T G.694.1 compliant) also available
- Supports single-mode and multi-mode fiber optic cable
- Occupies one card slot and can be housed in either a 1RU frame, which will hold up to 3 modules, a 3RU frame which will hold up to 15 modules or a standalone enclosure which will hold 1 module

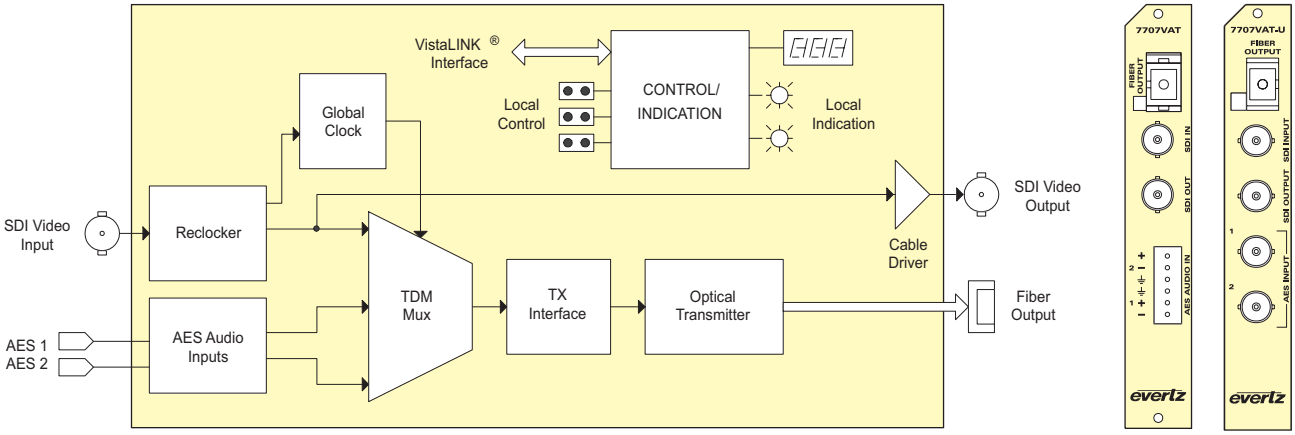

Specifications

Serial Video Input:

Standard:	SMPTE 259M-C, 525 or 625 line component, SMPTE 305M, (SDTi)
Connector:	1 BNC per IEC 60169-8 Amendment 2
Equalization:	Automatic to 300m @ 270Mb/s with Belden 1694A or equivalent cable
Return Loss:	> 15dB up to 270Mb/s

Serial Video Output:

Number of Outputs:	1 Per Card reclocked
Connector:	BNC per IEC 60169-8 Amendment 2
Signal Level:	800mV nominal
DC Offset:	0V ±0.5V
Rise and Fall Time:	900ps nominal
Overshoot:	< 10% of amplitude
Return Loss:	> 15dB at 270Mb/s
Wide Band Jitter:	< 0.2 UI

AES Audio Inputs (7707VAT & 7707VAT-U):

Number of Inputs:	2 (Jumper selectable for balanced or unbalanced input)
Standard:	
Unbalanced AES:	SMPTE 276M
Balanced AES:	AES3-1992
Other:	Dolby E compatible
Connector:	
7707VAT-U:	BNC per IEC 60169-8 Amendment 2
7707VAT:	6-pin terminal strip
Signal Level:	
Balanced:	2 to 7V p-p with level jumper set to HI, 1 to 2V p-p set to LO
Unbalanced:	1V p-p ±0.1V
Equalization:	
Balanced:	500m @ 48kHz with Belden 1800B or equivalent cable
Unbalanced:	2200m @ 48kHz with Belden 8281 or equivalent cable
Resolution:	Up to 24 bits
Sampling Rate:	32, 44.1, 48kHz
Impedance:	
Unbalanced:	75Ω
Balanced:	110Ω

Optical Output:

Number:	1
Connector:	Female SC/PC, ST/PC or FC/PC
Return Loss:	> 14dB
Rise and Fall Time:	200ps nominal
Wavelengths:	See Ordering Information
Output Power:	
1310nm FP (Standard):	-7dBm ±1dBm
1310nm FP (M version):	0dBm ±1dBm
1550nm & CWDM DFB:	0dBm ±1dBm
DWDM DFB:	7dBm ±1dBm
Fiber Size:	9µm core/125µm overall

System Performance (7707VAT + 7707VAR):

Video Input To Output Delay:	< 1.5µs
Audio to Video delay:	< 1µs with SoftSwitch™ disabled on 7707VAR < 2ms with SoftSwitch™ enabled on 7707VAR

Electrical:

Voltage:	+12V DC
Power:	10W (Non-DWDM) 13W (DWDM)

Compliance:

Electrical Safety:	CSA Listed to UL 60065-03, IEC 60065 Complies with CE Low voltage Directive
Laser Safety:	Class 1 laser product Complies with 24 CFR 1040.10 and 1040.11 IEC 60825-1
EMI/RFI:	Complies with FCC Part 15, Class A EU EMC directive

Ordering Information

7707VAT13	SDI with 2 AES Audio Fiber Transmitter, 1310nm, FP Laser, VistaLINK® Monitoring
7707VAT15	SDI with 2 AES Audio Fiber Transmitter, 1550nm, DFB Laser (0dBm), VistaLINK® Monitoring
For CWDM, please refer to the end of the fiber section for ordering information	
7707VATxx	SDI with 2 AES Audio Fiber Transmitter, CWDM DFB Laser, VistaLINK® Monitoring
For DWDM, please refer to the end of the fiber section for ordering information	
7707VATDxxx	SDI with 2 AES Audio Fiber Transmitter, DWDM wavelength, VistaLINK® Monitoring

Ordering Options	Rear Plate and Fiber Connector must be specified at time of order Eg: Model +SC +3RU
+U	Unbalanced AES Audio
Rear Plate Suffix	
+3RU	3RU Rear Plate for use with 7700FR-C Multiframe
+1RU	1RU Rear Plate for use with 7701FR Multiframe
+SA	Standalone Enclosure Rear Plate
Connector Suffix	
+SC	SC/PC
+ST	ST/PC
+FC	FC/PC
Enclosures	
7700FR-C	3RU Multiframe which holds up to 15 single slot modules
7701FR	1RU Multiframe which holds up to 3 single or dual slot modules
S7701FR	Standalone enclosure

Features & Benefits

- SDI video and 2 AES audio fiber optic receiver
- Supports 270Mb/s on 525 or 625 line 4:2:2 component SDI and SDTi (SMPTE 305M) video signals
- Supports 32, 44.1, 48kHz AES audio inputs
- Dolby E compatible
- Incorporates Evertz SoftSwitch™ (Patent Pending) technology for virtually glitch-free AES Audio outputs when upstream SDI or AES feeds are switched
- User-selectable SoftSwitch™ bypass
- Low Audio to Video latency
- Output AES "Mute" on loss of AES or fiber optic input signals
- SDI Video regeneration for jitter reduction
- Comprehensive signal and card status monitoring via four digit card edge display or remotely through SNMP and VistaLINK®
- Output Video "Black" or "Blue" (selectable) on loss of video or fiber optic input signals
- VistaLINK® capability is available when modules are used with the 3RU 7700FR-C frame and a 7700FC VistaLINK® Frame Controller module in slot 1 of the frame
- Local display of optical signal strength, video and audio presence, video and AES formats, EDH errors
- Fully hot-swappable from front of frame with no fiber disconnect/reconnect required
- Supports single-mode and multi-mode fiber optic cable
- Accepts any wavelength in the 1270nm to 1610nm range
- Occupies one card slot and can be housed in either a 1RU frame, which will hold up to 3 modules, a 3RU frame which will hold up to 15 modules or a standalone enclosure which will hold 1 module

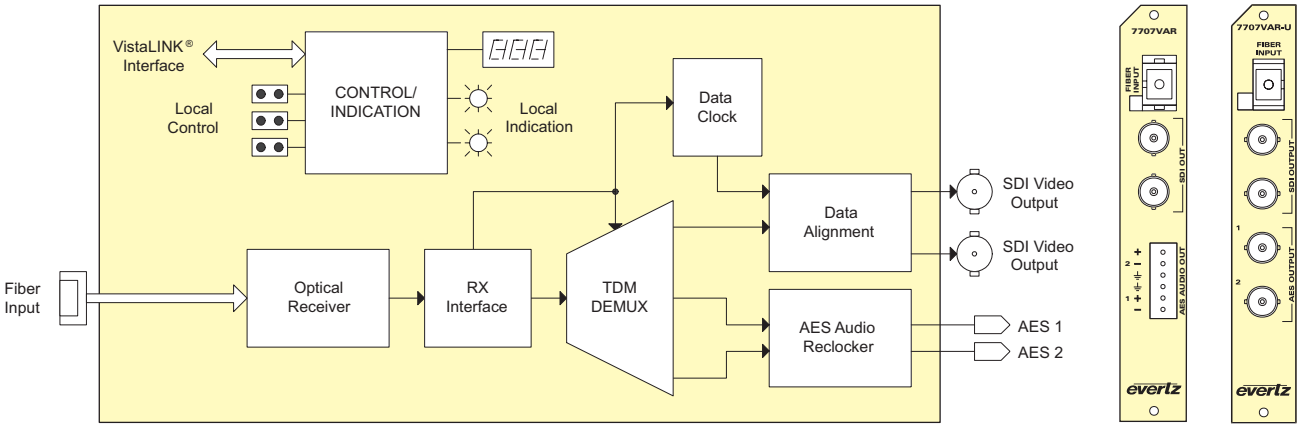

Specifications

Optical Input:

Number of Inputs:	1
Connector:	Female SC/PC, ST/PC, FC/PC
Return Loss:	> 25dB
Operating Wavelength:	1270nm to 1610nm
Max. Input Power:	0dBm
Optical Sensitivity:	-28dBm

Serial Video Outputs:

Number of Outputs:	2 regenerated
Standard:	SMPTE 259M-C (525 or 625 line component) SMPTE 305M (SDTi)
Connector:	BNC per IEC 60169-8 Amendment 2
Signal Level:	800mV nominal
DC Offset:	0V ±0.5V
Rise and Fall Time:	900ps nominal
Overshoot:	< 10% of amplitude
Return Loss:	> 15dB at 270Mb/s
Wide Band Jitter:	< 0.15 UI

AES Audio Outputs:

Number of Outputs:	2 regenerated
Standard:	Jumper selectable for balanced or unbalanced output
Unbalanced AES:	SMPTE 276M
Balanced AES:	AES3-1992 balanced AES
Connector:	
7707VAR-U:	BNC per IEC 60169-8 Amendment 2
7707VAR:	6-pin terminal strip
Signal Level	
Unbalanced:	1V p-p
Balanced:	5V p-p
Resolution:	up to 24 bits
Sampling Rate:	32, 44.1, 48kHz
Intrinsic Jitter:	< 20ns
Impedance:	
Unbalanced:	75Ω
Balanced:	110Ω

System Performance (7707VAT + 7707VAR):

Video Input To Output Delay:	< 1.5µs
Audio to Video delay:	< 1µs with SoftSwitch™ disabled < 2ms with SoftSwitch™ enabled

Electrical:

Voltage:	+12V DC
Power:	10W
EMI/RFI:	Complies with FCC Part 15, Class A EU EMC Directive

Physical:

Number of slots:	1

Ordering Information

7707VAR SDI with 2 AES Audio Fiber Receiver, VistaLINK® Monitoring

Ordering Options Rear Plate and Fiber Connector must be specified at time of order
Eg: Model +SC +3RU

+U Unbalanced AES Audio

Rear Plate Suffix

+3RU	3RU Rear Plate for use with 7700FR-C Multiframe
+1RU	1RU Rear Plate for use with 7701FR Multiframe
+SA	Standalone Enclosure Rear Plate

Connector Suffix

+SC	SC/PC
+ST	ST/PC
+FC	FC/PC

Fiber Optic Patch Cable

CB-FP1M-SCPC	Single mode fiber cable, 1m, SC/PC male termination
CB-FP1M-STPC	Single mode fiber cable, 1m, ST/PC male termination
CB-FP5M-SCPC	Single mode fiber cable, 5m, SC/PC male termination
CB-FP5M-STPC	Single mode fiber cable, 5m, ST/PC male termination
CB-FP10M-SCPC	Single mode fiber cable, 10m, SC/PC male termination
CB-FP10M-STPC	Single mode fiber cable, 10m, ST/PC male termination

Enclosures

7700FR-C	3RU Multiframe which holds up to 15 single slot modules
7701FR	1RU Multiframe which holds up to 3 single or dual slot modules
S7701FR	Standalone enclosure

7707VAT-A4

SDI with 4 Analog Audio Fiber Transmitter

Features & Benefits

- SDI Video and 4 broadcast quality analog audio fiber optic transmitter
- Supports 525 or 625 line 4:2:2 component SDI signals
- Analog audio inputs can be synchronous or asynchronous to each other and/or to input video
- Reclocked SDI output for additional signal distribution or monitoring
- Signal transport over fiber uninterrupted by loss of SDI or Analog audio input feeds
- Low Audio to Video latency over transport interface
- Local display of input SDI signal strength, video format, and EDH errors
- Automatic coaxial input equalization to 300m at 270Mb/s (Belden 8281)
- Comprehensive signal and card status monitoring via four digit card edge display or remotely through SNMP and VistaLINK®
- VistaLINK® capability is available when modules are used with the 3RU 7700FR-C frame and a 7700FC VistaLINK® Frame Controller module in slot 1 of the frame
- Fully hot-swappable from front of frame with no fiber disconnect/reconnect required
- Supports single-mode and multi-mode fiber optic cable
- Optical output wavelengths of 1310nm, 1550nm, and up to sixteen CWDM wavelengths (ITU-T G.694.2 compliant)
- DWDM wavelengths (ITU-T G.694.1 compliant) also available
- Occupies one card slot and can be housed in either a 1RU frame which will hold up to 3 modules, a 3RU frame which will hold up to 15 modules, or a standalone enclosure which will hold 1 module

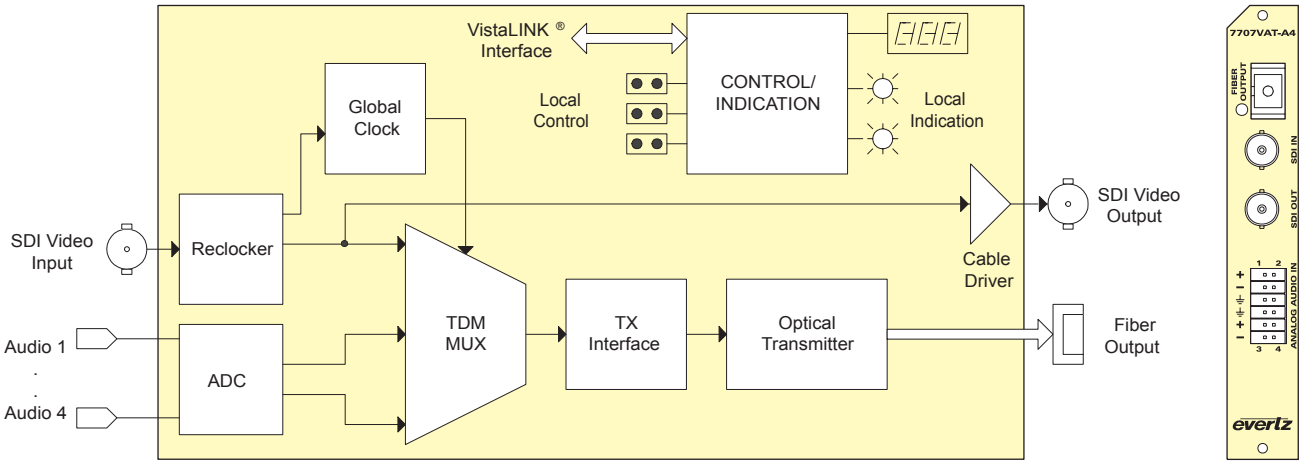

Specifications

Serial Video Input:

Standard:	SMPTE 259M-C
Connector:	1 BNC per IEC 60169-8 Amendment 2
Equalization:	Automatic to 300m @ 270Mb/s with Belden 8281 or equivalent cable
Return Loss:	> 15dB up to 270Mb/s

Serial Video Output:

Number of Outputs:	1 Per Card reclocked
Standard:	SMPTE 259M-C
Connector:	BNC per IEC 60169-8 Amendment 2
Signal Level:	800mV nominal
DC Offset:	0V ±0.5V
Rise and Fall Time:	900ps nominal
Overshoot:	< 10% of amplitude
Return Loss:	> 15dB at 270Mb/s
Wide Band Jitter:	< 0.2 UI

Analog Audio Inputs:

Number of Inputs:	4
Type:	Balanced analog audio
Connector:	12-pin removable terminal block
Input impedance:	High Impedance (> 20kΩ)
Freq. Response:	±0.1dB, 20Hz to 20kHz
THD 20Hz-20kHz:	< 0.005%
Channel Phase Diff.:	±1°
SNR (weighted):	> 85dB
Max. Audio Input Level:	+24dBu
Signal Quantization:	24 Bits

Optical Output:

Number:	1
Connector:	Female SC/PC, ST/PC or FC/PC
Return Loss:	> 14dB
Rise and Fall Time:	200ps nominal
Wavelengths:	See Ordering Information
Output Power:	
1310nm FP(Standard):	-7dBm ±1dBm
1310nm FP(M version):	0dBm ±1dBm
1550nm and CWDM DFB:	0dBm ±1dBm
DWDM DFB:	7dBm ±1dBm

System Performance (7707VAT-A4 + 7707VAR-A4):

Video Input To Output Delay:	< 2µs
Audio Input to Output delay:	< 1.9ms

Electrical:

Voltage:	+12V DC
Power:	11W (Non-DWDM), 13W (DWDM)

Compliance:

Electrical Safety:	CSA Listed to CSA C22.2 No. 60065-03, UL 60065-03 IEC 60065-(2001-12) 7th Edition Complies with CE Low voltage Directive 93/68/EEC
Laser Safety:	Complies with 24 CFR 1040.10 and 1040.11 except for deviations pursuant to LN No. 50, dated July 26, 2001 Complies with IEC 60825-1, Am. 2
EMI/RFI:	Complies with FCC regulations for class A devices Complies with EU EMC directive

Ordering Information

7707VAT13-A4	SDI with 4 Analog Audio Fiber Transmitter, 1310nm, FP Laser, VistaLINK® Monitoring
7707VAT15-A4	SDI with 4 Analog Audio Fiber Transmitter, 1550nm, DFB Laser(0dBm), VistaLINK® Monitoring

For CWDM, please refer to the end of the fiber section for ordering information

7707VATxx-A4	SDI with 4 Analog Audio Fiber Transmitter, CWDM DFB Laser, VistaLINK® Monitoring

For DWDM, please refer to the end of the fiber section for ordering information

7707VATDxxx-A4	SDI with 4 Analog Audio Fiber Transmitter, DWDM DFB Laser, VistaLINK® Monitoring

Ordering Options	Rear Plate and Fiber Connector must be specified at time of order Eg: Model +SC +3RU
Rear Plate Suffix	
+3RU	3RU Rear Plate for use with 7700FR-C Multiframe
+1RU	1RU Rear Plate for use with 7701FR Multiframe
+SA	Standalone Enclosure Rear Plate
Connector Suffix	
+SC	SC/PC
+ST	ST/PC
+FC	FC/PC
Enclosures	
7700FR-C	3RU Multiframe which holds up to 15 single slot modules
7701FR	1RU Multiframe which holds up to 3 single or dual slot modules
S7701FR	Standalone Enclosure

Features & Benefits

- SDI video and four broadcast quality analog audio fiber optic receiver
- Supports 525 or 625 line 4:2:2 component SDI signals
- Low Audio to Video latency
- Output Video "Black" or "Blue" (selectable) on loss of video or fiber optic input signals
- Built-in jitter attenuation
- Local display of optical signal strength, video and audio presence, video format and EDH errors
- Fully hot-swappable from front of frame with no fiber disconnect/reconnect required
- Comprehensive signal and card status monitoring via four digit card edge display or remotely through SNMP and VistaLINK®
- VistaLINK® capability is available when modules are used with the 3RU 7700FR-C frame and a 7700FC VistaLINK® Frame Controller module in slot 1 of the frame
- Supports single mode and multi mode fiber optic cable
- Accepts any wavelength in the 1270nm to 1610nm range
- Occupies one card slot and can be housed in either a 1RU frame which will hold up to 3 modules, a 3RU frame which will hold up to 15 modules, or a standalone enclosure which will hold 1 module

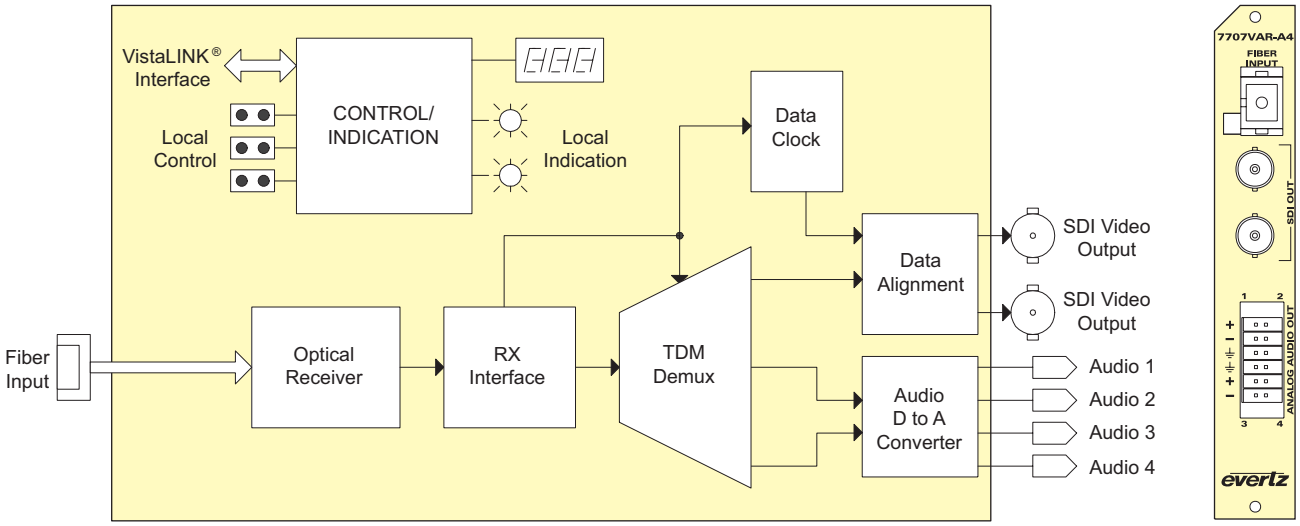

Specifications

Optical Input:
Number of Inputs: 1
Connector: Female SC/PC, ST/PC, FC/PC
Operating Wavelength: 1270nm to 1610nm
Maximum Input Power: 0dBm
Optical Sensitivity: -28dBm

Serial Video Outputs:
Number of Outputs: 2 regenerated
Standard: SMPTE 259M-C
Connector: BNC per IEC 60169-8 Amendment 2
Signal Level: 800mV nominal
DC Offset: 0V ±0.5V
Rise and Fall Time: 900ps nominal
Overshoot: < 10% of amplitude
Return Loss: > 15dB at 270Mb/s
Wide Band Jitter: < 0.2 UI

Analog Audio Outputs:
Number of Outputs: 4
Type: Balanced analog audio
Connector: 12-pin removable terminal block
Output impedance: < 100Ω
Freq. Response: ±0.1dB, 20Hz to 20 kHz
THD 20Hz-20kHz: < 0.005%
Channel Phase Diff.: ±1°
SNR (weighted): > 85dB
Output Level: Adjustable to +24dBu
Audio Headroom: +24dBu

System Performance (7707VAT-A4 + 7707VAR-A4):
Video Input To Output Delay: < 2µs
Audio Input to Output delay: < 1.9ms

Electrical:
Voltage: +12V DC
Power: 11W
EMI/RFI: Complies with FCC Part 15, Class A EU EMC directive

Physical:
Number of slots: 1

Ordering Information

7707VAR -A4 SDI with 4 Analog Audio Fiber Receiver

Ordering Options Rear Plate and Fiber Connector must be specified at time of order
Eg: Model +SC +3RU

+U Unbalanced AES Audio

Rear Plate Suffix
+3RU 3RU Rear Plate for use with 7700FR-C Multiframe
+1RU 1RU Rear Plate for use with 7701FR Multiframe
+SA Standalone Enclosure Rear Plate

Connector Suffix
+SC SC/PC
+ST ST/PC
+FC FC/PC

Fiber Optic Patch Cable
CB-FP1M-SCPC Single mode fiber cable, 1m, SC/PC male termination
CB-FP1M-STPC Single mode fiber cable, 1m, ST/PC male termination
CB-FP5M-SCPC Single mode fiber cable, 5m, SC/PC male termination
CB-FP5M-STPC Single mode fiber cable, 5m, ST/PC male termination
CB-FP10M-SCPC Single mode fiber cable, 10m, SC/PC male termination
CB-FP10M-STPC Single mode fiber cable, 10m, ST/PC male termination

Enclosures
7700FR-C 3RU Multiframe which holds up to 15 single slot modules
7701FR 1RU Multiframe which holds up to 3 single or dual slot modules
S7701FR Standalone enclosure

7707VT-4

Quad SDI/ASI Mux Fiber Transmitter

Features & Benefits

- Single card TDM multiplexer for four synchronous or asynchronous 270Mb/s SDI, SDTi or DVB-ASI video signals
- Signal transport over fiber uninterrupted by loss of any SDI, SDTi or DVB-ASI input feed
- Transparently passes embedded AES or any other data in the horizontal or vertical ancillary data space
- Comprehensive signal and card status monitoring via four digit card edge display or remotely through SNMP and VistaLINK®
- VistaLINK® capability is available when modules are used with the 3RU 7700FR-C frame and a 7700FC VistaLINK® Frame Controller module in slot 1 of the frame
- Automatic coaxial input equalization up to 250m at 270Mb/s (Belden 8281)
- Fully hot-swappable from front of frame with no fiber disconnect/reconnect required
- Supports single-mode and multi-mode fiber optic cable
- Optical output wavelengths of 1310nm, 1550nm, and up to sixteen CWDM wavelengths (ITU-T G.694.2 compliant)
- DWDM wavelengths (ITU-T G.694.1 compliant) also available
- SC/PC, ST/PC, FC/PC connector options
- Occupies one card slot & can be housed in a standalone frame, a 1RU frame holding up to 3 modules or a 3RU frame holding up to 15 modules

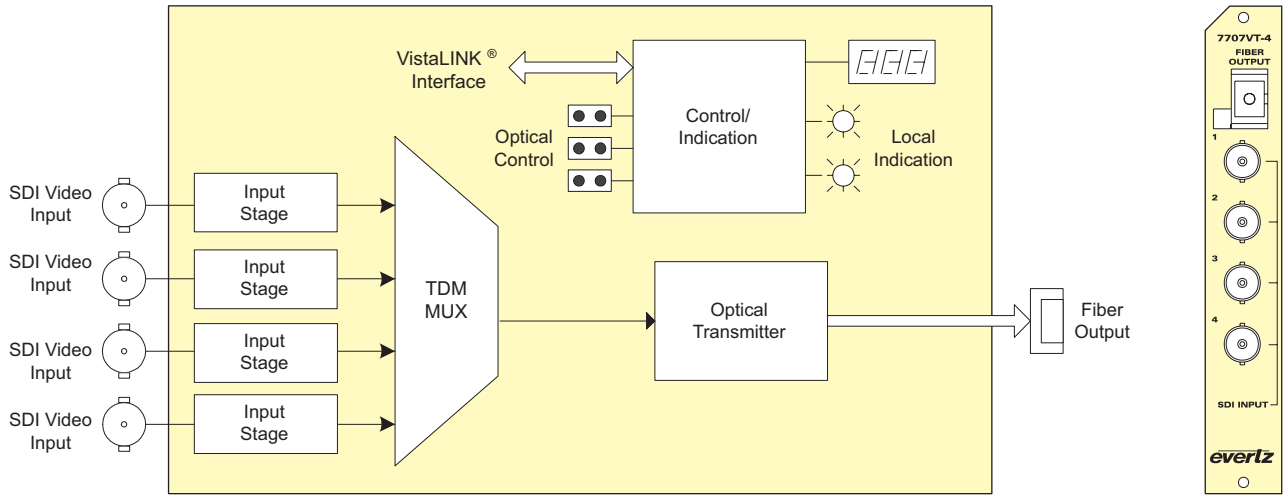

Specifications

Serial Video Input:

Standard:	SMPTE 259M-C, SMPTE 305M, DVB-ASI
Number of Inputs:	4 independent SDI or DVB-ASI 270Mb/s signals
Connector:	4 BNC per IEC 60169-8 Amendment 2
Equalization:	Automatic to 250m @ 270Mb/s with Belden 8281 or equivalent cable
Return Loss:	> 15dB up to 270Mb/s

Optical Output:

Number:	1
Connector:	Female SC/PC, ST/PC or FC/PC
Return Loss:	> 14dB
Rise and Fall Time:	200ps nominal
Wideband Jitter:	< 0.2 UI
Fiber Size:	9µm core/125µm overall

Wavelengths:

Standard:	1310nm, 1550nm (nominal)
CWDM:	1270nm to 1610nm (See Ordering Information)
DWDM:	C-Band (ITU-T G.694.1 compliant) (See Ordering Information)

Output Power:

1310nm FP(Standard):	-7dBm ±1dBm
1550nm & CWDM DFB:	0dBm ±1dBm
DWDM DFB:	7dBm ±1dBm

Electrical:

Voltage:	+12V DC
Power:	10W (Non DWDM), 13W (DWDM)

Physical:

Number of slots:	1

Compliance:

Electrical Safety:	CSA Listed to UL 60065-03, IEC 60065 Complies with CE Low voltage Directive
Laser Safety:	Class 1 laser product Complies with 24 CFR 1040.10 and 1040.11 IEC 60825-1
EMI/RFI:	Complies with FCC Part 15, Class A EU EMC directive

Ordering Information

7707VT13-4	Quad SDI/ASI Mux Fiber Transmitter, 1310nm FP, VistaLINK®
7707VT15-4	Quad SDI/ASI Mux Fiber Transmitter, 1550nm DFB, VistaLINK®
For CWDM, please refer to the end of the fiber section for ordering information	
7707VTxx-4	Quad SDI/ASI Mux Fiber Transmitter, CWDM Laser, VistaLINK®
For DWDM, please refer to the end of the fiber section for ordering information	
7707VTDxxx-4	Quad SDI/ASI Mux Fiber Transmitter, DWDM Laser, VistaLINK®

Ordering Options	Rear Plate and Fiber Connector must be specified at time of order Eg: Model +SC +3RU
Rear Plate Suffix	
+3RU	3RU Rear Plate for use with 7700FR-C Multiframe
+1RU	1RU Rear Plate for use with 7701FR Multiframe
+SA	Standalone Enclosure Rear Plate
Connector Suffix	
+SC	SC/PC
+ST	ST/PC
+FC	FC/PC
Enclosures	
7700FR-C	3RU Multiframe which holds up to 15 single slot modules
7701FR	1RU Multiframe which holds up to 3 single or dual slot modules
S7701FR	Standalone enclosure

Features & Benefits

- Single card demultiplexer for four synchronous or asynchronous 270Mb/s SDI, SDTi or DVB-ASI video signals
- Low jitter SDI outputs
- Independent signal outputs unaffected by loss of any other SDI or DVB-ASI input feed
- Transparently passes embedded AES or any other data in the horizontal or vertical ancillary data space
- Fully hot-swappable from front of frame with no fiber disconnect/reconnect required
- Supports single-mode and multi-mode fiber optic cable
- Accepts any wavelength in the 1270nm to 1610nm range
- SC/PC, ST/PC, FC/PC connector options
- Comprehensive signal and card status monitoring via four digit card edge display or remotely through SNMP and VistaLINK®
- VistaLINK® capability is available when modules are used with the 3RU 7700FR-C frame and a 7700FC VistaLINK® Frame Controller module in slot 1 of the frame
- Occupies one card slot & can be housed in a standalone frame, a 1RU frame holding up to 3 modules or a 3RU frame holding up to 15 modules

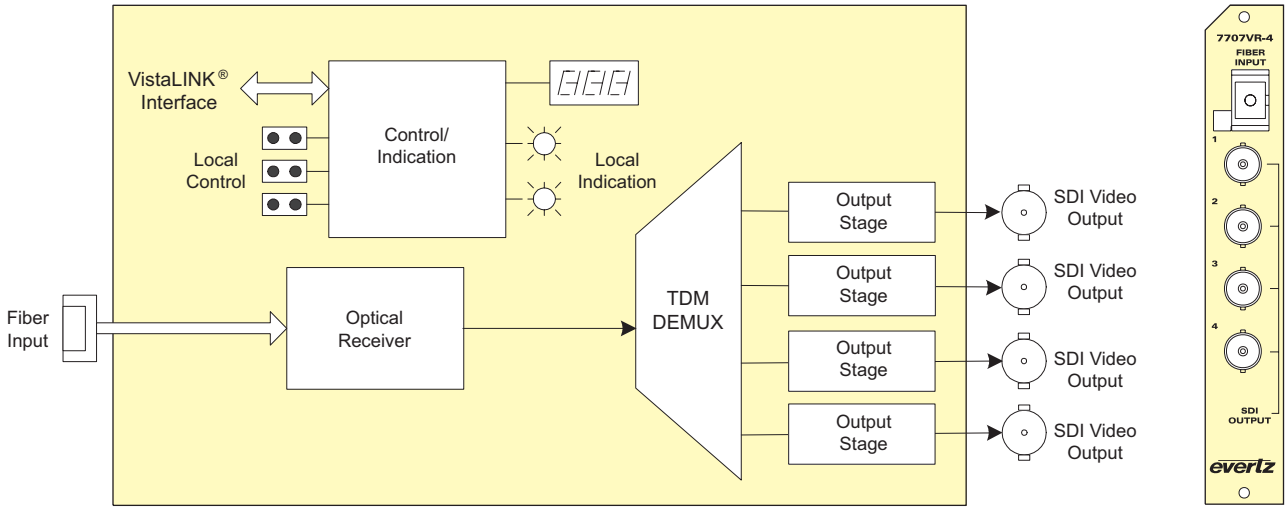

Specifications

Optical Input:
Number of Inputs: 1
Connector: Female SC/PC, ST/PC, FC/PC
Return Loss: > 25dB
Operating Wavelength: 1270nm to 1610nm
Maximum Input Power:
Standard Version: -1dBm
-H Version: -8dBm
Optical Sensitivity:
Standard Version: -23dBm
-H Version: -28dBm

Serial Video Outputs:
Standards: SMPTE 259M-C, SMPTE 305M, DVB-ASI
Number of Outputs: 4 independent SDI, SDTi or DVB-ASI 270Mb/s signals
Connector: BNC per IEC 60169-8 Amendment 2
Signal Level: 800mV nominal
DC Offset: 0V ±0.5V
Rise and Fall Time: 900ps nominal
Overshoot: < 10% of amplitude
Return Loss: > 15dB up to 270Mb/s
Wide Band Jitter: < 0.2 UI

Electrical:
Voltage: +12V DC
Power: 10W
EMI/RFI: Complies with FCC Part 15, Class A EU EMC directive

Physical:
Number of slots: 1

Ordering Information

7707VR-4	Quad SDI/ASI Demux Fiber Receiver, VistaLINK®
7707VR-4-H	Quad SDI/ASI Demux Fiber Receiver, High sensitivity RX VistaLINK®

Ordering Options Rear Plate and Fiber Connector must be specified at time of order
Eg: Model +SC +3RU

Rear Plate Suffix

+3RU	3RU Rear Plate for use with 7700FR-C Multiframe
+1RU	1RU Rear Plate for use with 7701FR Multiframe
+SA	Standalone Enclosure Rear Plate

Connector Suffix

+SC	SC/PC
+ST	ST/PC
+FC	FC/PC

Enclosures

7700FR-C	3RU Multiframe which holds up to 15 single slot modules
7701FR	1RU Multiframe which holds up to 3 single or dual slot modules
S7701FR	Standalone enclosure

7707VT-8

8 Channel SDI/ASI Fiber Transmitter

Features & Benefits

- Multiplexor for eight synchronous or asynchronous 270Mb/s SDI, DVB-ASI or SDTi video signals
- Signal transport uninterrupted by loss of any SDI, DVB-ASI or SDTi input feed
- Transparently passes embedded AES or any other data in the horizontal or vertical ancillary data space
- Comprehensive signal and card status monitoring via four digit card edge display or remotely through SNMP and VistaLINK®
- VistaLINK® capability is available when modules are used with the 3RU 7700FR-C frame and a 7700FC VistaLINK® Frame Controller module in slot 1 of the frame
- Automatic coaxial equalization up to 250m at 270Mb/s (Belden 8281)
- Fully hot-swappable from front of frame with no fiber/coax disconnect/reconnect required
- Supports single-mode and multi-mode fiber optic cable
- Optical output wavelengths of 1310nm, 1550nm and up to 16 CWDM wavelengths
- DWDM wavelengths also available
- SC/PC, ST/PC, FC/PC fiber connectors available
- Input selection feature allows user to route 1 of the 8 incoming video signals to the SDI output

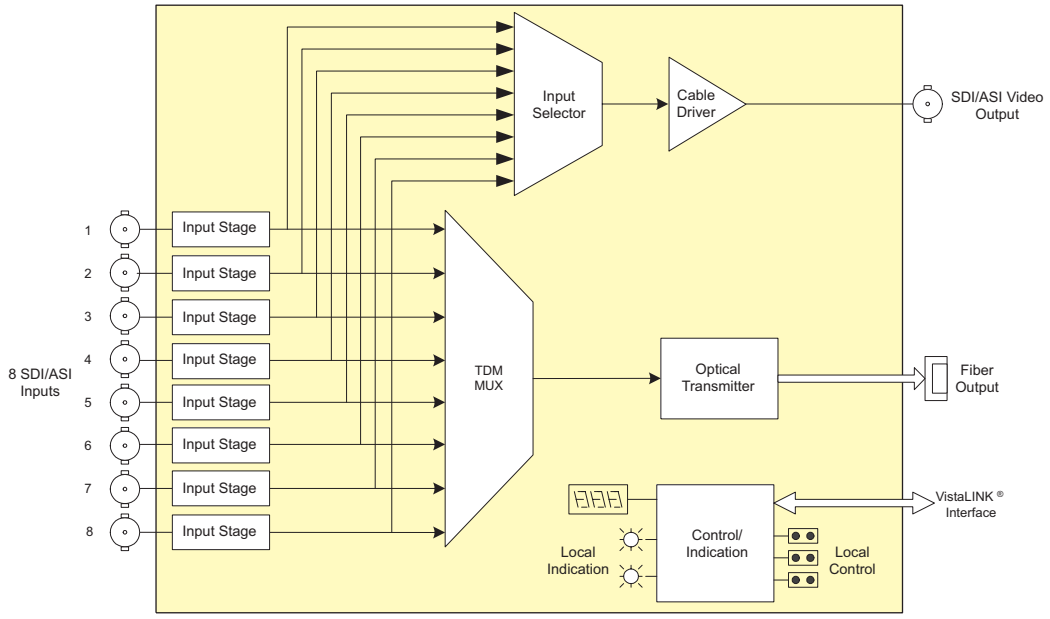

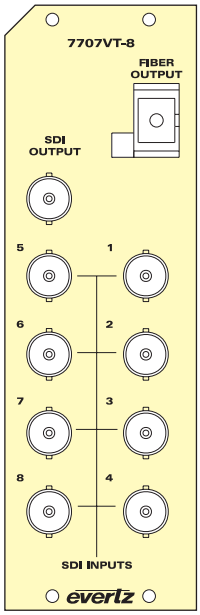

Specifications

Serial Video Input:

Standard:	SMPTE 259M, SMPTE 305M, DVB-ASI
Number of Inputs:	8 independent SDI, SDTi or DVB-ASI 270Mb/s signals
Connector:	8 BNC per IEC 60169-8 Amendment 2
Equalization:	Automatic to 250m @ 270Mb/s with Belden 8281 or equivalent cable
Return Loss:	> 15dB up to 270Mb/s

Serial Video Output:

Standards:	SMPTE 259M, SMPTE 305M, DVB-ASI
Number of Outputs:	1 Independent SDI, SDTi or DVB-ASI 270Mb/s signal
Connectors:	BNC per IEC 60169-8 Amendment 2
Signal Level:	800mV(nominal)
DC Offset:	0V ±0.5V
Rise and Fall Time:	900ps(nominal)
Overshoot:	< 10% of amplitude
Return Loss:	> 15dB to 270Mb/s
Wide Band Jitter:	< 0.2 UI

Optical Output:

Number:	1
Connector:	Female SC/PC, ST/PC or FC/PC
Return Loss:	> 14dB
Wideband Jitter:	< 0.2 UI
Fiber Size:	9µm core/125µm overall
Wavelengths:	
Standard:	1310nm, 1550nm (nominal)
CWDM:	1270nm to 1610nm (See Ordering Information)
DWDM:	C-Band (ITU-T G.694.1 compliant) (See Ordering Information)
Output Power:	
1310nm FP(Standard):	-7dBm ±1dBm
1550nm & CWDM DFB:	0dBm ±1dBm
DWDM DFB:	7dBm ±1dBm

Electrical:

Voltage:	+12V DC
Power:	12W (Non DWDM), 15W (DWDM)

Physical:

Number of slots:	2

Compliance:

Electrical Safety:	CSA Listed to UL 60065-03, IEC 60065 Complies with CE Low voltage Directive
Laser Safety:	Class 1 laser product Complies with 24 CFR 1040.10 and 1040.11 IEC 60825-1
EMI/RFI:	Complies with FCC Part 15, Class A EU EMC directive

Ordering Information

7707VT13-8	Eight SDI/ASI Mux Fiber Transmitter, 1310nm FP, Laser, VistaLINK®
7707VT15-8	Eight SDI/ASI Mux Fiber Transmitter, 1550nm DFB Laser, VistaLINK®
For CWDM, please refer to the end of the fiber section for ordering information	
7707VTxx-8	Eight SDI/ASI Mux Fiber Transmitter, CWDM Laser, VistaLINK®
For DWDM, please refer to the end of the fiber section for ordering information	
7707VTDxxx-8	Eight SDI/ASI Mux Fiber Transmitter, DWDM Laser, VistaLINK®

Ordering Options	Rear Plate and Fiber Connector must be specified at time of order Eg: Model +SC +3RU
Rear Plate Suffix	
+3RU	3RU Rear Plate for use with 7700FR-C Multiframe
+1RU	1RU Rear Plate for use with 7701FR Multiframe
+SA	Standalone Enclosure Rear Plate
Connector Suffix	
+SC	SC/PC
+ST	ST/PC
+FC	FC/PC
Enclosures	
7700FR-C	3RU Multiframe which holds up to 15 single slot modules
7701FR	1RU Multiframe which holds up to 3 single or dual slot modules
S7701FR	Standalone enclosure

Features & Benefits

- Demultiplexor for eight synchronous or asynchronous 270Mb/s SDI, DVB-ASI or SDTi video signals
- Signal transport over fiber uninterrupted by loss of any input video feed
- Transparently passes embedded AES or any other data in the horizontal or vertical ancillary data space
- Comprehensive signal and card status monitoring via four digit card edge display or remotely through SNMP and VistaLINK®
- VistaLINK® capability is available when modules are used with the 3RU 7700FR-C frame and a 7700FC VistaLINK® Frame Controller module in slot 1 of the frame
- Supports single-mode and multi-mode fiber optic cable
- Accepts any wavelength in the 1270nm to 1610nm range
- SC/PC, ST/PC, FC/PC fiber connectors available

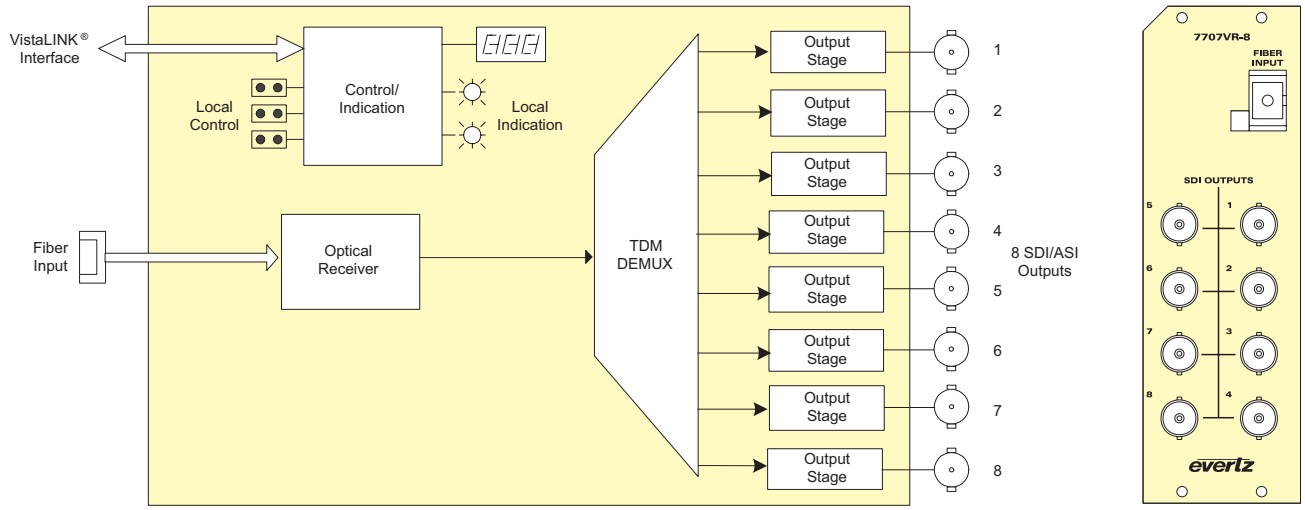

Specifications

Optical Input:

Number of Inputs:	1
Connector:	Female SC/PC, ST/PC, FC/PC
Return Loss:	> 25dB
Operating Wavelength:	1270nm to 1610nm
Maximum Input Power:	
Standard Version:	-1dBm
-H Version:	-8dBm
Optical Sensitivity:	
Standard Version:	-21dBm
-H Version:	-28dBm

Serial Video Output:

Standards:	SMPTE 259M, SMPTE 305M, DVB-ASI
Number of Outputs:	8 independent SDI, SDTi or DVB-ASI 270Mb/s signals
Connector:	BNC per IEC 60169-8 Amendment 2
Signal Level:	800mV nominal
DC Offset:	0V ±0.5V
Rise and Fall Time:	900ps nominal
Overshoot:	< 10% of amplitude
Return Loss:	> 15dB up to 270Mb/s
Wide Band Jitter:	< 0.2 UI

Electrical:

Voltage:	+12V DC
Power:	12W
Safety:	CSA Listed to CSA C22.2 No. 60065-03, UL 60065-03 IEC 60065-(2001-12) 7th Edition Complies with CE Low voltage Directive 93/68/EEC
EMI/RFI:	Complies with FCC regulations for class A devices Complies with EU EMC directive 89/336/EEC

Physical:

Number of slots:	2

Ordering Information

7707VR-8	Eight SDI/ASI Demux Fiber Receiver, VistaLINK® Monitoring
7707VR-8-H	Eight SDI/ASI Demux Fiber Receiver, High Sensitivity Optical Input, VistaLINK® Monitoring

Ordering Options Rear Plate and Fiber Connector must be specified at time of order
Eg: Model +SC +3RU

Rear Plate Suffix

+3RU	3RU Rear Plate for use with 7700FR-C Multiframe
+1RU	1RU Rear Plate for use with 7701FR Multiframe
+SA	Standalone Enclosure Rear Plate

Connector Suffix

+SC	SC/PC
+ST	ST/PC
+FC	FC/PC

Enclosures

7700FR-C	3RU Multiframe which holds up to 15 single slot modules
7701FR	1RU Multiframe which holds up to 3 single or dual slot modules
S7701FR	Standalone enclosure

7707VT-2-HD

Dual HD-SDI Fiber Transmitter

Features & Benefits

- Single card multiplexer for two 1.485Gb/s HD-SDI video signals
- Signal transport over fiber uninterrupted by loss of any HD-SDI, input feed
- Transparently passes embedded AES or any other data in the horizontal or vertical ancillary data space
- Comprehensive signal and card status monitoring via four digit card edge display or remotely through SNMP and VistaLINK®
- VistaLINK® capability is available when modules are used with the 3RU 7700FR-C frame and a 7700FC VistaLINK® Frame Controller module in slot 1 of the frame
- Automatic coaxial input equalization up to 100m at 1.485Gb/s
- Fully hot-swappable from front of frame
- Supports single-mode and multi-mode fiber optic cable
- Optical output wavelengths of 1310nm, 1550nm, and up to sixteen CWDM wavelengths (ITU-T G.694.2 compliant)
- DWDM wavelengths (ITU-T G.694.1 compliant) also available
- SC/PC, ST/PC, FC/PC connector options
- Occupies one card slot & can be housed in a standalone frame, a 1RU frame holding up to 3 modules or a 3RU frame holding up to 15 modules

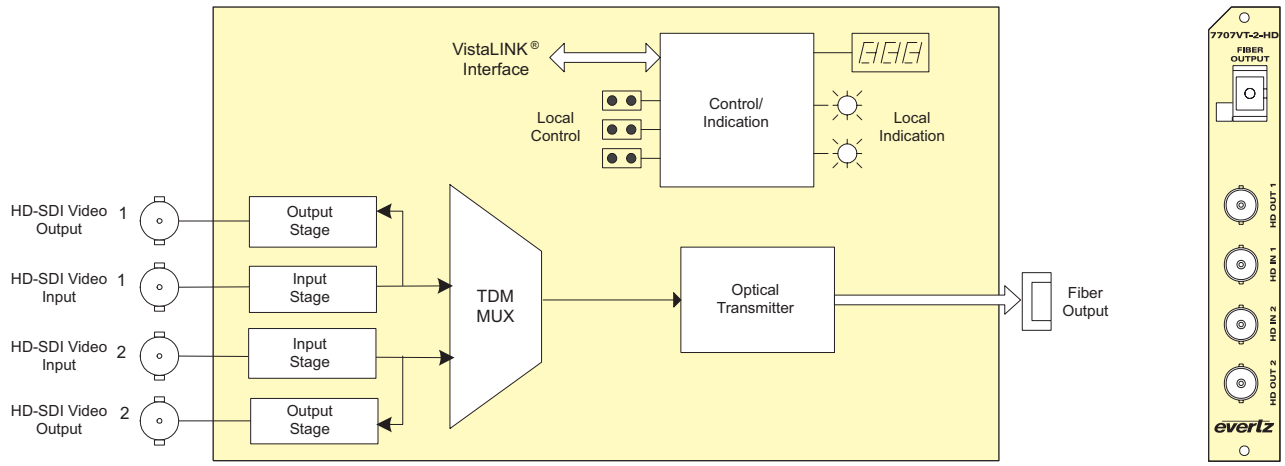

Specifications

Serial Video Input:

Standard:	SMPTE 292M
Number of Inputs:	2 independent HD-SDI signals
Connector:	BNC per IEC 60169-8 Amendment 2
Equalization:	Automatic to 100m @ 1.485Gb/s with Belden 1694A or equivalent cable
Return Loss:	> 15dB up to 1.485Gb/s

Serial Video Outputs:

Standard:	SMPTE 292M
Number of Outputs:	2 independent reclocked HD-SDI outputs
Connector:	BNC per IEC 60169-8 Amendment 2
Signal Level:	800mV nominal
DC Offset:	0V ±0.5V
Rise and Fall Time:	270ps nominal
Overshoot:	< 10% of amplitude
Return Loss:	> 15dB up to 1.485Gb/s
Wide Band Jitter:	< 0.2 UI

Optical Output:

Number:	1
Connector:	Female SC/PC, ST/PC or FC/PC
Return Loss:	> 14dB
Wideband Jitter:	< 0.2 UI
Fiber Size:	9µm core/125µm overall
Wavelengths:	
Standard:	1310nm, 1550nm
CWDM:	1270nm to 1610nm (See Ordering Information)
DWDM:	C-Band (ITU-T G.694.1 compliant) (See Ordering Information)
Output Power:	
1310nm FP(Standard):	-7dBm ±1dBm
1550nm & CWDM DFB:	0dBm ±1dBm
DWDM DFB:	7dBm ±1dBm

Electrical:

Voltage:	+12V DC
Power:	10W (Non DWDM), 13W (DWDM)

Compliance:

Electrical Safety:	CSA Listed to UL 60065-03, IEC 60065 Complies with CE Low voltage Directive
Laser Safety:	Class 1 laser product Complies with 24 CFR 1040.10 and 1040.11 IEC 60825-1
EMI/RFI:	Complies with FCC Part 15, Class A EU EMC directive

Ordering Information

7707VT13-2-HD	Dual HD-SDI Mux Fiber Transmitter, 1310nm FP
7707VT15-2-HD	Dual HD-SDI Mux Fiber Transmitter, 1550nm DFB Laser

For CWDM, please refer to the end of the fiber section for ordering information

7707VTxx-2-HD	Dual HD-SDI Mux Fiber Transmitter, CWDM Laser

For DWDM, please refer to the end of the fiber section for ordering information

7707VTDxxx-2-HD	Dual HD-SDI Mux Fiber Transmitter, DWDM Laser

Ordering Options Rear Plate and Fiber Connector must be specified at time of order
Eg: Model +SC +3RU

Rear Plate Suffix

+3RU	3RU Rear Plate for use with 7700FR-C Multiframe
+1RU	1RU Rear Plate for use with 7701FR Multiframe
+SA	Standalone Enclosure Rear Plate

Connector Suffix

+SC	SC/PC
+ST	ST/PC
+FC	FC/PC

Enclosures

7700FR-C	3RU Multiframe which holds up to 15 single slot modules
7701FR	1RU Multiframe which holds up to 3 single or dual slot modules
S7701FR	Standalone enclosure

Features & Benefits

- Single card demultiplexer for two 1.485Gb/s HD-SDI video signals
- Signal transport over fiber uninterrupted by loss of any HD-SDI input feed
- Transparently passes embedded AES or any other data in the horizontal or vertical ancillary data space
- Fully hot-swappable from front of frame
- Supports single-mode and multi-mode fiber optic cable
- Accepts any wavelength in the 1270nm to 1610nm range
- SC/PC, ST/PC, FC/PC connector options
- Comprehensive signal and card status monitoring via four digit card edge display or remotely through SNMP and VistaLINK®
- VistaLINK® capability is available when modules are used with the 3RU 7700FR-C frame and a 7700FC VistaLINK® Frame Controller module in slot 1 of the frame
- Occupies one card slot & can be housed in a standalone frame, a 1RU frame holding up to 3 modules or a 3RU frame holding up to 15 modules

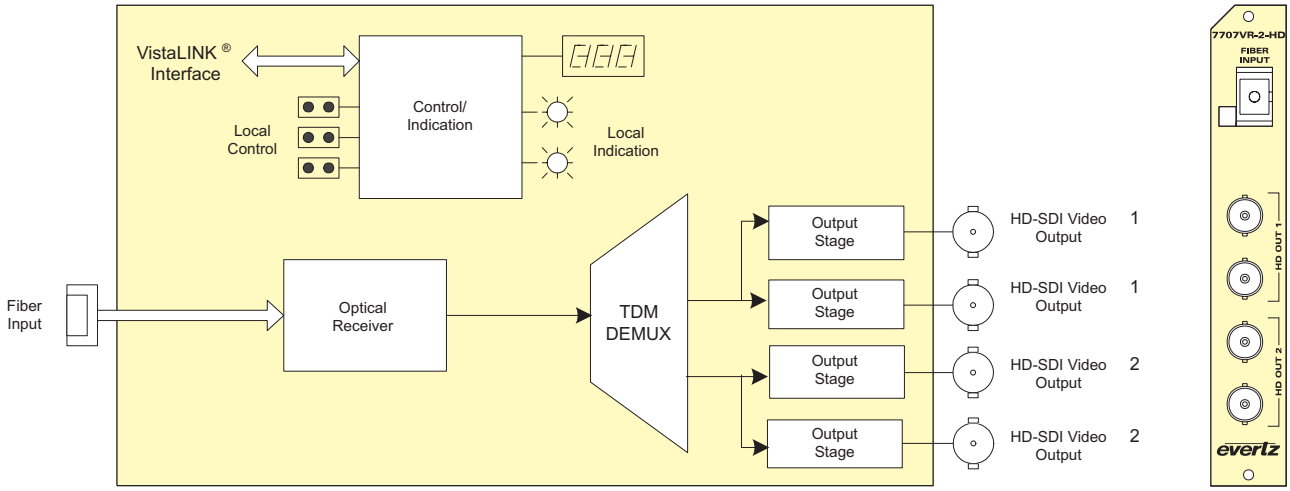

Specifications

Optical Input:
Number of Inputs: 1
Connector: Female SC/PC, ST/PC, FC/PC
Return Loss: > 25dB
Operating Wavelength:
1270nm to 1610nm
Maximum Input Power:
Standard Version: -1dBm
-H Version: -7dBm
Optical Sensitivity:
Standard Version: -20dBm
-H Version: -28dBm

Serial Video Outputs:
Standards: SMPTE 292M
Number of Outputs: 2 sets of 2 independent HD-SDI signals
Connector: BNC per IEC 60169-8 Amendment 2
Signal Level: 800mV nominal
DC Offset: 0V ±0.5V
Rise and Fall Time: 270ps nominal
Overshoot: < 10% of amplitude
Return Loss: > 15dB up to 1.485Gb/s
Wide Band Jitter: < 0.2 UI

Electrical:
Voltage: +12V DC
Power: 10W

Physical:
Number of slots: 1

Ordering Information

7707VR-2-HD	Dual HD-SDI Fiber Receiver, VistaLINK® Monitoring
7707VR-2-HD-H	Dual HD-SDI Fiber Receiver, High Sensitivity Optical Input, VistaLINK® Monitoring

Ordering Options Rear Plate and Fiber Connector must be specified at time of order
Eg: Model +SC +3RU

Rear Plate Suffix
+3RU 3RU Rear Plate for use with 7700FR-C Multiframe
+1RU 1RU Rear Plate for use with 7701FR Multiframe
+SA Standalone Enclosure Rear Plate

Connector Suffix
+SC SC/PC
+ST ST/PC
+FC FC/PC

Enclosures
7700FR-C 3RU Multiframe which holds up to 15 single slot modules
7701FR 1RU Multiframe which holds up to 3 single or dual slot modules
S7701FR Standalone enclosure

7707MT

SDI, 2 AES Audio, Bi-directional RS-232/422, 2 GPI & 2 GPO, Fiber Transmitter

The 7707MT Multi-Signal Fiber Transmitter is a VistaLINK® capable, fiber transmitter for SDI Video, AES Audio, RS422 control and GPI/O. This single card module transports one uni-directional SDI Video, two uni-directional AES Audio, one bi-directional RS422 and two bi-directional GPIs and GPOs. These signals are combined using Time Domain Multiplex (TDM) technology and transmitted over a single fiber. The companion 7707MR Multi-Signal Fiber Receiver demultiplexes the signals and converts them back to their original formats. The 7707MT and companion 7707MR will transparently pass incoming SDI video feeds with embedded AES audio or any other data in the horizontal or vertical ancillary data space. Minimal Audio to Video latency over the transport interface is also achieved.

The fiber output is available in an assortment of optical wavelengths, accommodating 1310/1550nm, CWDM and DWDM transmission schemes.

The 7707MT occupies one card slot and can be housed in either a 1RU frame which will hold up to 3 modules, a 3RU frame which will hold up to 15 modules or a standalone enclosure which will hold 1 module.

Features & Benefits

- SDI Video, 2 AES Audio, 1 bi-directional RS-232/422 and 2 GPI/O fiber optic transmitter
- Supports 525 or 625 line 4:2:2 component SDI signals
- Supports SDTi signals
- Supports 32, 44.1, 48kHz AES audio inputs
- Dolby E compatible
- Supports bi-directional RS422 signals at baud rates up to 3Mb/s
- AES audio inputs can be synchronous or asynchronous to each other and/or to input video
- Reclocked SDI output for additional signal distribution
- Signal transport over fiber uninterrupted by loss of input SDI, AES, Serial Data or GPI/O feeds
- Low Audio to Video latency over transport interface
- Comprehensive signal and card status monitoring via four digit card edge display or remotely through SNMP and VistaLINK®
- VistaLINK® capability is available when modules are used with the 3RU 7700FR-C frame and a 7700FC VistaLINK® Frame Controller module in slot 1 of the frame
- Local display of optical signal strength, video, audio, and data presence, video and AES formats, EDH errors, GPI and GPO status
- Automatic coaxial input equalization to 300m at 270Mb/s (Belden 1694A)
- Fully hot-swappable from front of frame with no fiber disconnect/reconnect required
- Bi-directional optical input/output
- Accepts any wavelength in the 1270nm to 1610nm range
- Optical output wavelengths of 1310nm, 1550nm, and up to sixteen CWDM wavelengths (ITU-T G.694.2 compliant)
- DWDM wavelengths (ITU-T G.694.1 compliant) also available
- Supports multi-mode and single mode fiber optic cable

7707MT Application Configurations

FIBER TYPE	FIBERS	OPTICAL/LINK BUDGET	RECEIVE SIDE		TRANSMIT SIDE		DESCRIPTION
			ORDERING PRODUCT INFO	TX POWER	ORDERING PRODUCT INFO	RX SENSITIVITY	
Multi-Mode	2	< 3km	7707MT13-F2	-7dBm	7707MR13-F2	-28dBm	1310nm on Tx & Rx fibers
Single-Mode	2	21dB/60km	7707MT13-F2	-7dBm	7707MR13-F2	-28dBm	1310nm on Tx & Rx fibers
Single-Mode	1 (WDM)	25dB/71km	7707MT15-W	-1dBm	7707MR13M-W	-26dBm	1310nm/1550nm, WDM, bi-directional on one fiber
Single-Mode	1 (CWDM)	24dB/96km**	7707MTxx-F2	0dBm	7707MRxx-F2	-28dBm	Different CWDM wavelengths on Tx & Rx, with 8 channel CWDM Mux/Demux**
Single-Mode	1 (DWDM)	30dB/120km***	7707MTDxxx-F2	+7dBm	7707MRDxxx-F2	-28dBm	Different DWDM wavelengths on Tx & Rx, with 8 channel DWDM Mux/Demux***

**Assumes 8 Ch CWDM Mux/Demux loss of 3.5dB
***Assumes 8 Ch DWDM Mux/Demux loss of 5dB

Fiber loss= 0.35/0.25dB per km @ 1310nm/1550nm

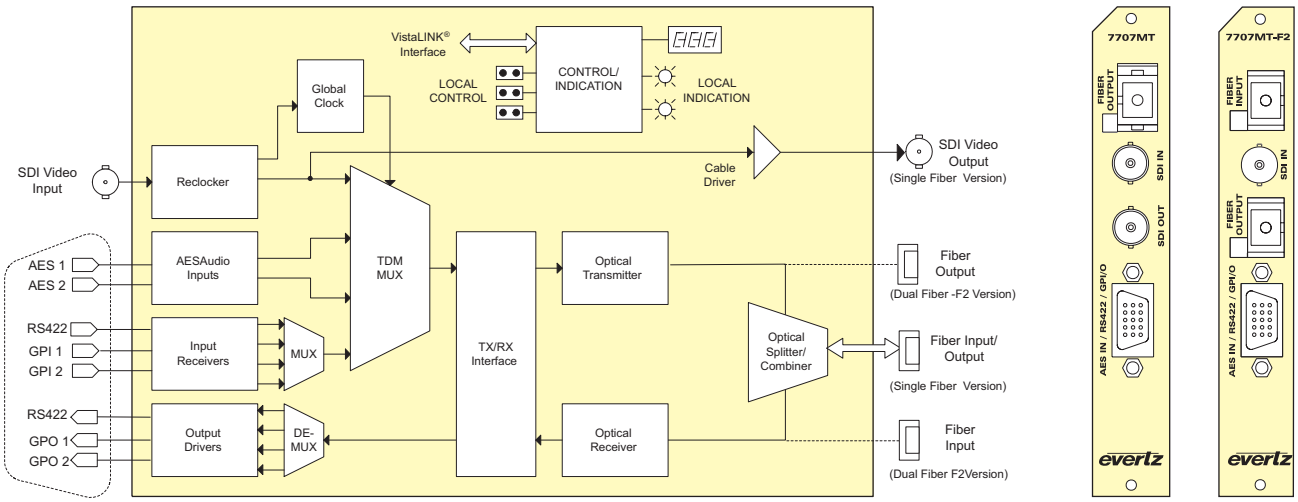

Specifications

Serial Video Input:

Standard:	SMPTE 259M-C, SMPTE 305M
Connector:	1 BNC per IEC 60169-8 Amendment 2
Equalization:	Automatic to 300m @ 270Mb/s with Belden 1694A or equivalent cable
Return Loss:	> 15dB up to 270Mb/s

Serial Video Output (Not available on dual fiber '-F2' version):

Number of Outputs:	1 Per Card reclocked
Connector:	BNC per IEC 60169-8 Amendment 2
Signal Level:	800mV nominal
DC Offset:	0V ±0.5V
Rise and Fall Time:	900ps nominal
Overshoot:	< 10% of amplitude
Return Loss:	> 15dB at 270Mb/s
Wide Band Jitter:	< 0.2 UI

AES Audio Inputs:

Standard:	
Unbalanced:	SMPTE 276M
Balanced:	AES3-1992
Other:	Dolby E compatible
Number of Inputs:	2 (Jumper selectable for balanced or unbalanced input)
Connector:	4 pins on female high density DB-15
Signal Level:	
Unbalanced:	1V p-p ±0.1V
Balanced:	2 to 7V p-p with Level Jumper set to HI, 1 to 2V p-p with level jumper set to LO
Equalization:	500m @ 48kHz with Belden 1800B or equivalent cable
Resolution:	Up to 24 bits
Sampling Rate:	32, 44.1, 48kHz
Intrinsic Jitter:	< 20ns
Impedance:	
Unbalanced:	75Ω
Balanced:	110Ω

Serial Data Ports:

Number of Ports:	1 RS-422 or 2 RS-232 - Jumper Selectable
Connector:	4 pins (plus ground) on female high density DB-15
Baud Rate:	Up to 3Mb/s (Determined by incoming data)

General Purpose Inputs:

Number of Inputs:	2
Type:	Opto-isolated, active low with internal pull-ups to +5V or +12V (jumper selectable)
Connector:	2 pins (plus ground) on female high density DB-15
Signal Drive Level:	Open or closure to ground

General Purpose Outputs:

Number of Outputs:	2
Type:	"Dry Contact" relay closure
Connector:	2 pins per output on female high density DB-15
Signal Level:	Normally Closed or Normally Open (jumper settable)

Optical Input/Output:

Number:	1 (Single fiber version) 2 (Dual fiber -'F2' version)
Connector:	Female SC/PC, ST/PC or FC/PC
Return Loss:	> 20dB
Rise and Fall Time:	200ps nominal
Max. Input Power:	0 dBm
Input Wavelengths:	1270nm to 1610nm
Input Optical Sensitivity:	See Application Configurations Chart
Output Wavelengths:	See Ordering Information
Output Power:	See Application Configurations Chart

System Performance (7707MT + 7707MR):

Video Input To Output Delay:	< 1.5µs
Audio to Video delay:	< 1µs with SoftSwitch™ disabled on 7707MR < 2ms with SoftSwitch™ enabled on 7707MR

Electrical:

Voltage:	+12V DC
Power:	12W (Non DWDM), 14W (DWDM)

Physical:

Number of slots:	1

Compliance:

Electrical Safety:	CSA Listed to UL 60065-03, IEC 60065 Complies with CE Low voltage Directive
Laser Safety:	Class 1 laser product Complies with 24 CFR 1040.10 and 1040.11 IEC 60825-1
EMI/RFI:	Complies with FCC Part 15, Class A EU EMC directive

Ordering Information

7707MT13-F2	SDI, 2 AES, Bi-directional RS232/422, GPI/O Fiber Transmitter dual fiber, 1310nm FP TX & RX, VistaLINK®
7707MT15-W	SDI, 2 AES, Bi-directional RS232/422, GPI/O Fiber Transmitter single fiber, WDM, 1550nm DFB TX, RX on 1310nm, VistaLINK®

For CWDM, please refer to the end of the fiber section for ordering information

7707MTxx-F2	SDI, 2 AES, Bi-directional RS232/422, GPI/O Fiber Transmitter dual fiber, CWDM TX, VistaLINK®

For DWDM, please refer to the end of the fiber section for ordering information

7707MTDxxx-F2	SDI, 2 AES, Bi-directional RS232/422, GPI/O Fiber Transmitter dual fiber, DWDM Laser, VistaLINK®

Ordering Options	Rear Plate and Fiber Connector must be specified at time of order Eg: Model +SC +3RU

Rear Plate Suffix

+3RU	3RU Rear Plate for use with 7700FR-C Multiframe
+1RU	1RU Rear Plate for use with 7701FR Multiframe
+SA	Standalone Enclosure Rear Plate

Connector Suffix

+SC	SC/PC
+ST	ST/PC
+FC	FC/PC

Accessories

7707MX-BHP-15	Bulkhead Breakout Panel for 15 x 7707MT cards (includes 15 3ft cables)
7707MX-BHP-15-B	Bulkhead Breakout Panel for 15 x 7707MT cards (includes 15 3ft cables) for balanced audio only
7707MX-BHP-1	Bulkhead Breakout Panel for 1 x 7707MT card (includes 1 3ft cable)

Enclosures

7700FR-C	3RU Multiframe which holds up to 15 single slot modules
7701FR	1RU Multiframe which holds up to 3 single or dual slot modules
S7701FR	Standalone enclosure

7707MR

SDI, 2 AES Audio, Bi-directional RS-232/422, 2 GPI & 2 GPO, Fiber Receiver

The 7707MR Multi-Signal Fiber Receiver is a VistaLINK® enabled fiber optic receiver for SDI Video, AES Audio, RS422 control, and GPI/O signals. This single card module demultiplexes one uni-directional SDI Video, two uni-directional AES Audio, one bi-directional RS422 and two bi-directional GPIs and GPOs that have been Time Domain Multiplexed (TDM) by the companion 7707MT Multi-Signal Fiber Transmitter module. Evertz patent pending SoftSwitch™ technology is applied to the received signal to ensure virtually glitch free AES Audio output signals when upstream SDI or AES feeds are switched. The 7707MR and companion 7707MT will transparently pass incoming SDI video feeds with embedded AES audio or any other data in the horizontal or vertical ancillary data space. Minimal Audio to Video latency over the transport interface is also achieved.

The fiber output is available in an assortment of optical wavelengths, accommodating 1310/1550nm, CWDM and DWDM transmission schemes.

The 7707MR occupies one card slot and can be housed in either a 1RU frame which will hold up to 3 modules, a 3 RU frame which will hold up to 15 modules and a standalone enclosure which will hold 1 module.

Features & Benefits

- SDI Video, 2 AES Audio, 1 bi-directional RS232/422 and 2 GPI/O fiber optic receiver
- Supports 525 or 625 line 4:2:2 component SDI signals
- Supports SDTi signals
- Supports 32, 44.1, 48kHz AES audio
- Dolby E compatible
- Supports bi-directional RS422 rates up to 3Mb/s
- Incorporates Evertz SoftSwitch™ (Patent Pending) technology for virtually glitch-free AES Audio outputs when upstream SDI or AES feeds are switched
- User selectable SoftSwitch™ bypass
- Minimal Audio to Video latency
- Output AES "Mute" on loss of fiber optic input signal or AES feed to upstream 7707MT multiplexer
- Output Video "Black" or "Blue" (selectable) on loss of video input signal
- Signal transport over fiber uninterrupted by loss of input SDI, AES, Serial Data or GPIO feeds
- SDI video regeneration for jitter removal
- Comprehensive signal and card status monitoring via four digit card edge display or remotely through SNMP and VistaLINK®
- VistaLINK® capability is available when modules are used with the 3RU 7700FR-C frame and a 7700FC VistaLINK® Frame Controller module in slot 1 of the frame
- Local display of optical signal strength, video, audio and data presence, video and AES formats, EDH errors, GPI and GPO status
- Fully hot-swappable from front of frame with no fiber disconnect/reconnect required
- Bi-directional optical input/output
- Accepts any wavelength in the 1270nm to 1610nm range
- Optical output wavelengths of 1310nm, 1550nm, and up to sixteen CWDM wavelengths (ITU-T G.694.2 compliant)
- DWDM wavelengths (ITU-T G.694.1 compliant) also available
- Supports single-mode and multi mode fiber optic cable

7707MR Application Configurations

FIBER TYPE	FIBERS	OPTICAL/LINK BUDGET	TRANSMIT SIDE		RECEIVE SIDE		DESCRIPTION
			ORDERING PRODUCT INFO	TX POWER	ORDERING PRODUCT INFO	RX SENSITIVITY	
Multi-Mode	2	< 3km	7707MT13-F2		7707MR13-F2	-28dBm	1310nm on Tx & Rx fibers
Single-Mode	2	21dB/60km	7707MT13-F2	-7dBm	7707MR13-F2	-28dBm	1310nm on Tx & Rx fibers
Single-Mode	1 (WDM)	25dB/71km	7707MT15-W	-1dBm	7707MR13M-W	-26dBm	1310nm/1550nm, WDM, bi-directional on one fiber
Single-Mode	1 (CWDM)	24dB/96km**	7707MTxx-F2	0dBm	707MRyy-F2	-28dBm	Different CWDM wavelengths for Tx & Rx, with 8 channel CWDM Mux/Demux**
Single-Mode	1 (DWDM)	30dB/120km***	7707MTDxxx-F2	+7dBm	7707MRDyyy-F2	-28dBm	Different DWDM wavelengths for Tx & Rx, with 8 channel DWDM Mux/Demux***

**Assumes 8 Ch CWDM Mux/Demux loss of 3.5dB
***Assumes 8 Ch DWDM Mux/Demux loss of 5dB

Fiber loss= 0.35/0.25dB per km @ 1310nm/1550nm

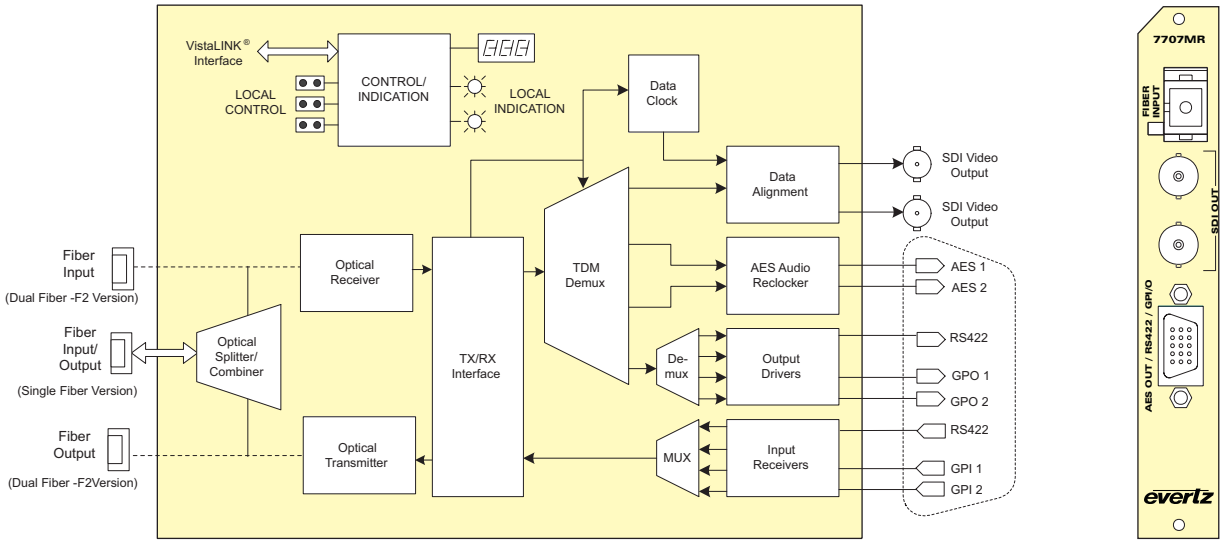

Specifications

Optical Input/Output:
Number: 1 (Single fiber version)
2 (Dual fiber - F2 version)
Connector: Female SC/PC, ST/PC or FC/PC
Return Loss: > 20dB
Rise and Fall Time: 200ps nominal
Max. Input Power: 0 dBm
Input Wavelengths: 1270nm-1610nm
Input Optical Sensitivity:
See Application Configuration Chart
Output Wavelengths: See Ordering Information
Output Power: See Application Configuration Chart

Serial Video Outputs:
Number of Outputs: 2 regenerated (1 output on -F2 versions)
Standard: SMPTE 259M-C
Connector: BNC per IEC 60169-8 Amendment 2
Signal Level: 800mV nominal
DC Offset: 0V ±0.5V
Rise and Fall Time: 900ps nominal
Overshoot: < 10% of amplitude
Return Loss: > 15dB at 270Mb/s
Wide Band Jitter: < 0.15 UI

AES Audio Outputs:
Standard
Unbalanced AES: SMPTE 276M
Balanced: AES3-1992
Other: Dolby E compatible
Number of Outputs: 2 regenerated (Jumper selectable for balanced or unbalanced)
Connector: 4 pins on female high density DB-15
Signal Level: Unbalanced - 1V p-p, Balanced - 5V p-p
Resolution: Up to 24 bits
Sampling Rate: 32, 44.1, 48kHz
Intrinsic Jitter: < 20ns
Impedance: Unbalanced - 75Ω
Balanced - 110Ω

Serial Data Ports:
Number of Ports: 1 RS-422 or 2 RS-232 - Jumper Selectable
Connector: 4 pins (plus ground) on female high density DB-15
Baud Rate: Up to 3Mb/s RS-422 (Determined by incoming data)

General Purpose Inputs:
Number of Inputs: 2
Type: Opto-isolated, active low with internal pull-ups to +5V or +12V (jumper selectable)
Connector: 2 pins (plus ground) on female high density DB-15
Signal Drive Level: Open or closure to ground

General Purpose Outputs:
Number of Outputs: 2
Type: "Dry Contact" relay closure
Connector: 2 pins per output on female high density DB-15
Signal Level: Normally Closed or Normally Open (jumper settable)

System Performance (7707MR + 7707MT):
Video Input To Output Delay:
< 1.5µs
Audio to Video delay: < 1µs with SoftSwitch™ disabled
< 2ms with SoftSwitch™ enabled

Electrical:
Voltage: +12V DC
Power: 12W (Non DWDM) 14W (DWDM)

Physical:
Number of slots: 1

Compliance:
Electrical Safety: CSA Listed to UL 60065-03, IEC 60065
Complies with CE Low voltage Directive
Laser Safety: Class 1 laser product
Complies with 24 CFR 1040.10 and 1040.11
IEC 60825-1
EMI/RFI: Complies with FCC Part 15, Class A
EU EMC directive

Ordering Information

7707MR13-F2 SDI, 2 AES, Bi-directional RS232/422, GPI/O Fiber Receiver, dual fiber, 1310nm FP TX & RX, VistaLINK®
7707MR13M-W SDI, 2 AES, Bi-directional RS232/422, GPI/O Fiber Receiver, single fiber, WDM, 1310nm FP TX, RX on 1550nm, VistaLINK®

For CWDM, please refer to the end of the fiber section for ordering information
7707MRxx-F2 SDI, 2 AES, Bi-directional RS232/422, GPI/O Fiber Receiver, dual fiber, CWDM TX, VistaLINK®

For DWDM, please refer to the end of the fiber section for ordering information
7707MRDxxx-F2 SDI, 2 AES, Bi-directional RS232/422, GPI/O Fiber Receiver, dual fiber, DWDM Laser, VistaLINK®

Ordering Options Rear Plate and Fiber Connector must be specified at time of order
Eg: Model +SC +3RU

Rear Plate Suffix:
+3RU 3RU Rear Plate for use with 7700FR-C Multiframe
+1RU 1RU Rear Plate for use with 7701FR Multiframe
+SA Standalone Enclosure Rear Plate

Connector Suffix:
+SC SC/PC
+ST ST/PC
+FC FC/PC

Accessories:
7707MX-BHP-15 Bulkhead Breakout Panel for 15x7707MR cards (includes 15 3ft cables)
7707MX-BHP-15-B Bulkhead Breakout Panel for 15x7707MR cards (includes 15 3ft cables) for balanced audio only
7707MX-BHP-1 Bulkhead Breakout Panel for 1x7707MR card (includes 1 3ft cable)

Enclosures:
7700FR-C 3RU Multiframe which holds up to 15 single slot modules
7701FR 1RU Multiframe which holds up to 3 single or dual slot modules
S7701FR Standalone enclosure

7707MB

Bi-directional Transceiver for 1 SDI, 2 AES, RS-232/422, 2 GPI/O

The 7707MB is a VistaLINK® capable fiber optic transceiver for SDI Video, AES Audio, RS232/422 and GPI/O signals. This single card module transports one bi-directional SDI Video, two bi-directional AES Audio, one bi-directional RS-232/422 and two bi-directional GPI/Os over a single or dual fiber optic cable.

The 7707MB will transparently pass incoming SDI video feeds with embedded AES audio or any other data in the horizontal or vertical ancillary data space. Minimal Audio to Video latency over the transport interface is also achieved.

The fiber output is available in 1310nm, 1550nm, CWDM and DWDM wavelengths.

The 7707MB can be housed in either a 1RU frame which will hold up to 3 modules, or a 3RU frame which will hold up to 15 modules or a standalone enclosure which will hold 1 module.

Features & Benefits

- Bi-directional fiber optic transceiver for 1 SDI Video, 2 AES Audio, 1 RS-232/422 and 2 GPI/O
- Supports 525 or 625 line 4:2:2 component SDI signals
- Supports 32, 44.1, 48kHz AES audio
- Dolby E compatible
- Supports bi-directional RS422 rates up to 3Mb/s
- Low Audio to Video latency
- Signal transport over fiber uninterrupted by loss of input SDI, AES or Serial Data feeds
- Built-in jitter attenuation
- VistaLINK® capability is available when modules are used with the 3RU 7700FR-C frame and a 7700FC VistaLINK® Frame Controller module in slot 1 of the frame
- Comprehensive signal and card status monitoring via four digit card edge display or remotely through SNMP and VistaLINK®
- Local display of optical signal strength, video, audio, data presence, video and AES formats and EDH errors
- Fully hot-swappable from front of frame with no fiber disconnect/reconnect required
- Bi-directional optical input/output
- Accepts any wavelength in the 1270nm to 1610nm range
- Optical output wavelengths of 1310nm, 1550nm and up to sixteen CWDM wavelengths (ITU-T G.694.2 compliant)
- DWDM wavelengths (ITU-T G.694.1 compliant) also available
- Supports single-mode and multi-mode fiber optic cable

7707MB Application Configurations

FIBER TYPE	FIBERS	OPTICAL/LINK BUDGET	TRANSMIT SIDE		RECEIVE SIDE		DESCRIPTION
			ORDERING PRODUCT INFO	TX POWER	ORDERING PRODUCT INFO	RX SENSITIVITY	
Multi-Mode	2	< 3km	7707MB13-F2	-7dBm	7707MB13-F2	-28dBm	1310nm on Tx & Rx fibers
Single-Mode	2	21dB/60km	7707MB13-F2	-7dBm	7707MB13-F2	-28dBm	1310nm on Tx & Rx fibers
Single-Mode	1 (WDM)	25dB/71km	7707MB13M-W	-1dBm	7707MB15-W	-26dBm	1310nm/1550nm, WDM, bi-directional on one fiber
Single-Mode	1 (CWDM)	24dB/96km**	7707MBxx-F2	0dBm	7707MByy-F2	-28dBm	Different CWDM wavelengths for Tx & Rx, with 8 channel CWDM Mux/Demux**
Single-Mode	1 (DWDM)	30dB/120km***	7707MBDxxx-F2	7dBm	7707MBDyyy-F2	-28dBm	Different DWDM wavelengths for Tx & Rx, with 8 channel DWDM Mux/Demux***

**Assumes 8 Ch CWDM Mux/Demux loss of 3.5dB
***Assumes 8 Ch DWDM Mux/Demux loss of 5dB

Fiber loss= 0.35/0.25dB per km @ 1310nm/1550nm

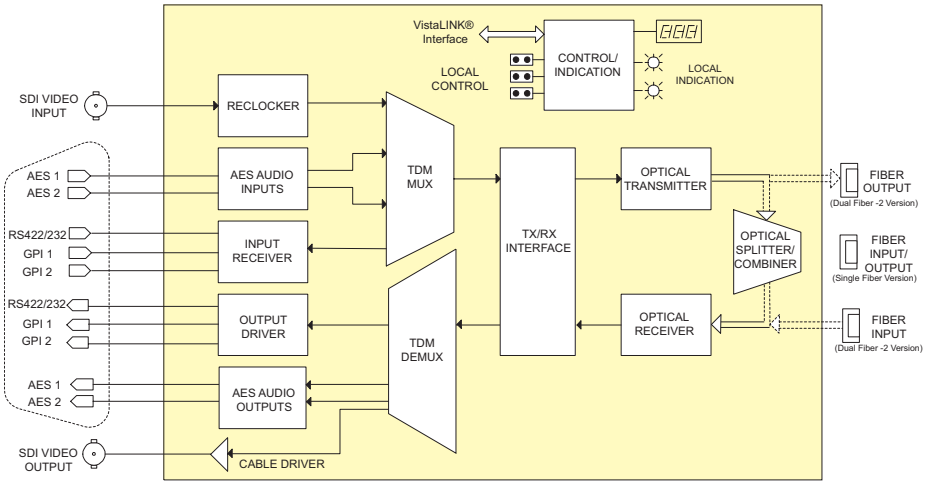

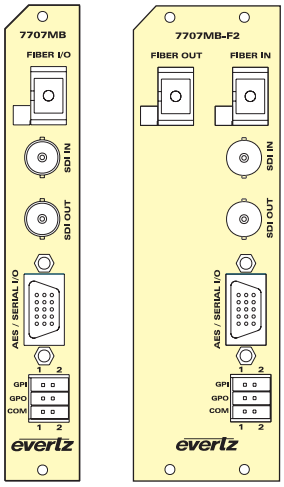

Specifications

Serial Video Input:
Standard: SMPTE 259M-C, 525 or 625 line component, SMPTE 305M
Connector: 1 BNC per IEC 60169-8 Amendment 2
Equalization: Automatic to 250m @ 270Mb/s with Belden 8281 or equivalent cable
Return Loss: > 15dB up to 270Mb/s

Serial Video Output:
Number of Outputs: 1
Standard: SMPTE 259M-C, SMPTE 305M
Connector: BNC per IEC 60169-8 Amendment 2
Signal Level: 800mV nominal
DC Offset: 0V ±0.5V
Rise and Fall Time: 900ps nominal
Overshoot: < 10% of amplitude
Return Loss: > 15dB at 270Mb/s
Wide Band Jitter: < 0.2 UI

Optical Input/Output:
Number: 1 (single fiber version)
2 (dual fiber -F2 version)
Connector: Female SC/PC, ST/PC or FC/PC
Return Loss: > 14dB
Max. Input Power: 0dBm
Input Wavelength: 1270nm to 1610nm
Input Optical Sensitivity: See Application Configurations Chart
Output Jitter: < 0.2 UI
Output Wavelengths: See Ordering Information
Output Power: See Application Configurations Chart

AES Audio Inputs:
Standard:
Unbalanced AES: SMPTE 276M
Balanced: AES3-1992
Other: Dolby E compatible
Number of Inputs: 2 (Jumper selectable for balanced or unbalanced)
Connector: 4 pins on female high density DB-15
Signal Level:
Unbalanced: 1V p-p ±0.1V
Balanced: 2 to 7V p-p with Level Jumper set to HI, 1 to 2V p-p with level jumper set to LO
Equalization: 300m @ 48kHz with Belden 1800B or equivalent cable
Resolution: Up to 24 bits
Sampling Rate: 32, 44.1, 48kHz
Impedance: Unbalanced - 75Ω, Balanced - 110Ω

AES Audio Outputs:
Standard
Unbalanced: SMPTE 276M
Balanced: AES3-1992
Other: Dolby E compatible
Number of Outputs: 2 regenerated (Jumper selectable for balanced or unbalanced)
Connector: 4 pins on female high density DB-15
Signal Level:
Unbalanced: 1V p-p
Balanced: 5V p-p
Resolution: Up to 24 bits
Sampling Rate: 32, 44.1, 48kHz
Intrinsic Jitter: < 20ns
Impedance: Unbalanced - 75Ω, Balanced - 110Ω

General Purpose Inputs:
Number of Inputs: 2
Type: Opto-isolated, active low with internal pull-ups to +5V or +12V (jumper selectable)
Connector: 6-pin removable terminal block
Signal Drive Level: Open or closure to ground

General Purpose Outputs:
Number of Outputs: 2
Type: "Dry Contact" relay closure
Connector: 6-pin removable terminal block
Signal Level: Normally Closed or Normally Open (jumper settable)

Serial Data Port:
Number of Ports: 1 RS-422 or 2 RS-232 - Jumper Selectable
Connector: 4 pins (plus ground) on female high density DB-15
Baud Rate: Up to 3Mb/s RS-422 (Determined by incoming data)

System Performance (7707MB pair):
Video Input To Output Delay: < 2µs
Audio to Video delay: < 1µs

Electrical:
Voltage: +12V DC
Power: 12W (Non-DWDM) 14W (DWDM)

Physical:
Number of slots: 1 (7707MB)
2 (7707MB-F2)

Compliance:
Electrical Safety: CSA Listed to UL 60065-03, IEC 60065
Complies with CE Low voltage Directive
Laser Safety: Class 1 laser product
Complies with 24 CFR 1040.10 and 1040.11
IEC 60825-1
EMI/RFI: Complies with FCC Part 15, Class A
EU EMC directive

Ordering Information

7707MB13M-W Bi-directional SDI, 2 AES, RS232/422, GPI/O Fiber Transceiver, single fiber, WDM, 1310nm FP TX, RX on 1550nm, VistaLINK® use with 7707MB15-W
7707MB15-W Bi-directional SDI, 2 AES, RS232/422, GPI/O Fiber Transceiver, single fiber, WDM, 1550nm DFB TX, RX on 1310nm, VistaLINK® use with 7707MB13M-W
7707MB13-F2 Bi-directional SDI, 2 AES, RS232/422, GPI/O Fiber Transceiver, dual fiber, 1310nm FP TX & RX, VistaLINK®

For CWDM, please refer to the end of the fiber section for ordering information
7707MBxx-F2 Bi-directional SDI, 2 AES, RS232/422, GPI/O Fiber Transceiver, dual fiber, CWDM TX, VistaLINK®

For DWDM, please refer to the end of the fiber section for ordering information
7707MBDxxx-F2 Bi-directional SDI, 2 AES, RS232/422, GPI/O Fiber Transceiver, dual fiber, DWDM Laser, VistaLINK®

Ordering Options Rear Plate and Fiber Connector must be specified at time of order
Eg: Model +SC +3RU

Rear Plate Suffix
+3RU 3RU Rear Plate for use with 7700FR-C Multiframe
+1RU 1RU Rear Plate for use with 7701FR Multiframe
+SA Standalone Enclosure Rear Plate

Connector Suffix
+SC SC/PC
+ST ST/PC
+FC FC/PC

Accessories:
7707MB-BHP-15 Bulkhead Breakout Panel for 15 x 7707MB cards (includes 15 3ft cables)
7707MB-BHP-15-B Bulkhead Breakout Panel for 15 x 7707MB cards (includes 15 3ft cables) for balanced audio only
7707MX-BHP-1 Bulkhead Breakout Panel for 1 x 7707MB card (includes 1 3ft cable)

Enclosures
7700FR-C 3RU Multiframe which holds up to 15 single slot modules
7701FR 1RU Multiframe which holds up to 3 single or dual slot modules
S7701FR Standalone enclosure

7705EO-HD

HDTV Electrical to Optical Converter, 19.4Mb/s to 1.5Gb/s

Features & Benefits

- Operation from 19.4Mb/s to 1.5Gb/s
  - Reclocking for SMPTE 292M (1.485Gb/s)
  - Non-reclocking mode for all other rates from 19.4Mb/s to 1.5Gb/s including SMPTE 259M, SMPTE 305M, SMPTE 310M, M2S, DVB-ASI, etc.
- Supports single-mode and multi-mode fiber optic cable
- Fully hot-swappable from front of frame with no fiber or BNC disconnect/reconnect required
- Can be housed in either a 1RU frame that will hold up to 3 modules, a 3RU frame that will hold up to 15 modules or a standalone frame which will hold 1 module
- VistaLINK® capability is available when modules are used with the 3RU 7700FR-C frame and a 7700FC VistaLINK® Frame Controller module in slot 1 of the frame
- Comprehensive signal and card status monitoring via four digit card edge display or remotely through SNMP and VistaLINK®

Input
- Automatic input cable equalization to 130m (Belden 1694A)

Outputs
- Two serial digital BNC outputs for loop-through or monitoring
- One fiber output available in 1310nm or 1550nm
- Wideband Jitter < 0.2 UI (reclocked)
- SC/PC, ST/PC, FC/PC connector options

Status LEDs
- Signal presence indication
- Maximum equalization warning indication
- Module status indication

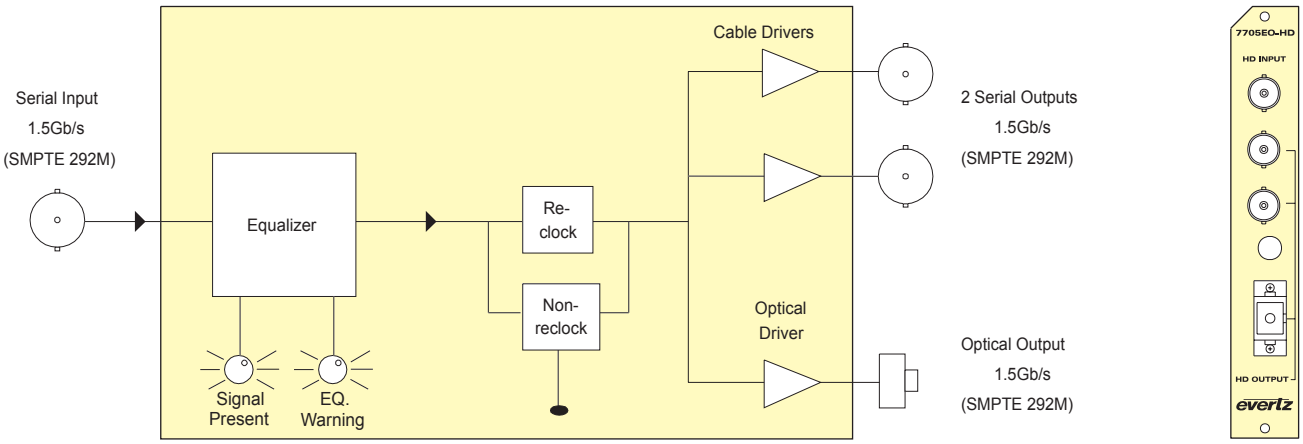

*Note: Non-reclock Mode will operate 19.4 Mb/s to 1.5 Gb/s.

Specifications

Standards: SMPTE 292M, 259M, 297M, 305M, 310M, M2S, DVB-ASI, DVB-SSI, and other bi-level Telecom/Datacom rates from 19.4Mb/s to 1.5Gb/s

Serial Video Input:
Connector: 1 BNC per IEC 60169-8 Amendment 2
Equalization: Automatic to 130m with Belden 1694A (or equivalent)
Return Loss: > 15dB to 1GHz, > 12dB to 1.5GHz

Serial Video Outputs:
Number of Outputs: 2 Reclocked outputs
Connector: BNC per IEC 60169-8 Amendment 2
Signal Level: 800mV nominal
DC Offset: 0V ±0.5V
Rise and Fall Time: 200ps nominal
Overshoot: < 10% of amplitude
Return Loss: > 15dB to 1GHz, > 12dB to 1.5GHz
Jitter: < 0.2 UI Reclocked

Optical Outputs:
Number of Outputs: 1
Connector: SC/PC, ST/PC, FC/PC female housing
Return Loss: > 14dB
Rise and Fall Time: 270ps nominal
Jitter: < 0.2 UI (reclocked)
Nominal Wavelength: 1310nm, 1550nm

Optical Power:
1310nm FP: -7dBm ±1dBm
1310nm/1550nm DFB: 0 dBm ±1dBm

Electrical:
Voltage: +12V DC
Power: 6W
Safety: Complies with EU safety Directive
EMI/RFI: Complies with FCC Part 15, Class A EU EMC Directive

Physical:
Number of Slots: 1

Compliance:
Electrical Safety: CSA Listed to UL 60065-03, IEC 60065
Complies with CE Low voltage Directive
Laser Safety: Class 1 laser product
Complies with 24 CFR 1040.10 and 1040.11
IEC 60825-1
EMI/RFI: Complies with FCC Part 15, Class A
EU EMC directive

Ordering Information

7705EO13-HD	HDTV Electrical to Optical Converter, 19.4Mb/s to 1.5 Gb/s, 1310nm, FP Laser
7705EO13-HD-L	HDTV Electrical to Optical Converter, 19.4Mb/s to 1.5 Gb/s, 1310nm, DFB Laser
7705EO15-HD	HDTV Electrical to Optical Converter, 19.4Mb/s to 1.5 Gb/s, 1550nm, DFB Laser

Ordering Options Rear Plate and Fiber Connector must be specified at time of order
Eg: Model +SC +3RU

Rear Plate Suffix

+3RU	3RU Rear Plate for use with 7700FR-C Multiframe
+1RU	1RU Rear Plate for use with 7701FR Multiframe
+SA	Standalone Enclosure Rear Plate

Connector Suffix

+SC	SC/PC
+ST	ST/PC
+FC	FC/PC

Accessories:
Fiber Optic Patch Cable

CB-FP1M-SCPC	Single mode fiber cable, 1m, SC/PC male termination
CB-FP1M-STPC	Single mode fiber cable, 1m, ST/PC male termination
CB-FP5M-SCPC	Single mode fiber cable, 5m, SC/PC male termination
CB-FP5M-STPC	Single mode fiber cable, 5m, ST/PC male termination
CB-FP10M-SCPC	Single mode fiber cable, 10m, SC/PC male termination
CB-FP10M-STPC	Single mode fiber cable, 10m, ST/PC male termination

Enclosures

7700FR-C	3RU Multiframe which holds up to 15 single slot modules
7701FR	1RU Multiframe which holds up to 3 single or dual slot modules
S7701FR	Standalone enclosure

Features & Benefits

- Operation from 19.4Mb/s to 1.5Gb/s
  - Reclocking for SMPTE 292M (1.485Gb/s)
  - Non-reclocking mode for all other rates from 19.4Mb/s to 1.5Gb/s including SMPTE 259M, SMPTE 305M, SMPTE 310M, M2S, DVB-ASI, etc.
- Supports single-mode and multi-mode fiber optic cable
- Fully hot-swappable from front of frame with no fiber or BNC disconnect/reconnect required
- Can be housed in either a 1RU frame that will hold up to 3 modules, a 3RU frame that will hold up to 15 modules or a standalone frame which will hold 1 module
- Comprehensive signal and card status monitoring via four digit card edge display or remotely through SNMP and VistaLINK®
- VistaLINK® capability is available when modules are used with the 3RU 7700FR-C frame and a 7700FC VistaLINK® Frame Controller module in slot 1 of the frame

Input
- Optical input range from 1270nm to 1610nm
- Input sensitivity up to -23dBm
- SC/PC, ST/PC, FC/PC connector options

Outputs
- Three serial digital BNC outputs for fan-out, loop-through or monitoring
- Wideband Jitter < 0.2 UI (reclocked)

Status LEDs
- Signal presence indication
- Module status indication

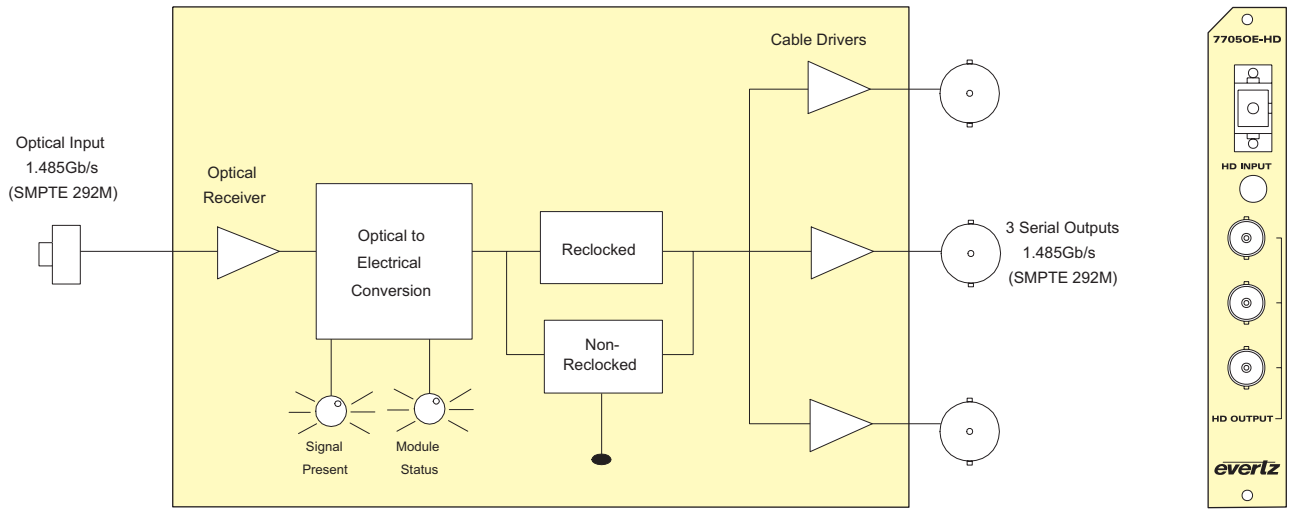

Specifications

Standard: SMPTE 292M, 259M, 297M, 305M, 310M, M2S, DVB-ASI, and other Telecom/Datacom standards involving data rates from 19.4Mb/s to 1.5Gb/s

Optical Input:
Number of Inputs: 1
Connector: SC/PC, ST/PC, FC/PC Female housing
Operating Wavelength: 1270nm to 1610nm
Max. Input Power: -1dBm
Optical Sensitivity: -23dBm

Serial Video Outputs:
Number of Outputs: 3 Reclocked outputs
Connector: BNC per IEC 60169-8 Amendment 2
Signal Level: 800mV nominal
DC Offset: 0V ±0.5V
Rise and Fall Time: 270ps nominal
Overshoot: < 10% of amplitude
Return Loss: > 15dB to 1GHz, > 12dB to 1.5GHz
Jitter: < 0.2 UI Reclocked

Electrical:
Voltage: +12V DC
Power: 6W
EMI/RFI: Complies with FCC Part 15, Class A
EU EMC Directive

Physical:
Number of Inputs: 1

Ordering Information

7705OE-HD	HDTV Optical to Electrical Converter, 19.4Mb/s to 1.5 Gb/s
Ordering Options	Rear Plate and Fiber Connector must be specified at time of order Eg: Model +SC +3RU

Rear Plate Suffix

+3RU	3RU Rear Plate for use with 7700FR-C Multiframe
+1RU	1RU Rear Plate for use with 7701FR Multiframe
+SA	Standalone Enclosure Rear Plate

Connector Suffix

+SC	SC/PC
+ST	ST/PC
+FC	FC/PC

Fiber Optic Patch Cable

CB-FP1M-SCPC	Single mode fiber cable, 1m, SC/PC male termination
CB-FP1M-STPC	Single mode fiber cable, 1m, ST/PC male termination
CB-FP5M-SCPC	Single mode fiber cable, 5m, SC/PC male termination
CB-FP5M-STPC	Single mode fiber cable, 5m, ST/PC male termination
CB-FP10M-SCPC	Single mode fiber cable, 10m, SC/PC male termination
CB-FP10M-STPC	Single mode fiber cable, 10m, ST/PC male termination

Enclosures

7700FR-C	3RU Multiframe which holds up to 15 single slot modules
7701FR	1RU Multiframe which holds up to 3 single or dual slot modules
S7701FR	Standalone enclosure

7707EO-3-HD

Triple HD or SD Electrical to Optical Converter, 19.4Mb/s to 1.485Gb/s

Features & Benefits

- Three independent channels of electrical to optical conversion that support all SMPTE 292M standards at 1.485Gb/s
- Supports all SMPTE 259M standards with operation from 143Mb/s-360Mb/s
- Supports additional standards of SMPTE 305M (SDTi), SMPTE 310M (19.4Mb/s), SMPTE 344M (540Mb/s), M2S and DVB-ASI (270Mb/s)
- Automatic cable equalization to 300m @ 270Mb/s and 75m @ 1.485Gb/s with Belden 1694A (or equivalent) cable
- Fully hot-swappable from front of frame, with no fiber or BNC disconnect/reconnect required
- High density - accommodates up to 45 independent channels of optical conversion, in a single 3RU frame
- Can be housed in either a 1RU frame that will hold up to 3 modules, a 3RU frame that will hold up to 15 modules or a standalone which will hold 1 module
- Signal and card status monitoring via four-digit card-edge display, or remotely through SNMP and VistaLINK® available
- Detection and display of input cable length
- Supports single-mode and multi-mode fiber optic cable
- SC/PC, ST/PC or FC/PC connector options
- Tally output on Frame Status bus upon loss of input signal
- Comprehensive signal and card status monitoring via four digit card edge display or remotely through SNMP and VistaLINK®
- VistaLINK® capability is available when modules are used with the 3RU 7700FR-C frame and a 7700FC VistaLINK® Frame Controller module in slot 1 of the frame

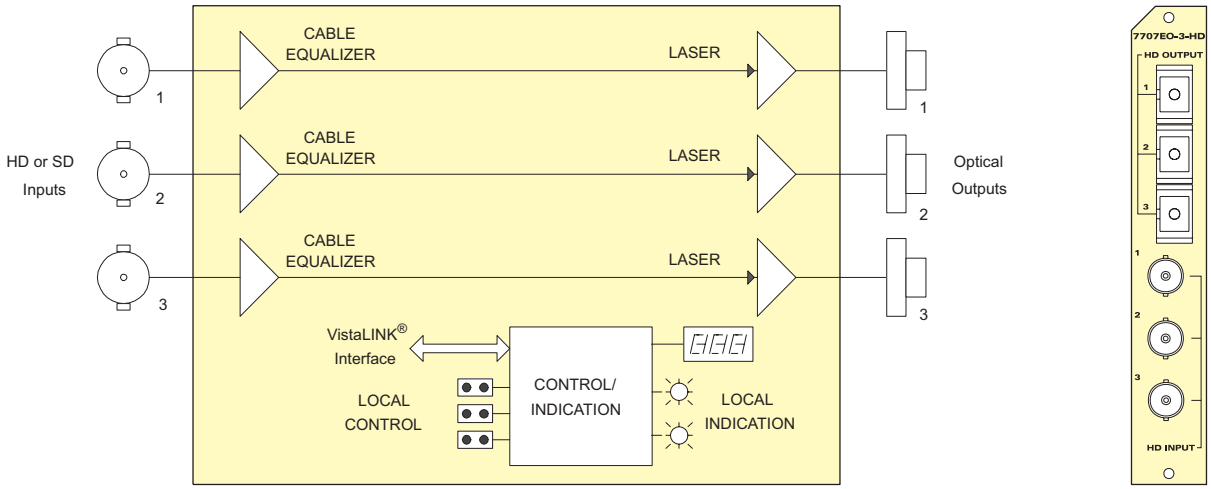

Specifications

Standards: SMPTE 292M, SMPTE 259M A, B, C, D, SMPTE 297M, SMPTE 305M, SMPTE 310M, SMPTE 344M, M2S, DVB-ASI

Serial Video Input:
Number of Inputs: 3 (independent channels)
Connector: 3 BNC inputs per IEC 169-8
Equalization: Automatic to 75m @ HD (1.485Gb/s) and 300m @ SD (270Mb/s) with Belden 1694A (or equivalent)
Return Loss: > 14dB up to 1.5Gb/s

Optical Outputs:
Number of Outputs: 3 (independent channels)
Connector: SC/PC, ST/PC, FC/PC female housing
Return Loss: > 14dB
Rise/Fall Time: 270ps nominal
Jitter: < 0.2 UI
Nominal Wavelength: 1310nm
1550nm
Optical Power: -7dBm ±1dBm @ 1310nm
0dBm ±1dBm @ 1550nm

Electrical:
Voltage: +12V DC
Power: 6W

Physical:
Number of Slots: 1

Compliance:
Electrical Safety: CSA Listed to UL 60065-03, IEC 60065
Complies with CE Low voltage Directive
Laser Safety: Class 1 laser product
Complies with 24 CFR 1040.10 and 1040.11
IEC 60825-1
EMI/RFI: Complies with FCC Part 15, Class A
EU EMC directive

Ordering Information

7707EO13-3-HD	Triple HD or SD Electrical to Optical Converter, 19.4Mb/s or 143Mb/s -1.485Gb/s, 1310nm FP laser, VistaLINK®
7707EO15-3-HD	Triple HD or SD Electrical to Optical Converter, 19.4Mb/s or 143Mb/s -1.485Gb/s, 1550nm DFB laser, VistaLINK®

Ordering Options Rear Plate and Fiber Connector must be specified at time of order
Eg. Model +3RU +SC

Rear Plate Suffix

+3RU	3RU Rear Plate for use with 7700FR-C Multiframe
+1RU	1RU Rear Plate for use with 7701FR Multiframe
+SA	Standalone Enclosure Rear Plate

Connector Suffix

+SC	SC/PC
+ST	ST/PC
+FC	FC/PC

Fiber Optic Patch Cable

CB-FP1M-SCPC	Single mode fiber cable, 1m, SC/PC male termination
CB-FP1M-STPC	Single mode fiber cable, 1m, ST/PC male termination
CB-FP5M-SCPC	Single mode fiber cable, 5m, SC/PC male termination
CB-FP5M-STPC	Single mode fiber cable, 5m, ST/PC male termination
CB-FP10M-SCPC	Single mode fiber cable, 10m, SC/PC male termination
CB-FP10M-STPC	Single mode fiber cable, 10m, ST/PC male termination

Enclosures

7700FR-C	3RU Multiframe, which holds up to 15 single slot modules
7701FR	1RU Multiframe, which holds up to 3 single or dual slot modules
S7701FR	Standalone enclosure

Features & Benefits

- Three independent channels of optical to electrical conversion that support all SMPTE 292M standards at 1.485Gb/s
- Supports reclocking of all SMPTE 259M standards with operation from 143Mb/s-360Mb/s
- Supports reclocking of additional standards of SMPTE 305M (SDTi), SMPTE 344M (540Mb/s), M2S and DVB-ASI (270Mb/s)
- Automatically operates in non-reclocking mode in the presence of rates not supported by reclocking
- Fully hot-swappable from front of frame, with no fiber or BNC disconnect/reconnect required
- High density - accommodates up to 45 independent channels of optical conversion, in a single 3RU frame
- Can be housed in either a 1RU frame that will hold up to 3 modules, a 3RU frame that will hold up to 15 modules or a standalone which will hold 1 module
- Comprehensive signal and card status monitoring via four digit card edge display or remotely through SNMP and VistaLINK®
- VistaLINK® capability is available when modules are used with the 3RU 7700FR-C frame and a 7700FC VistaLINK® Frame Controller module in slot 1 of the frame
- Detection and display of optical input power, and data rate
- Wide range optical input (1270nm-1610nm)
- Supports single-mode and multi-mode fiber optic cable
- SC/PC, ST/PC or FC/PC connector options
- Tally output on Frame Status bus upon loss of input signal

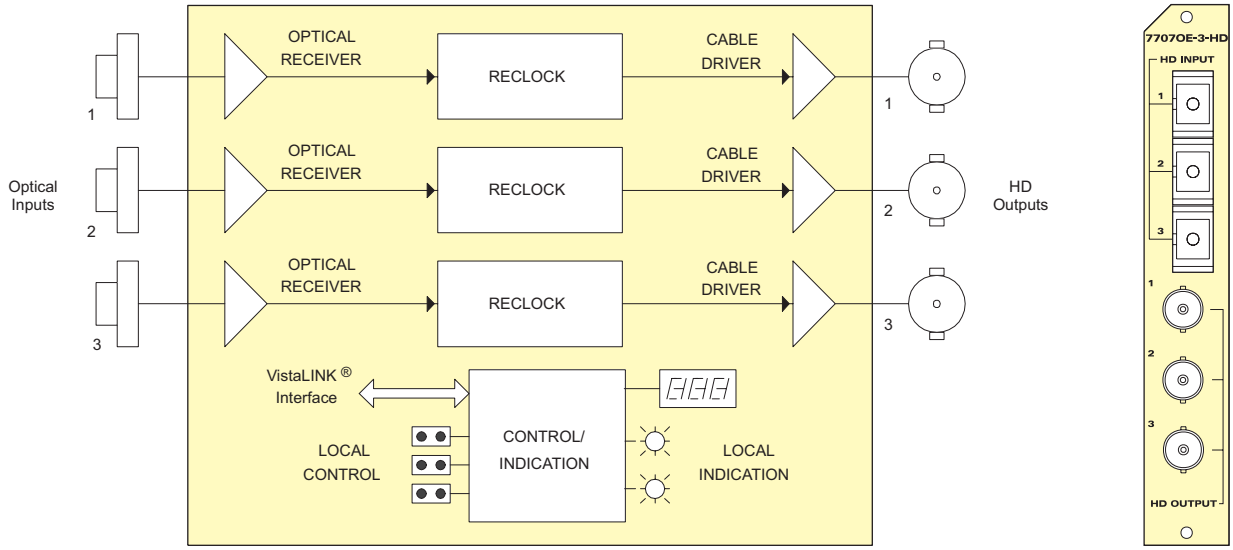

Specifications

Standards: SMPTE 292M, SMPTE 259M-A,B,C,D SMPTE 305M, SMPTE 310M, SMPTE 344M, M2S, DVB-ASI

Optical Inputs:
Number of Inputs: 3 (independent channels)
Connector: SC/PC, ST/PC, FC/PC female housing
Operating Wavelength: 1270nm to 1610nm
Max. Input Power: -1dBm
Optical Sensitivity: -18dBm

Serial Video Outputs:
Number of Outputs: 3 reclocked (independent channels)
Connector: 3 BNC inputs per IEC 169-8
Signal Level: 800mV nominal
DC Offset: 0V ±0.5V
Rise/Fall Time
SD @270Mb/s: 600ps nominal
HD @1.485Gb/s: 150ps nominal
Overshoot: < 10% of amplitude
Return Loss: > 15dB up to 1.5Gb/s
Jitter: < 0.2 UI

Electrical:
Voltage: +12V DC
Power: 6W
EMI/RFI: Complies with FCC Part 15, Class A EU EMC Directive

Physical:
Number of Slots: 1

Ordering Information

7707OE-3-HD Triple HD or SD Optical to Electrical Converter, 19.4Mb/s or 143Mb/s - 1.485Gb/s, VistaLINK®

Ordering Options Rear Plate and Fiber Connector must be specified at time of order Eg: Model +SC +3RU

Rear Plate Suffix
+3RU 3RU Rear Plate for use with 7700FR-C Multiframe
+1RU 1RU Rear Plate for use with 7701FR Multiframe
+SA Standalone Enclosure Rear Plate

Connector Suffix
+SC SC/PC
+ST ST/PC
+FC FC/PC

Fiber Optic Patch Cable
CB-FP1M-SCPC Single mode fiber cable, 1m, SC/PC male termination
CB-FP1M-STPC Single mode fiber cable, 1m, ST/PC male termination
CB-FP5M-SCPC Single mode fiber cable, 5m, SC/PC male termination
CB-FP5M-STPC Single mode fiber cable, 5m, ST/PC male termination
CB-FP10M-SCPC Single mode fiber cable, 10m, SC/PC male termination
CB-FP10M-STPC Single mode fiber cable, 10m, ST/PC male termination

Enclosures
7700FR-C 3RU Multiframe which holds up to 15 single slot modules
7701FR 1RU Multiframe which holds up to 3 single or dual slot modules
S7701FR Standalone enclosure

7707EO-HD

HDTV Electrical to Optical Converter, 19.4Mb/s to 1.5Gb/s

Features & Benefits

- Supports all SMPTE 292M standards at 1.485Gb/s
- Supports all SMPTE 259M standards with operation from 143Mb/s-360Mb/s
- Supports SMPTE 310M (19.4Mb/s), M2S or DVB-ASI (270Mb/s), SMPTE 344M (540Mb/s), and SMPTE 305M (SDTi) rates
- Auto rate selection, indication and reclocking for all SDI and HD-SDI data rates from 143Mb/s to 1.485Gb/s
- Selectable non-reclock mode for other data rates
- Detection and display of equalization strength, video format, and EDH errors (SDI only)
- Automatic coaxial input equalization to 150m for all rates to 1.485Gb/s (Belden 1694A)
- DWDM wavelengths (ITU-T G.694.1 compliant) also available
- Optical output wavelengths of 1310nm, 1550nm, and up to sixteen CWDM wavelengths (ITU-T G.694.2 compliant)
- Supports single-mode and multi-mode fiber optic cable
- Fully hot-swappable from front of frame
- Comprehensive signal and card status monitoring via four digit card edge display or remotely through SNMP and VistaLINK®
- VistaLINK® capability is available when modules are used with the 3RU 7700FR-C frame and a 7700FC VistaLINK® Frame Controller module in slot 1 of the frame
- Occupies one card slot and can be housed in either a 1RU frame which will hold up to three modules, a 3RU frame which will hold up to 15 modules, or a standalone enclosure which will hold one module

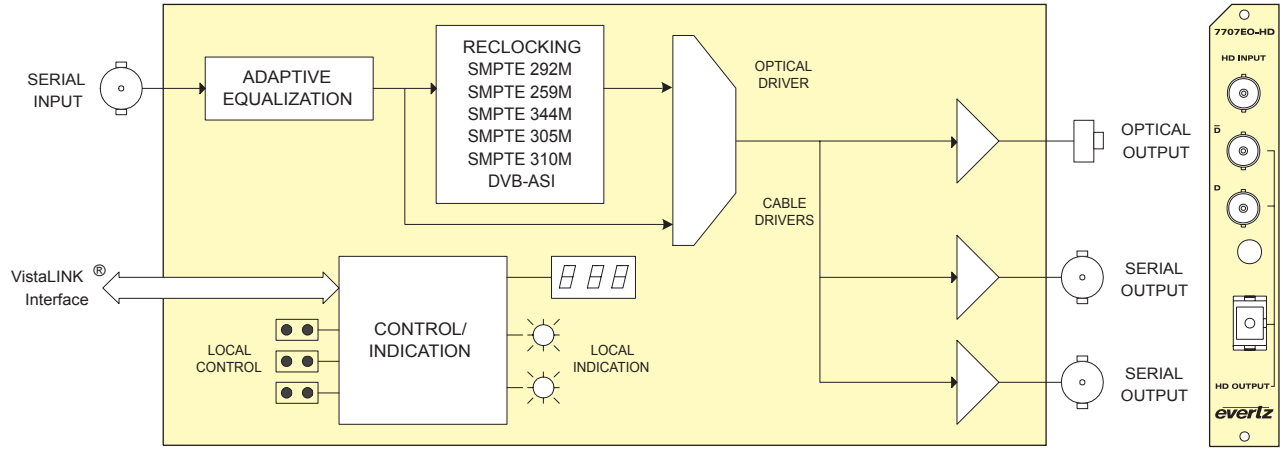

Specifications

Serial Video Input:

Standards:	
Reclocked:	SMPTE 292M, SMPTE 259M A, B, C, D, SMPTE 344M, SMPTE 305M, DVB-ASI, M2S, SMPTE 310M
Non-Reclocked:	Any bi-level signal type at rates of 19.4Mb/s to 1.485Gb/s
Connector:	1 BNC per IEC 60169-8 Amendment 2
Equalization:	Automatic to 150m @ 1.485Gb/s with Belden 1694A or equivalent cable
Return Loss:	> 15dB to 1.5GHz

Serial Video Outputs:

Number of Outputs:	2 Per Card (1 output DVB-ASI/M2S compliant)
Connector:	BNC per IEC 60169-8 Amendment 2
Signal Level:	800mV ±80mV
DC Offset:	0V ±0.5V
Rise and Fall Time:	< 270ps
Overshoot:	< 10% of amplitude
Return Loss:	> 12dB to 1.5GHz
Wide Band Jitter:	< 0.2 UI (Reclocked).

Optical Output:

Standard:	SMPTE 297M
Number of Outputs:	1
Connector:	Female SC/PC, ST/PC or FC/PC
Return Loss:	> 14dB
Rise and Fall Time:	< 270ps
Wide Band Jitter:	< 0.2 UI (Reclocked).
Wavelengths:	See Ordering Information
Output Power:	
1310nm FP:	-7dBm ±1dBm
1310/1550nm DFB:	0dBm ±1dBm
CWDM:	0dBm ±1dBm
DWDM:	7dBm ±1dBm

Electrical:

Voltage:	+12V DC
Power:	8W (Non DWDM), 11W (DWDM)
EMI/RFI:	Complies with FCC Part 15, Class A EU EMC Directive

Physical:

Number of slots:	1

Compliance:

Electrical Safety:	CSA Listed to UL 60065-03, IEC 60065 Complies with CE Low voltage Directive
Laser Safety:	Class 1 laser product Complies with 24 CFR 1040.10 and 1040.11 IEC 60825-1
EMI/RFI:	Complies with FCC Part 15, Class A EU EMC directive

Ordering Information

7707EO13-HD	HD Electrical to Optical Converter, 1310nm FP Laser
7707EO15-HD	HD Electrical to Optical Converter, 1550nm DFB Laser
For CWDM, please refer to the end of the fiber section for ordering information	
7707EOxx-HD	HD Electrical to Optical Converter, CWDM DFB Laser
For DWDM, please refer to the end of the fiber section for ordering information	
7707EODxxx-HD	HD Electrical to Optical Converter, DWDM Laser

Ordering Options Rear Plate and Fiber Connector must be specified at time of order
Eg: Model +SC +3RU

Rear Plate Suffix

+3RU	3RU Rear Plate for use with 7700FR-C Multiframe
+1RU	1RU Rear Plate for use with 7701FR Multiframe
+SA	Standalone Enclosure Rear Plate

Connector Suffix

+SC	SC/PC
+ST	ST/PC
+FC	FC/PC

Fiber Optic Patch Cable

CB-FP1M-SCPC	Single mode fiber cable, 1m, SC/PC male termination
CB-FP1M-STPC	Single mode fiber cable, 1m, ST/PC male termination
CB-FP5M-SCPC	Single mode fiber cable, 5m, SC/PC male termination
CB-FP5M-STPC	Single mode fiber cable, 5m, ST/PC male termination
CB-FP10M-SCPC	Single mode fiber cable, 10m, SC/PC male termination
CB-FP10M-STPC	Single mode fiber cable, 10m, ST/PC male termination

Enclosures

7700FR-C	3RU Multiframe which holds up to 15 single slot modules
7701FR	1RU Multiframe which holds up to 3 single or dual slot modules
S7701FR	Standalone enclosure

Features & Benefits

- Supports all SMPTE 292M standards at 1.485Gb/s
- Supports all SMPTE 259M standards with operation from 143Mb/s-360Mb/s
- Supports SMPTE 310M (19.4Mb/s), M2S or DVB-ASI (270Mb/s), SMPTE 344M (540Mb/s), and SMPTE 305M (SDTi) rates
- Auto rate selection, indication and reclocking for all SDI and HD-SDI data rates from 143Mb/s to 1.485Gb/s
- Selectable non-reclock mode for other rates
- Detection and display of optical input power, video format, and EDH errors (SDI only)
- Display of received optical power for continuous indication of link integrity
- Wide range optical input (1270nm-1610nm)
- Supports single-mode and multi-mode fiber optic cable
- Fully hot-swappable from front of frame
- Comprehensive signal and card status monitoring via four digit card edge display or remotely through SNMP and VistaLINK®
- VistaLINK® capability is available when modules are used with the 3RU 7700FR-C frame and a 7700FC VistaLINK® Frame Controller module in slot 1 of the frame
- Occupies one card slot and can be housed in either a 1RU frame which will hold up to three modules, a 3RU frame which will hold up to 15 modules, or a standalone enclosure which will hold one module

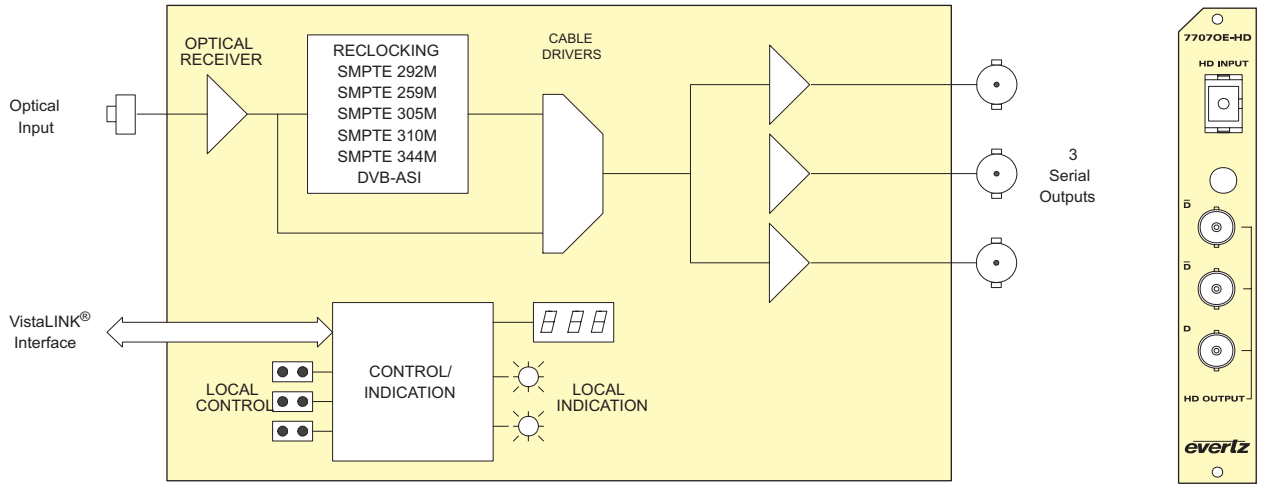

Specifications

Optical Input:

Standards:	SMPTE 297M
Reclocked:	SMPTE 292M, SMPTE 259M , A, B, C,D, SMPTE 310M (19.4Mb/s)SMPTE 305M, DVB-ASI, M2S
Non-Reclocked:	Any bi-level signal type at rates of 19.4Mb/s-1.485Gb/s
Connector:	Female SC/PC, ST/PC or FC/PC
Wavelength:	1270nm-1610nm
Optical Sensitivity:	
Standard:	-23dBm @ 1.485Gb/s
High Sensitivity (-H):	-28dBm @ 1.485Gb/s
Max. Input Power:	
Standard:	-1dBm
High Sensitivity (-H):	-8dBm

Serial Video Outputs:

Number of Outputs:	3 Per Card (1 output DVB-ASI/ M2S compliant)
Connectors:	BNC per IEC 60169-8 Amendment 2
Impedance:	75Ω (nominal)
Signal Level:	800mV(nominal)
DC Offset:	0V ±0.5V
Rise and Fall Time:	< 270ps
Overshoot:	< 10% of amplitude
Return Loss:	> 12dB to 1.5GHz
Wide Band Jitter:	< 0.20 UI (Reclocked)

Electrical:

Voltage:	+12V DC
Power:	8W
EMI/RFI:	Complies with FCC Part 15, Class A EU EMC Directive

Physical:

Number of slots:	1

Ordering Information

7707OE-HD	HDTV Optical to Electrical Converter, 19.4Mb/s to 1.5Gb/s
7707OE-HD-H	HDTV Optical to Electrical Converter, 19.4Mb/s to 1.5Gb/s, High Sensitivity receiver

Ordering Options Rear Plate and Fiber Connector must be specified at time of order
Eg. Model +3RU +SC

Rear Plate Suffix

+3RU	3RU Rear Plate for use with 7700FR-C Multiframe
+1RU	1RU Rear Plate for use with 7701FR Multiframe
+SA	Standalone Enclosure Rear Plate

Connector Suffix

+SC	SC/PC
+ST	ST/PC
+FC	FC/PC

Fiber Optic Patch Cable

CB-FP1M-SCPC	Single mode fiber cable, 1m, SC/PC male termination
CB-FP1M-STPC	Single mode fiber cable, 1m, ST/PC male termination
CB-FP5M-SCPC	Single mode fiber cable, 5m, SC/PC male termination
CB-FP5M-STPC	Single mode fiber cable, 5m, ST/PC male termination
CB-FP10M-SCPC	Single mode fiber cable, 10m, SC/PC male termination
CB-FP10M-STPC	Single mode fiber cable, 10m, ST/PC male termination

Enclosures

7700FR-C	3RU Multiframe, which holds up to 15 single slot modules
7701FR	1RU Multiframe, which holds up to 3 single or dual slot modules
S7701FR	Standalone enclosure

7707VT-4-HS

Quad SD / Dual HD Fiber Transmitter

Features & Benefits

- Single card TDM multiplexer for two HD-SDI signals, or one HD-SDI signal and three SDI/DVB-ASI signals, or four SDI/DVB-ASI signals
- Two auto-sensing video inputs for HD-SDI or SDI/DVB-ASI video signals
- Two 270Mb/s inputs for SDI or DVB-ASI video signals
- Signal transport over fiber uninterrupted by loss of any HD-SDI, SDI, SDTi or DVB-ASI input feed
- Transparently passes embedded AES or any other data in the horizontal or vertical ancillary data space
- Fully hot-swappable from front of frame
- Comprehensive signal and card status monitoring via four digit card edge display or remotely through SNMP and VistaLINK®
- VistaLINK® capability is available when modules are used with the 3RU 7700FR-C frame and a 7700FC VistaLINK® Frame Controller module in slot 1 of the frame
- Automatic coaxial input equalization up to 130m at 1.485Gb/s and 250m at 270Mb/s (Belden 1694A)
- Supports single-mode and multi-mode fiber optic cable
- Optical output wavelengths of 1310nm, 1550nm, and up to sixteen CWDM wavelengths (ITU-T G.694.2 compliant)
- DWDM wavelengths (ITU-T G.694.1 compliant) also available
- SC/PC, ST/PC, FC/PC connector options
- Occupies one card slot & can be housed in a standalone frame, a 1RU frame holding up to 3 modules or a 3RU frame holding up to 15 modules

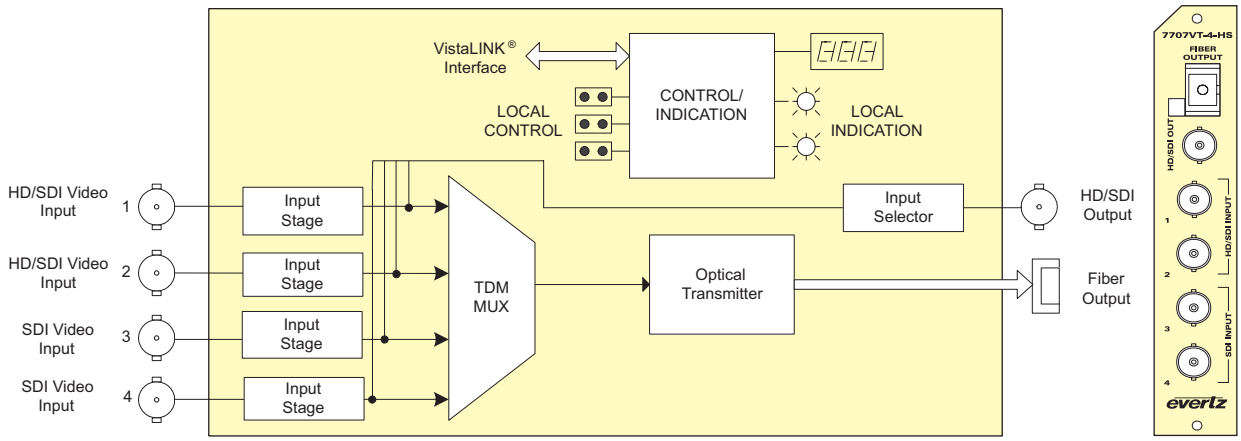

Specifications

Serial Video Input:

Number of Inputs:	2 HD/SDI/DVB-ASI and 2 SDI/DVB-ASI video signals
Standard:	
Inputs 1&2	SMPTE 292M, SMPTE 259M-C, DVB-ASI
Inputs 3&4	SMPTE 259M-C, DVB-ASI
Connector:	4 BNC per IEC 60169-8 Amendment 2
Equalization:	Automatic to 100m @ 1.485Gb/s and 250m @ 270Mb/s with Belden 1694A or equivalent cable
Return Loss:	> 15dB up to 1.5Gb/s

Serial Video Output:

Number of Outputs:	1, loopback signal user-selectable from above 4 inputs
Connector:	BNC per IEC 60169-8 Amendment 2
Standards:	SMPTE 292M, SMPTE 259-C, SMPTE 305.2M
Signal Level:	800mV nominal
DC Offset:	0V ±0.5V
Rise and Fall Time:	< 270ps at 1.485Gb/s and 900ps nominal at 270Mb/s
Overshoot:	< 10% of amplitude
Return Loss:	> 12dB to 1.5Gb/s
Wideband Jitter:	< 0.2 UI

Optical Output:

Number:	1
Connector:	Female SC/PC, ST/PC or FC/PC
Return Loss:	> 14dB
Rise and Fall Time:	200 ps nominal
Wideband Jitter:	< 0.2 UI
Fiber Size:	9µm core/125mm overall
Wavelengths:	
Standard:	1310nm, 1550nm (nominal)
CWDM:	1270nm to 1610nm (See Ordering Information)
DWDM:	C-Band (ITU-T G.694.1 compliant) (See Ordering Information)
Output Power:	
1310nm FP(Standard):	-7dBm ±1dBm
1550nm & CWDM DFB:	0dBm ±1dBm
DWDM DFB:	7dBm ±1dBm

Electrical:

Voltage:	+12V DC
Power:	10W (Non DWDM), 13W (DWDM)

Physical:

Number of slots:	1

Compliance:

Electrical Safety:	CSA Listed to CSA C22.2 No. 60065-03, UL 60065-03 IEC 60065-(2001-12) 7th Edition Complies with CE Low voltage directive 93/68/EEC
Laser Safety:	Complies with 24 CFR 1040.10 and 1040.11 except for deviations pursuant to LN No. 50, dated July 26, 2001 Complies with IEC 60825-1, Am. 2
EMI/RFI:	Complies with FCC regulations for class A devices Complies with EU EMC directive 89/336/EEC

Ordering Information

7707VT13-4-HS	Quad SD/Dual HD Fiber Transmitter, 1310nm FP, VistaLINK®
7707VT15-4-HS	Quad SD/Dual HD Fiber Transmitter, 1550nm DFB, VistaLINK®

For CWDM, please refer to the end of the fiber section for ordering information

7707VTxx-4-HS	Quad SD/Dual HD Fiber Transmitter, CWDM Laser, VistaLINK®

For DWDM, please refer to the end of the fiber section for ordering information

7707VTDxxx-4-HS	Quad SD/Dual HD Fiber Transmitter, DWDM Laser, VistaLINK®

Ordering Options	Rear Plate and Fiber Connector must be specified at time of order Eg: Model +SC +3RU
Rear Plate Suffix	
+3RU	3RU Rear Plate for use with 7700FR-C Multiframe
+1RU	1RU Rear Plate for use with 7701FR Multiframe
+SA	Standalone Enclosure Rear Plate
Connector Suffix	
+SC	SC/PC
+ST	ST/PC
+FC	FC/PC
Enclosures	
7700FR-C	3RU Multiframe which holds up to 15 single slot modules
7701FR	1RU Multiframe which holds up to 3 single or dual slot modules
S7701FR	Standalone enclosure

Features & Benefits

- Single card TDM de-multiplexer for two HD-SDI signals, or one HD-SDI signal and three SDI/DVB-ASI signals, or four SDI/DVB-ASI signals
- Low jitter outputs
- Independent signal outputs unaffected by loss of any other HD, SDI or DVB-ASI input feed
- Transparently passes embedded AES or any other data in the horizontal or vertical ancillary data space
- Fully hot-swappable from front of frame
- Supports single-mode and multi-mode fiber optic cable
- Accepts any wavelength in the 1270nm to 1610nm range
- SC/PC, ST/PC, FC/PC connector options
- Comprehensive signal and card status monitoring via four digit card edge display or remotely through SNMP and VistaLINK®
- VistaLINK® capability is available when modules are used with the 3RU 7700FR-C frame and a 7700FC VistaLINK® Frame Controller module in slot 1 of the frame
- Occupies one card slot & can be housed in a standalone frame, a 1RU frame holding up to 3 modules or a 3RU frame holding up to 15 modules

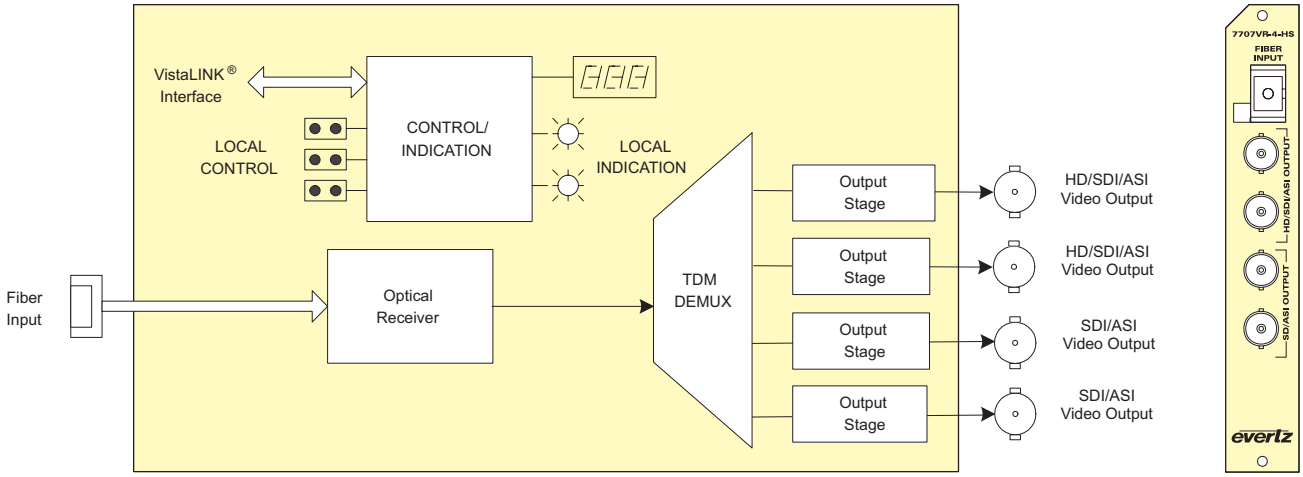

Specifications

Optical Input:
Number of Inputs: 1
Connector: Female SC/PC, ST/PC, FC/PC
Return Loss: > 25dB
Operating Wavelength:
1270nm to 1610nm
Maximum Input Power:
Standard Version: -1dBm
-H Version: -8dBm
Optical Sensitivity:
Standard Version: -20dBm
-H Version: -28dBm

Serial Video Outputs:
Number of Outputs: 2 HD/SDI/DVB-ASI and 2 SDI/DVB-ASI video signals
Standard:
Outputs 1&2: SMPTE 292M, SMPTE 259M-C, DVB-ASI
Outputs 3&4: SMPTE 259M-C, DVB-ASI
Connector: BNC per IEC 60169-8 Amendment 2
Signal Level: 800mV nominal
DC Offset: 0V ±0.5V
Rise and Fall Time:
1.485Gb/s: < 270ps
270Mb/s: 900ps nominal
Overshoot: < 10% of amplitude
Return Loss: > 12dB to 1.5Gb/s
Wide Band Jitter: < 0.2 UI

Electrical:
Voltage: +12V DC
Power: 10W

Physical:
Number of slots: 1

Ordering Information

7707VR-4-HS	Quad SD/Dual HD Demux Fiber Receiver, VistaLINK®
7707VR-4-HS-H	Quad SD/Dual HD Demux Fiber Receiver, High sensitivity RX, VistaLINK®

Ordering Options Rear Plate and Fiber Connector must be specified at time of order
Eg: Model +SC +3RU

Rear Plate Suffix

+3RU	3RU Rear Plate for use with 7700FR-C Multiframe
+1RU	1RU Rear Plate for use with 7701FR Multiframe
+SA	Standalone Enclosure Rear Plate

Connector Suffix

+SC	SC/PC
+ST	ST/PC
+FC	FC/PC

Enclosures

7700FR-C	3RU Multiframe which holds up to 15 single slot modules
7701FR	1RU Multiframe which holds up to 3 single or dual slot modules
S7701FR	Standalone enclosure

2405EO-HD

HDTV Miniature Optical Transmitter, 19.4Mb/s to 1.5Gb/s

Features & Benefits

- Operation from 19.4Mb/s to 1.5Gb/s
  - Reclocking for SMPTE 292M (1.485Gb/s)
  - Non-reclocking for all other rates from 19.4Mb/s to 1.5Gb/s including SMPTE 259M, SMPTE 305M, SMPTE 310M, M2S and DVB-ASI
- Available in 1310nm, 1550nm, and up to sixteen different CWDM wavelengths (ITU-T G.694.2 compliant)
- Automatic laser shutdown on absence of input signal for extended laser life
- Supports single-mode and multi-mode fiber optic cable
- Immunity to video Pathological signals
- Rugged, small form factor enclosure
- Low Power, +12V DC operation

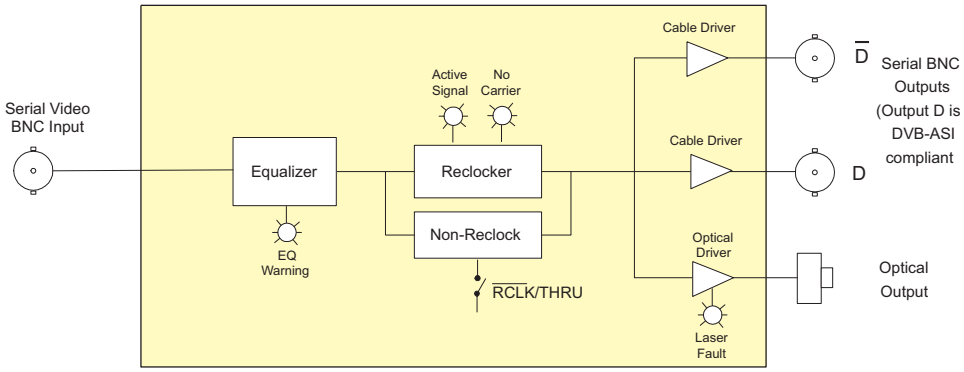

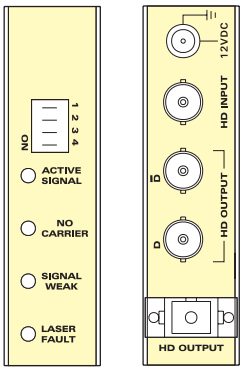

*Note: Non-reclock Mode will operate 19.4Mb/s to 1.5Gb/s

Specifications

Standards
SMPTE 292M, 259M, 297M, 310M, M2S, DVB-ASI, and any bi-level Telecom/Datacom signal from 19.4Mb/s to 1.5Gb/s

Serial Video BNC Input

Number of Inputs:	1
Connector:	BNC per IEC 60169-8 Amendment 2
Equalization:	Automatic to 125m @ 1.485Gb/s with Belden 1694A (or equivalent)
Return Loss:	> 15dB up to 1.485GHz

Serial Video BNC Output

Number of Outputs:	2 (1 output DVB-ASI/M2S compliant)
Connector:	BNC per IEC 60169-8 Amendment 2
Signal Level:	800mV nominal
DC Offset:	0V ±0.5V
Rise, Fall Time:	270ps nominal
Overshoot:	< 10% of amplitude
Return Loss:	> 15dB up to 1.485GHz
Wideband Jitter:	< 0.2 UI

Optical Output

Number of Outputs:	1
Connector:	SC/PC, ST/PC, FC/PC Female Housing
Return Loss:	> 14dB
Rise, Fall Time:	200ps nominal
Jitter:	< 0.2 UI reclocked
Nominal Wavelength:	
Standard:	1310nm, 1550nm
CWDM:	1270nm-1610nm (See Ordering Info)

Optical Power

1310nm FP:	-7dBm ±1dBm
1310nm/1550nm DFB:	0 dBm ±1dBm
CWDM DFB:	0 dBm ±1dBm

Physical

Dimensions:	With Flanges: 6"L x 4"W x 1"H (152mm L x 114mm W x 25mm H)
Weight:	0.5lbs (0.28kg)

Electrical

Voltage:	+12V DC
Power:	6W
Safety:	Complies with EU Safety Directive
EMI/RFI:	Complies with FCC Part 15, Class A EU EMC Directive

Ordering Information

2405EO3F-HD	HD Miniature Optical Transmitter 1310nm, FP Laser
2405EO3D-HD	HD Miniature Optical Transmitter 1310nm, DFB Laser
2405EO5D-HD	HD Miniature Optical Transmitter 1550nm, DFB Laser

For CWDM, please refer to the end of the fiber section for ordering information

2405EOxx-HD	HD Miniature Optical Transmitter CWDM DFB Laser

All 2405 modules include power supply

Ordering Options
Fiber Connector must be specified at time of order
Eg: Model +SC

Connector Suffix

+SC	SC/PC
+ST	ST/PC
+FC	FC/PC

Fiber Optic Patch Cable

CB-FP1M-SCPC	Single mode fiber cable, 1m, SC/PC male termination
CB-FP1M-STPC	Single mode fiber cable, 1m, ST/PC male termination
CB-FP5M-SCPC	Single mode fiber cable, 5m, SC/PC male termination
CB-FP5M-STPC	Single mode fiber cable, 5m, ST/PC male termination
CB-FP10M-SCPC	Single mode fiber cable, 10m, SC/PC male termination
CB-FP10M-STPC	Single mode fiber cable, 10m, ST/PC male termination

Features & Benefits

- Operation from 19.4Mb/s to 1.5Gb/s
  - Reclocking for SMPTE 292M (1.48Gb/s)
  - Non-reclocking for all other rates from 19.4Mb/s to 1.5Gb/s including SMPTE 259M, SMPTE 305M, SMPTE 310M, M2S and DVB-ASI
- Immunity to video Pathological signals
- Supports single-mode and multi-mode fiber optic cable
- Rugged, small form factor enclosure
- Low Power, +12V DC operation

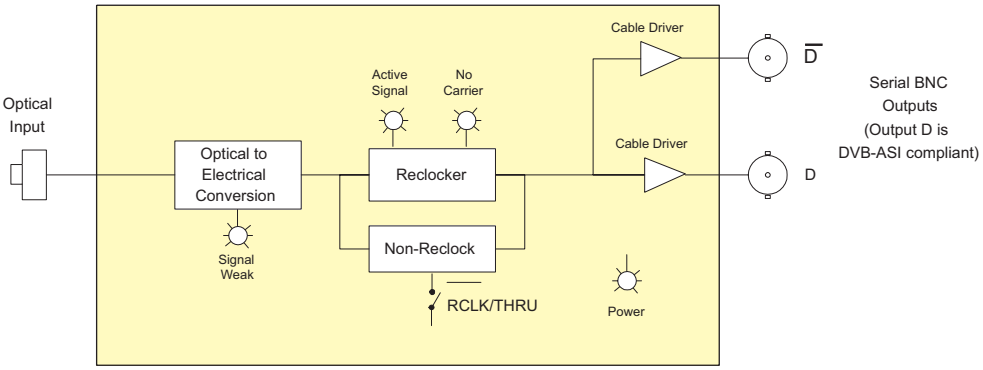

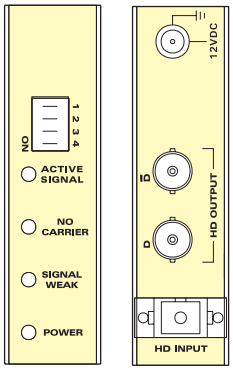

*Note: Non-reclock Mode will operate 19.4Mb/s to 1.5Gb/s

Specifications

Standards
SMPTE 292M, 259M, 297M, 310M, M2S, DVB-ASI, and any bi-level Telecom/Datacom signal from 19.4Mb/s to 1.5Gb/s

Optical Input

Number of Inputs:	1
Operating Wavelength:	1270nm to 1610nm
Max. Input Power:	-1dBm
Optical Sensitivity:	-23dBm
Connector:	SC/PC, ST/PC, FC/PC Female Housing

Serial Video BNC Outputs

Number of Outputs:	2 (1 output DVB-ASI/M2S compliant)
Connector:	BNC per IEC 60169-8 Amendment 2
Signal Level:	800mV nominal
DC Offset:	0V ±0.5V
Rise, Fall Time:	270ps nominal
Overshoot:	< 10% of amplitude
Return Loss:	> 15dB up to 1.485GHz
Wideband Jitter:	< 0.2 UI

Physical

Dimensions:	With Flanges: 6"L x 4"W x 1"H (152mm L x 114mm W x 25mm H)
Weight:	0.5lbs (0.28kg)

Electrical

Voltage:	+12V DC
Power:	6W
Safety:	Complies with EU Safety Directive
EMI/RFI:	Complies with FCC Part 15, Class A EU EMC Directive

Ordering Information

2405OE-HD	HD Miniature Optical Receiver, 19.4Mb/s to 1.5Gb/s
Ordering Options	Fiber Connector must be specified at time of order Eg: Model +SC

Connector Suffix

+SC	SC/PC
+ST	ST/PC
+FC	FC/PC

Fiber Optic Patch Cable

CB-FP1M-SCPC	Single mode fiber cable, 1m, SC/PC male termination
CB-FP1M-STPC	Single mode fiber cable, 1m, ST/PC male termination
CB-FP5M-SCPC	Single mode fiber cable, 5m, SC/PC male termination
CB-FP5M-STPC	Single mode fiber cable, 5m, ST/PC male termination
CB-FP10M-SCPC	Single mode fiber cable, 10m, SC/PC male termination
CB-FP10M-STPC	Single mode fiber cable, 10m, ST/PC male termination

7707ADVT-HD

Analog, SDI or HD-SDI Video with 4-Channel Analog or AES Audio Fiber Transmitter

Features & Benefits

- Single card fiber optic transmitter for one composite Analog, SDI or HD-SDI video and four analog or AES audio signals
- Auto-sensing (analog or digital) video and audio inputs
- Supports 525/625 line component 4:2:2 SDI @ 270Mb/s
- Supports HD (SMPTE 292M) video @ 1.485Gb/s
- Supports both NTSC and PAL analog video
- Supports Analog to Digital and Digital to Analog audio conversion
- Broadcast quality analog video and audio performance
- Meets or exceeds EIA/TIA RS250-C short haul specifications for analog video and audio transport
- Supports 32, 44.1, 48kHz AES audio inputs
- Dolby E compatible
- Comprehensive signal and card status monitoring via four digit card edge display or remotely through SNMP and VistaLINK®
- VistaLINK® capability is available when modules are used with the 3RU and a 7700FC VistaLINK® Frame Controller module in slot 1 of the frame
- Adjustable gain equalization for analog video for up to 250m of Belden 1694A coaxial cable
- Fully hot-swappable from front of frame with no fiber disconnect/reconnect required
- Supports single-mode and multi-mode fiber optic cable
- Optical output wavelengths at 1310nm, 1550nm and up to sixteen CWDM wavelengths (ITU G 694.2 compliant)
- DWDM wavelengths also available (ITU G.694.1 compliant)

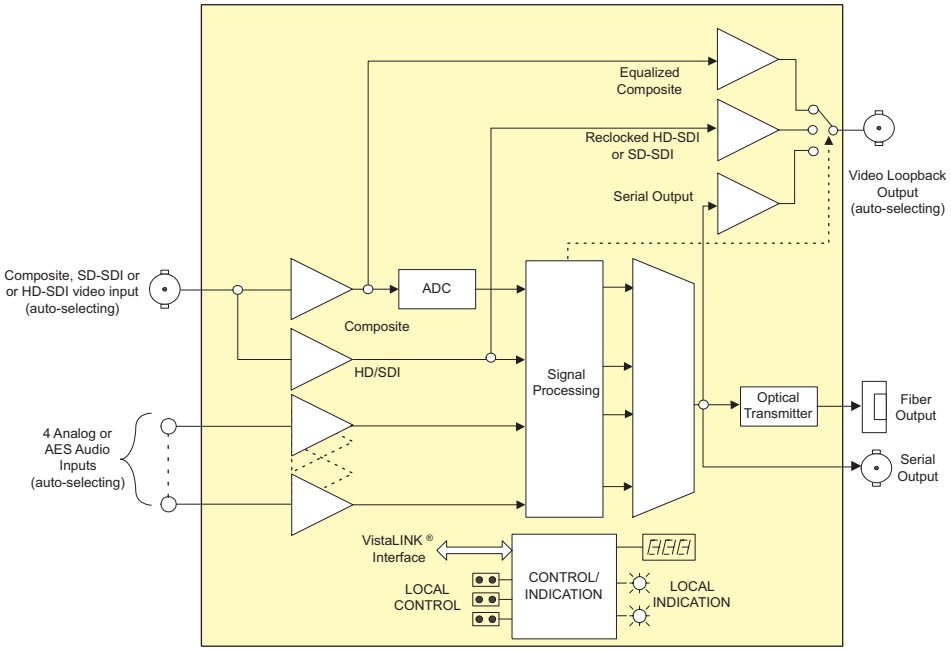

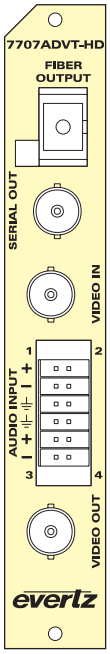

Specifications

Analog Video Input:

Standards:	SMPTE 170M (NTSC), ITU-R 624-2 (PAL)
Number of Inputs:	1
Connector:	BNC per IEC 60169-8 Amendment 2
Signal Quantization:	12 bit
System Bandwidth:	> 5.5MHz
Input Level:	2V p-p (Maximum)
Gain Equalization:	Up to 250m of Belden 1694A or equivalent (adjustable)
Input impedance:	75Ω
Return Loss:	> 30dB to 5.5MHz
Signal/Noise Ratio:	> 70dB
Differential Gain:	< 1.0%
Differential Phase:	< 0.7°
Passband Ripple:	
NTSC:	< ±0.1dB to 4.1MHz, < ±0.2dB to 5.5MHz
PAL:	< ±0.1dB to 4.8MHz, < ±0.2dB to 5.8MHz
Chroma/Luma Gain:	98% to 103%
Chroma/Luma Delay:	
NTSC:	< 5ns
PAL:	< 12ns
Line Time Distortion:	1.2%

Serial Video Input:

Standard:	SMPTE 259M-C (525 or 625 line component), SMPTE 305M (SDTi), DVB-ASI (without separate audio), SMPTE 292M (HD)
Connector:	BNC per IEC 60169-8 Amendment 2
Equalization:	Automatic to 300m @ 270 Mb/s and 100m @1.485 Gb/s with Belden 1694A or equivalent cable
Return Loss:	> 15dB up to 1.485Gb/s

Analog Video Output:

Standard:	Same as Analog Video Input
Number of Outputs:	1
Connector:	BNC per IEC 60169-8 Amendment 2
Output Level:	1V p-p
Output Impedance:	75Ω
Return Loss:	> 30dB to 5.5MHz

Serial Video Output:

Number of Outputs:	2, (1 loopback, 1 serial)
Connector:	BNC per IEC 60169-8 Amendment 2
Signal Level:	800mV nominal
DC Offset:	0V ±0.5V
Rise and Fall Time:	900ps nominal @ 270 Mb/s < 270ps @ 1.485Gb/s
Overshoot:	< 10% of amplitude
Return Loss:	> 15dB at 270Mb/s
Wide Band Jitter:	< 0.2 UI

Analog Audio Inputs:

Number of Inputs:	4
Type:	Balanced analog audio
Connector:	12-pin removable terminal block
Input impedance:	High Impedance (> 20kΩ)
Freq. Response:	±0.1dB, 20Hz to 20kHz
THD 20Hz-20kHz:	< 0.005%
Channel Phase Diff.:	±1°
SNR (weighted):	> 85dB
Max. Audio Input Level:	+24dBu
Signal Quantization:	24 Bits

AES Audio Inputs:

Number of Inputs:	4 (auto-sensing for balanced or unbalanced input)
Standard:	
Unbalanced AES:	SMPTE 276M
Balanced AES:	AES3-1992
Other:	Dolby E compatible
Connector:	12-pin removable terminal block
Input Return Loss:	> 15dB (1MHz to 6MHz)
Signal Level:	
Unbalanced:	1.2V p-p ±0.1V
Balanced:	1 to 7 Vp-p
Equalization:	
Unbalanced:	450m of Belden 1800D cable
Balanced:	1500m of Belden 1694A cable
Resolution:	Up to 24 bits
Sampling Rate:	32, 44.1, 48kHz
Impedance:	
Unbalanced:	75Ω
Balanced:	110Ω

Optical Outputs:

Number of Outputs:	1
Connector:	Female SC/PC, ST/PC or FC/PC
Return Loss:	> 14dB
Rise and Fall Time:	200ps nominal
Fiber Size:	9mm core/125mm overall
Wavelengths:	
Standard	1310nm, 1550nm (nominal)
CWDM:	See Ordering Information
DWDM:	See Ordering Information
Output Power:	
1310nm FP (Standard):	-7dBm ±1dBm
1550 & CWDM DFB:	0dBm ±1dBm
DWDM DFB	+7dBm ±1dBm

Electrical:

Voltage:	+12V DC
Power:	10W (Non DWDM), 12W (DWDM)

Physical:

Number of slots:	1

Compliance:

Electrical Safety:	CSA Listed to UL 60065-03, IEC 60065 Complies with CE Low voltage Directive
Laser Safety:	Class 1 laser product Complies with 24 CFR 1040.10 and 1040.11 IEC 60825-1
EMI/RFI:	Complies with FCC Part 15, Class A EU EMC directive

Ordering Information

7707ADVT13-HD:	Analog, or SDI or HD Video with 4/Channel Analog or AES Audio Fiber Transmitter
7707ADVT15-HD:	Analog, or SDI or HD Video with 4/Channel Analog or AES Audio Fiber Transmitter

For CWDM applications please refer to the end of the fiber section for details

7707ADVTxx-HD	Analog, HD-SDI or SDI Video & 4 Analog or 4 AES audio Fiber Transmitter, CWDM Laser, VistaLINK®

For DWDM applications please refer to the end of the fiber section for details

7707ADVTDxxx-HD	Analog, HD-SDI or SDI Video & 4 Analog or 4 AES audio Fiber Transmitter, DWDM Laser, VistaLINK®

Ordering Options	Rear Plate and Fiber Connector must be specified at time of order Eg: Model +SC +3RU
Rear Plate Suffix	
+3RU	3RU Rear Plate for use with 7700FR-C Multiframe
+1RU	1RU Rear Plate for use with 7701FR Multiframe
+SA	Standalone Enclosure Rear Plate
Connector Suffix	
+SC	SC/PC
+ST	ST/PC
+FC	FC/PC
Enclosures	
7700FR-C	3RU Multiframe which holds up to 15 single slot modules
7701FR	1RU Multiframe which holds up to 3 single or dual slot modules
S7701FR	Standalone Enclosure

7707ADVR-HD

Analog, SDI or HD-SDI Video with 4/Channel Analog or AES Audio Fiber Receiver

Features & Benefits

- Single card fiber optic receiver for one composite Analog, SDI or HD-SDI video and four analog or AES audio signals
- Auto sensing (analog or digital) video and audio outputs
- Supports 525/625 line component 4:2:2 SDI @ 270Mb/s
- Supports HD (SMPTE 292M) video @ 1.485Gb/s
- Supports both NTSC and PAL analog or 4:2:2 component digital video
- Supports Analog to Digital and Digital to Analog audio conversion
- Broadcast quality analog video and audio performance
- Meets or exceeds EIA/TIA RS250-C short haul specifications for analog video and audio transport
- Supports 32, 44.1, 48kHz AES audio
- Dolby E compatible
- Comprehensive signal and card status monitoring via four digit card edge display or remotely through SNMP and VistaLINK®
- VistaLINK® capability is available when modules are used with the 3RU 7700FR-C frame and a 7700FC VistaLINK® Frame Controller module in slot 1 of the frame
- Adjustable gain, DC offset and pre-emphasis for analog video for driving up to 250m of Belden 1694A coaxial cable
- Fully hot-swappable from front of frame with no fiber disconnect/reconnect required
- Supports single-mode and multi-mode fiber optic cable
- Wideband optical input (1270nm-1610nm)

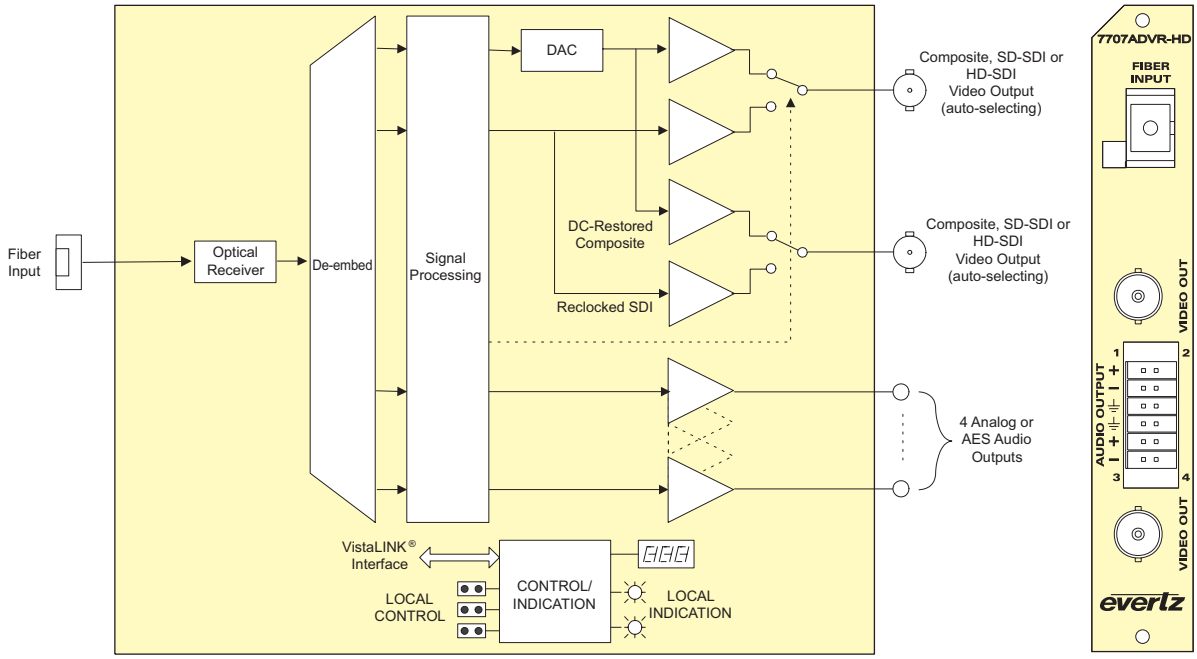

Specifications

Analog Video Outputs:

Standard:	SMPTE 170M, (NTSC), ITU-R 624-2 (PAL)
Number of Outputs:	2 BNC per IEC 60169-8 Amendment 2
System bandwidth:	> 5.5MHz
Output Level:	1V p-p (nominal), 2V p-p (maximum)
Gain:	Unity gain nominal, adjustable 50% to 150%
Output Impedance:	75Ω
Return Loss:	> 30dB to 5.5MHz
SNR:	> 70dB
Differential Gain:	< 1.0%
Differential Phase:	< 0.7°
Pre-Emphasis:	Adjustable cable loss compensation for up to 250m of Belden 1694A
Passband Ripple:	
NTSC:	< ±0.1dB to 4.1MHz and < ±0.2dB to 5.5MHz
PAL:	< ±0.1dB to 4.8MHz and < ±0.2dB to 5.8MHz
Chroma/Luma Gain:	98%-103%
Chroma/Luma Delay:	
NTSC:	< 5ns
PAL:	< 12ns
Line Time Distortion:	1.2%

Serial Video Output:

Number of Outputs:	2 regenerated
Standard:	SMPTE 259M-C (525 or 625 line component), SMPTE 305M (SDTi), DVB-ASI (without separate audio), SMPTE 292M (HD)
Connector:	BNC per IEC 60169-8 Amendment 2
Signal Level:	800mV nominal
DC Offset:	0V ±0.5V
Rise and Fall Time:	900ps nominal @ 270Mb/s < 270ps @1.485Gb/s
Overshoot:	< 10% of amplitude
Return Loss:	> 15dB up to 1.485Gb/s
Wide Band Jitter:	< 0.2 UI

Analog Audio Outputs:

Number of Outputs:	4
Type:	Balanced analog audio
Connector:	12-pin removable terminal block
Output impedance:	66Ω
Freq. Response:	±0.1dB, 20Hz to 20kHz
THD 20Hz-20kHz:	< 0.005%
Channel Phase Diff.	±1°
SNR (weighted):	> 85dB
Output Level Adj:	-20dB to +3dB
Max Output Level:	+24dBu into 10kΩ loads

AES Audio Outputs:

Number of Outputs:	4 regenerated (selectable for balanced or unbalanced)
Standard:	
Unbalanced AES:	SMPTE 276M
Balanced AES:	AES3-1992
Other:	Dolby E compatible
Connector:	12-pin removable terminal block
Input Return Loss:	> 15dB (1MHz to 6MHz)
Signal Level:	
Unbalanced:	1V p-p ±0.1V p-p
Balanced:	2V p-p ±0.1V p-p
Resolution:	Up to 24-bits
Sampling Rate:	32, 44.1, 48kHz
Output Jitter:	< 0.1 UI
Impedance:	
Unbalanced:	75Ω
Balanced:	110Ω

Optical Input:

Number of Inputs:	1
Connector:	Female SC/PC, ST/PC, FC/PC
Operating Wavelength:	1270nm to 1610nm
Max. Input Power:	0dBm
Optical Sensitivity:	-25dBm
High Standard Sensitivity:	-30dBm

Electrical:

Voltage:	+12V DC
Power:	12W

Physical:

Number of slots:	1

Ordering Information

7707ADVR-HD	Analog, SDI or HD-SDI Video & Analog/AES Audio Fiber Optic Receiver
Ordering Options	Fiber Connector must be specified at time of order Eg: Model +SC

Connector Suffix

+SC	SC/PC
+ST	ST/PC
+FC	FC/PC

Fiber Optic Patch Cable

CB-FP1M-SCPC	Single mode fiber cable, 1m, SC/PC male termination
CB-FP1M-STPC	Single mode fiber cable, 1m, ST/PC male termination
CB-FP5M-SCPC	Single mode fiber cable, 5m, SC/PC male termination
CB-FP5M-STPC	Single mode fiber cable, 5m, ST/PC male termination
CB-FP10M-SCPC	Single mode fiber cable, 10m, SC/PC male termination
CB-FP10M-STPC	Single mode fiber cable, 10m, ST/PC male termination

7707VAR-HD

HDTV with 4 AES Audio Fiber Receiver

The 7707VAR-HD is a VistaLINK® capable fiber optic receiver for HDTV or SDTV video and AES audio signals. This single card module outputs one HD-SDI or SD-SDI video plus four AES audio signals that have been transmitted by the companion 7707VAT-HD fiber optic transmitter.

The 7707VAR-HD occupies one card slot and can be housed in a 1RU frame that will hold up to 3 modules, a 3RU frame that will hold up to 15 modules or a standalone enclosure holding 1 module.

Features & Benefits

- Supports HDTV video formats @ 1.485Gb/s
- Supports 525/625 line component 4:2:2 SDI @ 270Mb/s
- Provides up to four de-embedded AES audio outputs
- Dolby E compatible
- Local display of optical signal strength, video and audio presence, video and AES formats
- Fully hot-swappable from front of frame
- Comprehensive signal and card status monitoring via four digit card edge display or remotely through SNMP and VistaLINK®
- VistaLINK® capability is available when modules are used with the 3RU 7700FR-C frame and a 7700FC VistaLINK® Frame Controller module in slot 1 of the frame
- Supports single-mode and multi-mode fiber optic cable
- Accepts any wavelength in the 1270nm to 1610nm range

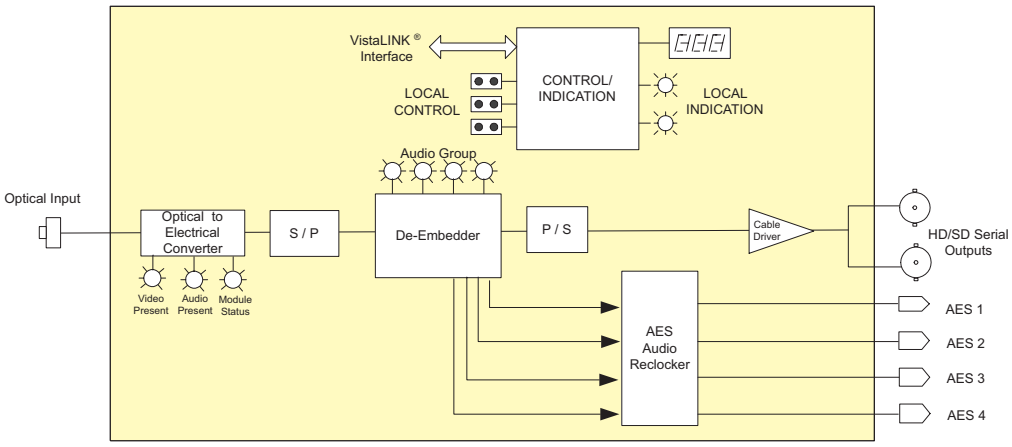

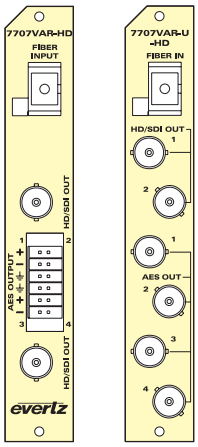

Specifications

Optical Input:
Number of Inputs: 1
Connector: Female SC/PC, ST/PC, FC/PC
Return Loss: > 25dB
Operating Wavelength: 1270nm to 1610nm
Maximum Input Power:
Standard: -1dBm
High Sensitivity -H version: -7dBm
Optical Sensitivity:
Standard: -23dBm
High Sensitivity -H version: -28dBm

Serial Video Outputs:
Number of Outputs: 2 regenerated
Standard: SMPTE 292M, SMPTE 259M-C, SMPTE 305M (SDTi), DVB-ASI (without separate audio)
Connector: BNC per IEC 60169-8 Amendment 2
Signal Level: 800mV nominal
DC Offset: 0V ±0.5V
Rise and Fall Time: < 270ps for HDSDI, < 900ps for SDI
Overshoot: < 10% of amplitude
Return Loss: > 15dB up to 1.485Gb/s
Wide Band Jitter: < 0.2 UI

AES Audio Outputs:
Number of Signals: 4 (user-selectable for balanced or unbalanced)
Standards: AES3-2003 (Balanced AES)
SMPTE 276M (Unbalanced AES)
Connector:
7707VAR-HD 12-pin removable terminal strip
7707VAR-U-HD BNC per IEC 60169-8 Amendment 2
Sampling Rate: 48kHz
Resolution: Up to 24 bits
Signal Level:
Balanced: 1V p-p ±0.1V
Unbalanced: 2V p-p ±0.1V Differential
Rise/Fall Times:
Balanced: 20ns ±5ns
Unbalanced: 35ns ±5ns
Impedance:
Balanced: 110Ω
Unbalanced: 75Ω
Return Loss: > 15dB, from 1MHz to 6MHz
Wideband Jitter: < 10ns p-p, with conditions of minimum to maximum cable length

System Performance (7707VAT-HD + 7707VAR-HD):
Video Input To Output Delay: < 35µs
Audio to Video delay: < 3.3ms with SRC enabled
+4ms with audio pop minimization enabled

Electrical:
Voltage: +12V DC
Power: 11W

Physical:
Number of slots: 1

Ordering Information

7707VAR-HD	HDTV with 4 AES Audio Fiber Receiver, VistaLINK® Monitoring
7707VAR-HD-H	HDTV with 4 AES Audio High Sensitivity Fiber Receiver, VistaLINK® Monitoring

Ordering Options Rear Plate and Fiber Connector must be specified at time of order
Eg: Model +SC +3RU

+U Unbalanced AES audio

Rear Plate Suffix
+3RU 3RU Rear Plate for use with 7700FR-C Multiframe
+1RU 1RU Rear Plate for use with 7701FR Multiframe
+SA Standalone Enclosure Rear Plate

Connector Suffix
+SC SC/PC
+SCF SC/PC connector with flap cover
+ST ST/PC
+FC FC/PC

Fiber Optic Patch Cable
CB-FP1M-SCPC Single mode fiber cable, 1m, SC/PC male termination
CB-FP1M-STPC Single mode fiber cable, 1m, ST/PC male termination
CB-FP5M-SCPC Single mode fiber cable, 5m, SC/PC male termination
CB-FP5M-STPC Single mode fiber cable, 5m, ST/PC male termination
CB-FP10M-SCPC Single mode fiber cable, 10m, SC/PC male termination
CB-FP10M-STPC Single mode fiber cable, 10m, ST/PC male termination

Enclosures
7700FR-C 3RU Multiframe which holds up to 15 single slot modules
7701FR 1RU Multiframe which holds up to 3 single or dual slot modules
S7701FR Standalone enclosure

7707VAT-HD

HD SDI with 4 AES Audio Fiber Transmitter

The 7707VAT-HD is a VistaLINK® - capable fiber optic transmitter for HDTV or SDTV video and AES audio signals. This single card module accepts one HD-SDI or SD-SDI video plus four AES audio and transmits them on a single fiber. The companion 7707VAR-HD receiver converts the HD-SDI and AES back to separate video and audio.

The fiber output is available in an assortment of optical wavelengths accomodating 1310/1550nm, CWDM and DWDM transmission schemes. The 7707VAT-HD occupies one card slot and can be housed in a 1RU frame that will hold up to 3 modules, a 3RU frame that will hold up to 15 modules or a standalone enclosure holding 1 module.

Features & Benefits

- Supports HDTV video formats @ 1.485Gb/s
- Supports 525/625 line component 4:2:2 SDI @ 270Mb/s
- Supports 32, 44.1, 48 kHz AES audio inputs
- Dolby E compatible
- AES audio inputs can be synchronous or asynchronous to each other and/or to input video
- Reclocked video output for additional signal distribution or monitoring
- Signal transport over fiber uninterrupted by loss of video or AES audio input feeds
- Comprehensive signal and card status monitoring via four digit card edge display or remotely through SNMP and VistaLINK®
- Local display of input coaxial cable length equalization
- VistaLINK® capability is available when modules are used with the 3RU 7700FR-C frame and a 7700FC VistaLINK® Frame Controller module in slot 1 of the frame
- Automatic coaxial input equalization up to 130m at 1.485Gb/s and 300m at 270Mb/s (Belden 1694A)
- Fully Hot-swappable from front of frame
- Supports single-mode and multi-mode fiber optic cable
- Optical output wavelengths of 1310nm, 1550nm, and up to sixteen CWDM wavelengths (ITU-T G.694.2 compliant)
- DWDM wavelengths (ITU-T G.694.1 compliant) also available

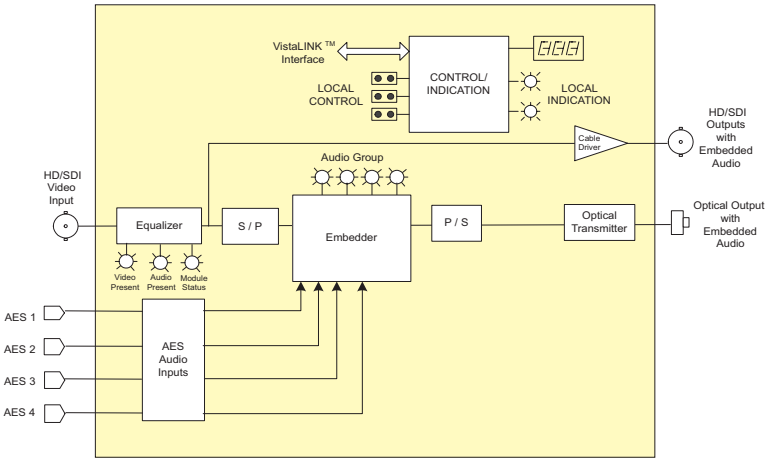

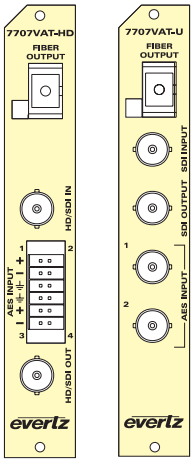

Specifications

Serial Video Input:

Standard:	SMPTE 292M, SMPTE 259M-C, SMPTE 305M (SDTi), DVB-ASI (without separate audio)
Connector:	1 BNC per IEC 60169-8 Amendment 2
Equalization:	Automatic to 100m @ 1.485 Gb/s and 300m @ 270 Mb/s with Belden 1694A (or equivalent)
Return Loss:	> 15 dB up to 1.485Gb/s

Serial Video Output:

Number of Outputs:	1 Per Card reclocked
Connector:	BNC per IEC 60169-8 Amendment 2
Signal Level:	800mV nominal
DC Offset:	0V ± 0.5V
Rise and Fall Time:	< 270ps for HDI, < 900ps for SD
Overshoot:	< 10% of amplitude
Return Loss:	> 15dB up to 1.485Gb/s
Wide Band Jitter:	< 0.2 UI

AES Audio Inputs:

Number of Signals:	4 Inputs
Standards:	AES3-2003 (Balanced AES) SMPTE 276M (Unbalanced AES)
Connector:	
7707VAT-HD:	12-pin removable terminal strip
7707VAT-U-HD:	BNC per IEC 60169-8 Amendment 2
Sampling Rate:	32kHz, 44.1kHz, 48kHz
Resolution:	Up to 24 bits
Minimum Input:	200mV p-p
Maximum Input:	Balanced 7V p-p, Unbalanced 1.2V p-p
Equalization:	
Balanced:	<600m @ 48kHz, with Belden 1800B, and 2V p-p source signal
Unbalanced:	<1200m @ 48kHz, with Belden 8281, and 1V p-p source signal
Impedance:	Balanced 110Ω, Unbalanced 75Ω
Return Loss:	> 15dB, from 1MHz to 6MHz
Alignment Jitter:	< 10ns p-p, with conditions of minimum to maximum cable length

Optical Output:

Number:	1
Connector:	Female SC/PC, ST/PC or FC/PC
Return Loss:	> 14dB
Wavelengths:	See Ordering Information
Output Power:	
1310nm FP(Standard):	-7dBm ±1dBm
1550nm & CWDM DFB:	0dBm ±1dBm
DWDM DFB:	7dBm ±1dBm
Fiber Size:	9µm core/125 mm overall

System Performance (7707VAT-HD + 7707VAR-HD):

Video Input To Output Delay:	< 35ms
Audio to Video delay:	< 1.2ms @32kHz/< 1ms @48kHz +3.3ms with SRC enabled +4ms with audio pop minimization enabled

Electrical:

Voltage:	+12V DC
Power:	11W (Non-DWDM), 13W (DWDM)

Compliance:

Electrical Safety:	CSA Listed to UL 60065-03, IEC 60065 Complies with CE Low voltage Directive
Laser Safety:	Class 1 laser product Complies with 24 CFR 1040.10 and 1040.11, IEC 60825-1
EMI/RFI:	Complies with FCC Part 15, Class A EU EMC directive

Ordering Information

7707VAT-13-HD	HD-SDI with 4 AES Audio Fiber Transmitter, 1310nm FP laser, VistaLINK®
7707VAT-15-HD	HD-SDI with 4 AES Audio FiberTransmitter, 1550nm DFB laser, VistaLINK®
For CWDM applications please refer to the end of the fiber section for details	
7707VAT-xx-HD	HD-SDI with 4 AES Audio Fiber Transmitter, CWDM Laser
For DWDM application please refer to end of fiber section for details	
7707VATDxxx-HD	HD-SDI with 4 AES Audio Fiber Transmitter, DWDM Laser
Ordering Options	Rear Plate and Fiber Connector must be specified at time of order Eg: Model +SC +3RU
+U	Unbalanced AES audio

Rear Plate Suffix

+3RU	3RU Rear Plate for use with 7700FR-C Multiframe
+1RU	1RU Rear Plate for use with 7701FR Multiframe
+SA	Standalone Enclosure Rear Plate

Connector Suffix

+SC	SC/PC
+SCF	SC/PC connector with flap cover
+ST	ST/PC
+FC	FC/PC

Enclosures

7700FR-C	3RU Multiframe which holds up to 15 single slot modules
7701FR	1RU Multiframe which holds up to 3 single or dual slot modules
S7701FR	Standalone enclosure

7707MRA-HD-F2, 7707MRA-HD-W

HD-SDI 4 AES Audio Bi-directional RS232/422, 2 GPI/GPO Fiber Receiver

Features & Benefits

- Supports HD-SDI and SDI video
- Demultiplexes up to 4 AES audio, bi-directional RS-232/422 and 2 GPIO with HD-SDI or SDI
- Supports all SMPTE 292M (1.485Gb/s) rates/standards
- Supports 525/625 line component 4:2:2 SDI @ 270Mb/s
- Supports 32, 44.1, 48kHz AES audio
- Dolby E compatible
- Built-in jitter attenuation
- Comprehensive signal and card status monitoring via four digit card edge display or remotely through SNMP and VistaLINK®
- VistaLINK® capability is available when modules are used with the 3RU 7700FR-C frame and a 7700FC VistaLINK® Frame Controller module in slot 1 of the frame
- Local display of optical signal strength, video, audio and data presence, video and AES formats, GPI and GPO status
- Accepts any wavelength in the 1270nm to 1610nm range
- Optical output wavelengths of 1310nm, 1550nm, and up to sixteen CWDM wavelengths (ITU-T G.694.2 compliant)
- DWDM wavelengths (ITU-T G.694.1 compliant) also available
- Supports single-mode and multi mode fiber optic cable
- Fully hot-swappable from front of frame
- Occupies a single or dual card slot and can be housed in a 1RU frame that will hold up to 3 modules, a 3RU frame that will hold up to 15 or 7 modules or a standalone enclosure that will hold 1 module

7707MRA-HD Application Configurations

FIBER TYPE	FIBERS	OPTICAL/LINK BUDGET	TRANSMIT SIDE		RECEIVE SIDE		DESCRIPTION
			ORDERING PRODUCT INFO	TX POWER	ORDERING PRODUCT INFO	RX SENSITIVITY	
Multi-Mode	2	< 1km	7707MTA13-HD-F2	-7dBm	7707MRA13-HD-F2	-23dBm	1310nm on Tx & Rx fibers
Single-Mode	2	16dB/45km	7707MTA13-HD-F2	-7dBm	7707MRA13-HD-F2	-23dBm	1310nm on Tx & Rx fibers
Single-Mode	1 (WDM)	20dB/57km	7707MTA15-HD-W	-1dBm	7707MRA13-HD-W	-21dBm	1310nm/1550nm, WDM, bi-directional on one fiber
Single-Mode	1 (CWDM)	19dB/76km**	7707MTAxx-HD-F2	0dBm	7707MRAxx-HD-F2	-23dBm	Different CWDM wavelengths for Tx & Rx, with 8 channel CWDM Mux/Demux**
Single-Mode	1 (CWDM)	24dB/100km**	7707MTAxx-HD-F2	0dBm	7707MRAxx-HD-F2-H	-28dBm	Different CWDM wavelengths for Tx & Rx, with 8 channel CWDM Mux/Demux**
Single-Mode	1 (DWDM)	25dB/120km***	7707MTADxxx-HD-F2	+7dBm	7707MRADxxx-HD-F2	-23dBm	Different DWDM wavelengths for Tx & Rx, with 8 channel DWDM Mux/Demux**

**Assumes 8 Ch CWDM Mux/Demux loss of 3.5dB
***Assumes 8 Ch DWDM Mux/Demux loss of 5dB

Fiber loss= 0.35/0.25dB per km @ 1310nm/1550nm

7707MRA-HD

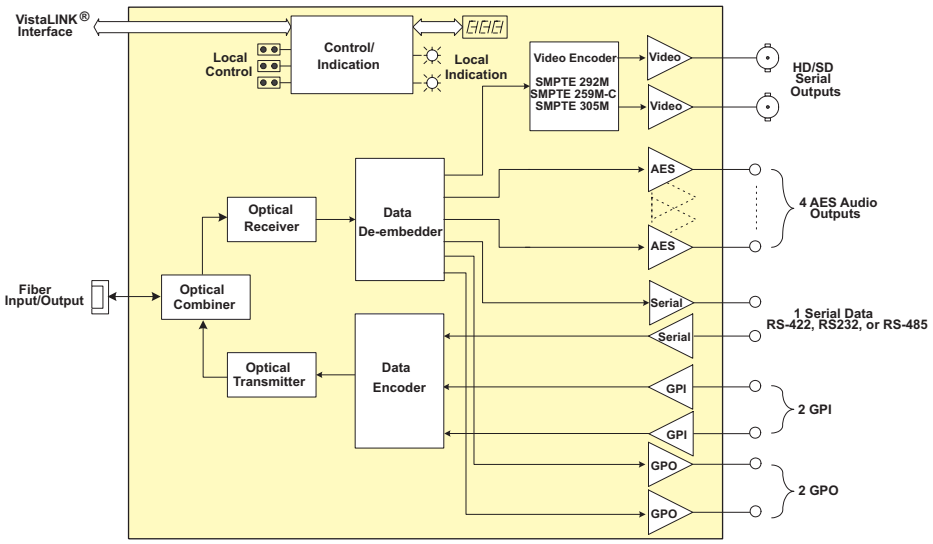

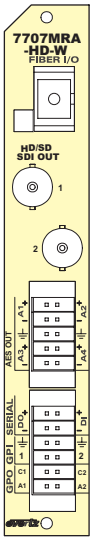

Specifications

Optical Input/Output:
Number of Outputs: 1 (Single fiber version), 2 (Dual fiber version)
Connector: Female SC/PC, ST/PC or FC/PC
Return Loss: > 14dB
Rise and Fall Time: 200 ps nominal
Wide Band Jitter: < 0.2 UI
Fiber Size: 9mm core/125mm overall
Input Optical Sensitivity: See Application Configuration Chart
Wavelengths:
Standard: 1310nm, 1550nm (nominal)
CWDM: 1270nm to 1610nm (See ordering information)
DWDM: C-Band/L-Band (ITU-T G.694.1 compliant)
Output Power:
1310nm FP: -7dBm ±1dBm
CWDM: 0dBm ±1dBm
DWDM: +7dBm ±1dBm

Serial Digital Video Outputs:
Number of Outputs: 2 regenerated
Standard: SMPTE 292M (HD-SDI), SMPTE 259M-C (SD-SDI), SMPTE 305.2M (SDTi)
Connector: BNC per IEC 60169-8 Amendment 2
Signal Level: 800mV nominal
DC Offset: 0V ±0.5V
Rise and Fall Time: 150ps nominal @ 1.485Gb/s, 600ps nominal @ 270Mb/s
Overshoot: < 10% of amplitude
Return Loss: > 15dB up to 1.5Gb/s
Wide Band Jitter: < 0.2 UI

AES Audio Outputs:
Number of Signals: 4 (user-selectable for balanced or unbalanced)
Standards: AES3-2003 (Balanced AES), SMPTE 276M (Unbalanced AES)
Connector: Multi-pin Removable Terminal Block
Signal Level:
Unbalanced: 1V p-p ±0.1V Differential
Balanced: 3.5V p-p ±0.1V
Resolution: Up to 24-bits
Sampling Rate: 48kHz
Rise/Fall Times:
Balanced: 20ns ±5ns
Unbalanced: 35ns ±5ns
Return Loss: > 15dB to 6MHz
Wideband Jitter: < 10ns p-p, with conditions of minimum to maximum cable length
Latency:
SRC enabled: < 6ms @ 48KHz, < 9ms @ 32KHz
SRC disabled: < 4ms @ 48KHz, < 6ms @ 32KHz
Impedance:
Unbalanced: 75Ω
Balanced: 110Ω

Serial Data:
Number of Signals: 2 input/output
Connector at Breakout: Multi-pin Removable Terminal Block
Signal Type: RS-422, RS-232, or RS-485 (selectable)
Input Termination: High impedance
Input Failsafe Bias: 5KΩ to 5V on DI+ (selectable)
Baud Rate: Up to 153Kb/s (selectable)

General Purpose Inputs:
Number of Signals: 2 input
Connector at Breakout: Multi-pin Removable Terminal Block
Type: Opto-isolated, active low
Input Voltage:
Safe Voltage Range: -20V to +10V
Off Condition (min): +3.5V
On condition (max): +2.5V (active low)
Input Current (min): 1mA
Input Current (max): 10mA (internally limited)

General Purpose Outputs:
Number of Outputs: 2
Type: "Dry Contact" relay closure
Connector: 1 pin on 16-pin removable terminal block
Signal Level: Normally open

Electrical:
Voltage: +12V DC
Power:
Non-DWDM: 9W
DWDM: 12W

Physical:
7700 or 7701 frame mounting
Number of slots: 1 (7707MRA13-HD-W)
2 (all except above)

Compliance:
Electrical Safety: CSA Listed to UL 60065-03, IEC 60065
Complies with CE Low voltage Directive
Laser Safety: Class 1 laser product
Complies with 24 CFR 1040.10 and 1040.11
IEC 60825-1
EMI/RFI: Complies with FCC Part 15, Class A
EU EMC directive

Ordering Information

7707MRA13-HD-F2 HD-SDI, 4 AES, Bi-directional RS232/422, GPI/O Fiber Receiver, dual fiber, 1310nm FP Tx & Rx, VistaLINK®
7707MRA13-HD-W HD-SDI, 4 AES, Bi-directional RS232/422, GPI/O Fiber Receiver, single fiber, WDM, 1310nm FP Tx, Rx on 1550nm, VistaLINK® (Use with 7707MTA15-HD-W)

For CWDM, please refer to the end of the fiber section for ordering information
7707MRAxx-HD-F2 HD-SDI, 4 AES, Bi-directional RS232/422, GPI/O Fiber Receiver, dual fiber, CWDM TX, VistaLINK®
7707MRAxx-HD-F2-H High Sensitivity Receiver

For DWDM, please refer to the end of the fiber section for ordering information
7707MRADxxx-HD-F2 HD-SDI, 4 AES, Bi-directional RS232/422, GPI/O Fiber Receiver, dual fiber, DWDM Tx, VistaLINK®
7707MRADxxx-HD-F2-H High Sensitivity Receiver

Ordering Options Rear Plate and Fiber Connector must be specified at time of order
Eg: Model +SC +3RU

Rear Plate Suffix
+3RU 3RU Rear Plate for use with 7700FR-C Multiframe
+1RU 1RU Rear Plate for use with 7701FR Multiframe
+SA Standalone Enclosure Rear Plate

Connector Suffix
+SC SC/PC
+SCF SC/PC connector with flap cover (-W version only)
+ST ST/PC
+FC FC/PC

Enclosures
7700FR-C 3RU Multiframe which holds up to 15 single slot modules
7701FR 1RU Multiframe which holds up to 3 single or dual slot modules
S7701FR Standalone enclosure

7707MTA-HD-F2, 7707MTA-HD-W

HD, SDI 4 AES Audio Bi-directional RS232/422, 2 GPI/GPO Fiber Transmitter

Features & Benefits

- Supports HD-SDI and SDI video
- Multiplexes up to 4 AES audio, bi-directional RS-232/422 and 2 GPIO with HD-SDI or SDI
- Supports all SMPTE 292M (1.485Gb/s) rates/standards
- Supports 525/625 line component 4:2:2 SDI @ 270Mb/s
- Supports 32, 44.1, 48kHz AES audio inputs
- Reclocked video output for additional signal distribution
- AES audio inputs can be synchronous or asynchronous to each other and/or to input video
- Dolby E compatible
- Embedded audio assignment/shuffle from input AES, input groups/channels and internal audio mixers
- Four stereo pair mixers allow left/right assignment and summing from input AES and input groups/channels
- Adjustable AES delay up to 50ms
- Comprehensive signal and card status monitoring via four digit card edge display or remotely through SNMP and VistaLINK®
- VistaLINK® capability is available when modules are used with the 3RU 7700FR-C frame and a 7700FC VistaLINK® Frame Controller module in slot 1 of the frame
- Local display of optical signal strength, video, audio and data presence, video format, GPI and GPO status
- Automatic coaxial input equalization up to 130m at 1.485Gb/s and 300m at 270Mb/s (Belden 1694A)
- Accepts any wavelength in the 1270nm to 1610nm range
- Optical output wavelengths of 1310nm, 1550nm, and up to sixteen CWDM wavelengths (ITU-T G.694.2 compliant)
- DWDM wavelengths (ITU-G.694.1 compliant) also available
- Supports single-mode and multi-mode fiber optic cable
- Fully hot-swappable from front of frame
- Occupies a single or dual card slot and can be housed in a 1RU frame that will hold up to 3 modules, a 3RU frame that will hold up to 7 modules or a standalone enclosure that will hold 1 module

7707MTA-HD Application Configuration

FIBER TYPE	FIBERS	OPTICAL/LINK BUDGET	TRANSMIT SIDE		RECEIVE SIDE		DESCRIPTION
			ORDERING PRODUCT INFO	TX POWER	ORDERING PRODUCT INFO	RX SENSITIVITY	
Multi-Mode	2	< 1km	7707MTA13-HD-F2	-7dBm	7707MRA13-HD-F2	-23dBm	1310nm on Tx & Rx fibers
Single-Mode	2	16dB/45km	7707MTA13-HD-F2	-7dBm	7707MRA13-HD-F2	-23dBm	1310nm on Tx & Rx fibers
Single-Mode	1 (WDM)	20dB/57km	7707MTA15-HD-W	-1dBm	7707MRA13-HD-W	-21dBm	1310nm/1550nm, WDM, bi-directional on one fiber
Single-Mode	1 (CWDM)	19dB/76km**	7707MTAxx-HD-F2	0dBm	7707MRAxx-HD-F2	-23dBm	Different CWDM wavelengths for Tx & Rx, with 8 channel CWDM Mux/Demux**
Single-Mode	1 (CWDM)	24dB/96km**	7707MTAxx-HD-F2	0dBm	7707MRAxx-HD-F2-H	-28dBm	Different CWDM wavelengths for Tx & Rx, with 8 channel CWDM Mux/Demux**
Single-Mode	1 (DWDM)	25dB/100km***	7707MTADxxx-HD-F2	+7dBm	7707MRADxxx-HD-F2	-23dBm	Different DWDM wavelengths for Tx & Rx, with 8 channel DWDM Mux/Demux**

**Assumes 8 Ch CWDM Mux/Demux loss of 3.5dB
***Assumes 8 Ch DWDM Mux/Demux loss of 5dB

Fiber loss= 0.35/0.25dB per km @ 1310nm/1550nm

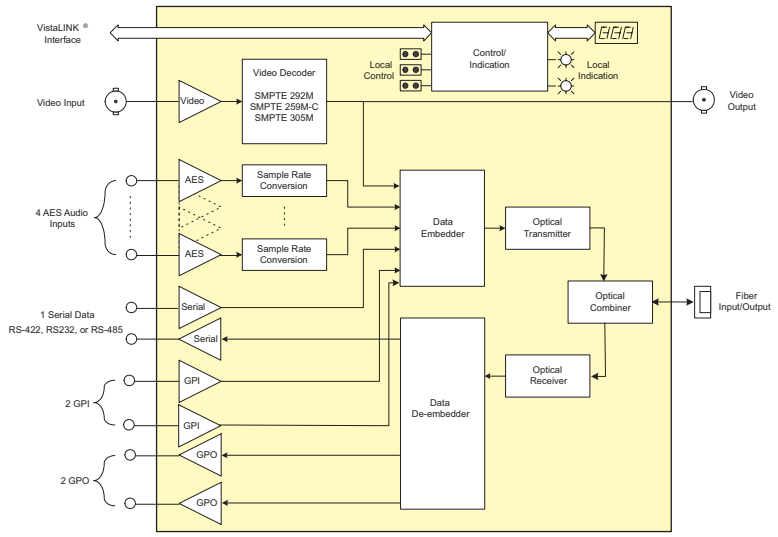

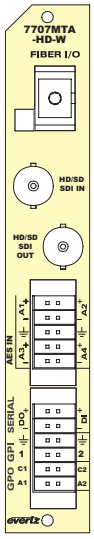

Specifications

Serial Digital Video Input:
Number of Signals: 1
Standards: SMPTE 292M (HD-SDI)
SMPTE 259M-C (SD-SDI)
SMPTE305.2M (SDTi)
Connector: BNC per IEC 60169-8 Amendment 2
Equalization: Automatic to 100m (typ) @ 1.485Gb/s with Belden 1694A or equivalent cable
Automatic to 250m (typ) @ 270Mb/s with Belden 1694A or equivalent cable
Return Loss: > 15dB up to 1.5GHz

Serial Digital Video Output:
Number of Signals: 1
Standards: SMPTE 292M (HD-SDI), SMPTE 259M-C (SD-SDI), SMPTE305.2M (SDTi), EN500083-9 (DVB-ASI)
Connector: BNC per IEC 60169-8 Amendment 2
Signal Level: 800mV nominal
DC Offset: 0V ±0.5V
Rise and Fall Time: 150ps nominal @1.485Gb/s
600ps nominal @270Mb/s
Overshoot: < 10% of amplitude
Return Loss: > 15dB up to 1.5GHz
High Freq. Jitter: < 0.2 UI

AES Audio Inputs:
Number of Signals: 4
Standards: AES3-2003 (Balanced AES)
SMPTE 276M (Unbalanced AES)
Connector: Multi-pin Removable Terminal Block
Sampling Rate: 32kHz, 44.1kHz, 48kHz
Resolution: up to 24 bits
Minimum Input: < 200mV p-p
Maximum Input:
Balanced: > 7V p-p
Unbalanced: > 1.2V p-p
Equalization:
Balanced: < 1500ft @ 48kHz, with Belden 1800B, and 2V p-p source signal
Unbalanced: < 1200m @ 48kHz, with Belden 8281, and 1V p-p source signal
Impedance:
Balanced: 110Ω
Unbalanced: 75Ω
Return Loss: > 15dB, from 1MHz to 6MHz
Wideband Jitter: < 10ns p-p, with conditions of minimum to maximum cable length

Serial Data:
Number of Signals: 1 input/output
Connector at Breakout:
Multi-pin Removable Terminal Block
Signal Type: RS-422, RS-232, or RS-485 (selectable)
Input Termination: High impedance
Input Failsafe Bias: 5kΩ to 5V on DI+ (selectable)
Baud Rate: Up to 153kb/s (selectable

General Purpose Inputs:
Number of Signals: 2
Connector at Breakout:
Multi-pin Removable Terminal Block
Type: Opto-isolated, Active low
Input Voltage:
Safe Voltage Range:
-20V to +10V
Off Condition (min): +3.5V
On Condition (max):+2.5V(active low)
Input Current (min): 1mA
Input Current (max):10mA(internally limited)

General Purpose Outputs:
Number of Signals: 2 GPO Outputs,
Connector at Breakout:
Multi-pin Removable Terminal Block
Output Type: Dry contact relay closure to GPO COMMON, normally open
Output Current (min): 100mA

Optical Input/Output:
Number of Connections:
1 (Single fiber version)
2 (Dual fiber version)
Connector: Female SC/PC, ST/PC or FC/PC
Return Loss: > 14dB
Rise and Fall Time: 200 ps nominal
Wide Band Jitter: < 0.20 UI
Fiber Size: 9mm core/125mm overall
Input Optical Sensitivity:
See Applications Configuration Chart
Wavelengths:
Standard: 1310nm, 1550nm (nominal)
CWDM: 1270nm to 1610nm (See ordering information)
DWDM: C-Band/L-Band (ITU-T G.694.1 compliant) (See ordering information)
Output Power:
1310nm FP: -7dBm ±1dBm
CWDM: 0dBm ±1dBm
DWDM: +7dBm ±1dBm

Electrical:
Voltage: +12V DC
Power:
Non-DWDM: 9W
DWDM: 12W

Physical:
7700 or 7701 frame mounting
Number of slots: 1 (7707MTA15-HD-W)
2 (All except above)

Ordering Information

7707MTA13-HD-F2 HD-SDI, 4 AES, Bi-directional RS232/422, GPI/O Fiber Transmitter, dual fiber, 1310nm FP Tx & Rx, VistaLINK®
7707MTA15-HD-W HD-SDI, 4 AES, Bi-directional RS232/422, GPI/O Fiber Transmitter, single fiber, WDM, 1550nm DFB Tx, Rx on 1310nm, VistaLINK® (Use with 7707MRA13-HD-W).

For CWDM, please refer to the end of the fiber section for ordering information
7707MTAxx-HD-F2 HD-SDI, 4 AES, Bi-directional RS232/422, GPI/O Fiber Transmitter, dual fiber, CWDM Tx, VistaLINK®
7707MTAxx-HD-F2-H HD-SDI, 4 AES, Bi-directional RS232/422, GPI/O Fiber Transmitter, dual fiber, CWDM Tx, High Sensitivity, VistaLINK®

For DWDM, please refer to the end of the fiber section for ordering information
7707MTADxxx-HD-F2 HD-SDI, 4 AES, Bi-directional RS232/422, GPI/O Fiber Transmitter, dual fiber, DWDM Tx, VistaLINK®
7707MTADxxx-HD-F2-H HD-SDI, 4 AES, Bi-directional RS232/422, GPI/O Fiber Transmitter, dual fiber, DWDM Tx, High Sensitivity, VistaLINK®

Ordering Options Rear Plate and Fiber Connector must be specified at time of order
Eg: Model +SC +3RU

Rear Plate Suffix
+3RU 3RU Rear Plate for use with 7700FR-C Multiframe
+1RU 1RU Rear Plate for use with 7701FR Multiframe
+SA Standalone Enclosure Rear Plate

Connector Suffix
+SC SC/PC
+SCF SC/PC connector with flap cover (-W version only)
+ST ST/PC
+FC FC/PC

Enclosures
7700FR-C 3RU Multiframe which holds up to 15 single slot modules
7701FR 1RU Multiframe which holds up to 3 single or dual slot modules
S7701FR Standalone enclosure

7707AT-8, 7707AT-8U & 7707AT-16

8/16 Channel AES Audio Fiber Transmitter Mux

Features & Benefits

- Eight or sixteen AES audio fiber optic transmitter
- Dolby E compatible
- 7707AT-8 and 7707AT-16 versions provide interface to balanced or unbalanced signals
- 7707AT-8U version provides interface to unbalanced signals via BNC connections
- AES audio sample rate detection is provided independently for each channel
- Audio monitoring via card-edge headphone jack with adjustable volume
- All configuration settings are controllable through the card-edge user interface, or remotely through SNMP and VistaLINK®
- DWDM wavelengths also available (ITU-T G.694.1 compliant)
- Optical output wavelengths of 1310nm, 1550nm, and up to sixteen CWDM wavelengths (ITU-T G.694.2 compliant)
- Supports single-mode and multi-mode fiber optic cable
- SC/PC, ST/PC, or FC/PC fiber connector options
- Fully hot-swappable from front of frame
- Comprehensive signal and card status monitoring via four digit card edge display or remotely through SNMP and VistaLINK®
- VistaLINK® capability is available when modules are used with the 3RU 7700FR-C frame and a 7700FC VistaLINK® Frame Controller module in slot 1 of the frame

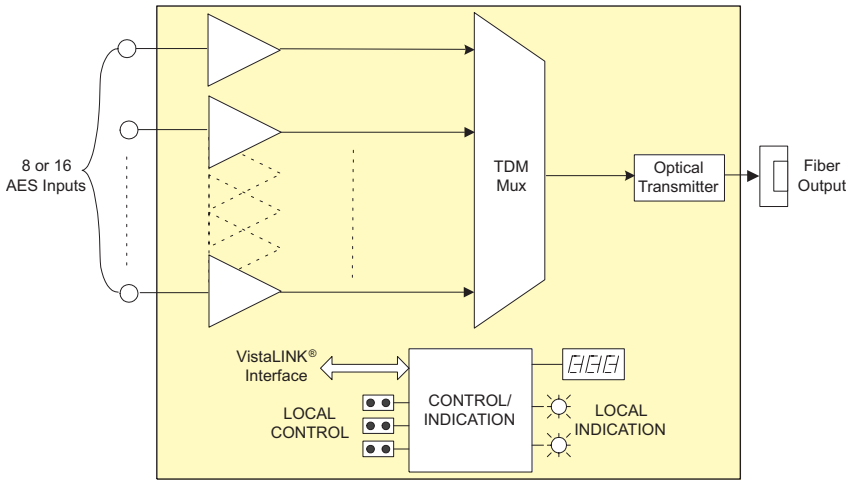

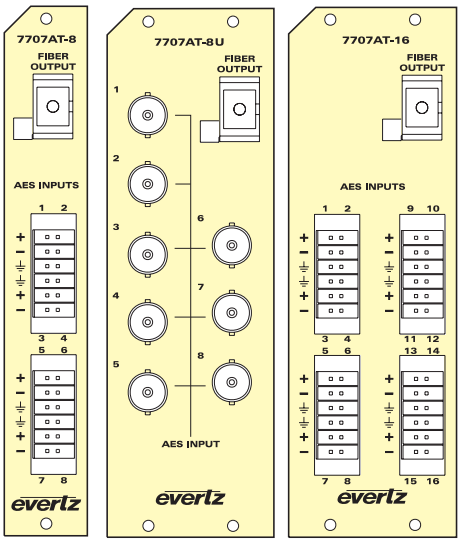

Specifications

AES Audio Inputs:
Standard:
7707AT-8U: SMPTE 276M - Unbalanced AES, Dolby E compatible
7707AT-8/16: AES3-1992, Balanced or Unbalanced (selectable), Dolby E compatible

Number of Inputs:
7707AT-8/8U: 8
7707AT-16: 16
Connectors:
7707AT-8U: BNC per IEC 60169-8 Amendment 2
7707AT-8/16: Multi-pin Removable Terminal Blocks
Input Sample Rate: 32 to 48kHz
Input Impedance:
Unbalanced: 75Ω
Balanced: 110Ω
Input Return Loss: > 15dB
Input Amplitude (max):
Unbalanced: 1.2V p-p
Balanced: 7V p-p
Input Amplitude (min):
Unbalanced: 320mV p-p
Balanced: 200mV p-p
Cable Equalization (max):
Unbalanced: 450m (≈1900ft) of Belden 1694A cable
Balanced: 1500m (≈4900ft) of Belden 1800B cable

Optical Output:
Connector: SC/PC, ST/PC, FC/PC female housing
Output Wavelengths: See Ordering Information
Output Power:
1310nm FP (Standard): -7dBm ±1dBm
CWDM DFB: 0dBm ±1dBm
DWDM DFB: +7dBm ±1dBm

Electrical:
Voltage: 12V DC
Power: 7707AT-8/-8U: 6W (Non DWDM) or 9W (DWDM)
7707AT-16: 8W (Non DWDM) or 11W (DWDM)

Physical:
7700 frame mounting:
Number of Slots:
7707AT-8U: 2 slots
7707AT-8: 1 slot
7707AT-16: 2 slots
7701 frame mounting:
Number of Slots: 1 for all versions

Compliance:
Electrical Safety: CSA Listed to UL 60065-03, IEC 60065
Complies with CE Low voltage Directive
Laser Safety: Class 1 laser product
Complies with 24 CFR 1040.10 and 1040.11
IEC 60825-1

Ordering Information

7707AT13-8	Eight channel AES Audio Fiber Transmitter Mux , 1310nm FP, VistaLINK®
7707AT13-8U	Eight channel AES Unbalanced Audio Fiber Transmitter Mux, 1310nm FP, VistaLINK®, AES on BNCs
7707AT13-16	Sixteen channel AES Audio Fiber Transmitter Mux, 1310nm FP, VistaLINK®
7707AT15-8	Eight channel AES Audio Fiber Transmitter Mux, 1550nm DFB, VistaLINK®
7707AT15-8U	Eight channel AES Unbalanced Audio Fiber Transmitter Mux, 1550nm DFB, VistaLINK®
7707AT15-16	Sixteen channel AES Audio Fiber Transmitter Mux , 1550nm DFB, VistaLINK®

For CWDM, please refer to the end of the fiber section for ordering information

7707ATxx-8	Eight channel AES Audio Fiber Transmitter Mux, CWDM wavelength, VistaLINK®
7707ATxx-8U	Eight channel AES Unbalanced Audio Fiber Transmitter Mux, CWDM wavelength, VistaLINK®
7707ATxx-16	Sixteen channel AES Audio Fiber Transmitter Mux, CWDM wavelength, VistaLINK®

For DWDM, please refer to the end of the fiber section for ordering information

7707ATDxxx-8	Eight channel AES Audio Fiber Transmitter Mux, DWDM wavelength, VistaLINK®
7707ATDxxx-8U	Eight channel AES Unbalanced Audio Fiber Transmitter Mux, DWDM wavelength, VistaLINK®
7707ATDxxx-16	Sixteen channel AES Audio Fiber Transmitter Mux, DWDM wavelength, VistaLINK®

Ordering Options Rear Plate and Fiber Connector must be specified at time of order
Eg: Model +SC +3RU

Rear Plate Suffix

+3RU	3RU Rear Plate for use with 7700FR-C Multiframe
+1RU	1RU Rear Plate for use with 7701FR Multiframe
+SA	Standalone Enclosure Rear Plate

Connector Suffix

+SC	SC/PC
+ST	ST/PC
+FC	FC/PC

Enclosures

7700FR-C	3RU Multiframe which holds up to 15 single slot modules
7701FR	1RU Multiframe which holds up to 3 single or dual slot modules
S7701FR	Standalone enclosure

Features & Benefits

- Eight or twelve professional quality analog audio fiber optic transmitter
- Adjustable audio detection for each channel
- Audio monitoring via card-edge headphone jack with adjustable volume
- All configuration settings controllable through the card-edge user interface, or remotely through SNMP and VistaLINK®
- Optical output wavelengths of 1310nm, 1550nm, and up to sixteen CWDM wavelengths (ITU-T G.694.2 compliant)
- DWDM wavelengths also available (ITU-T G.694.1 compliant)
- Supports single-mode and multi-mode fiber optic cable
- SC/PC, ST/PC, or FC/PC fiber connector options
- Fully hot-swappable from front of frame
- Comprehensive signal and card status monitoring via four digit card edge display or remotely through SNMP and VistaLINK®
- VistaLINK® capability is available when modules are used with the 3RU 7700FR-C frame and a 7700FC VistaLINK® Frame Controller module in slot 1 of the frame

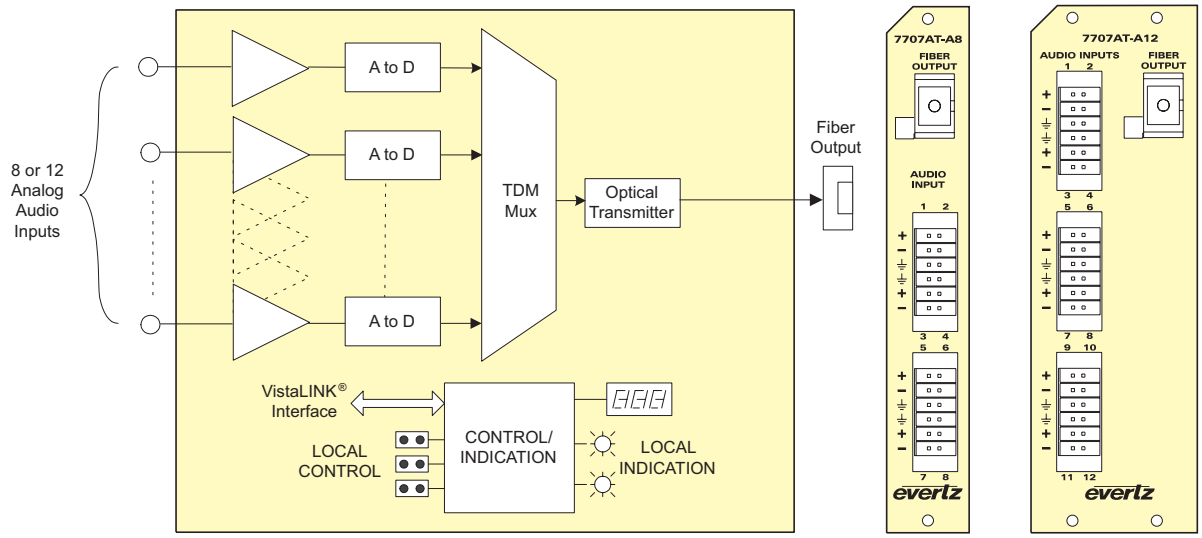

Specifications

Analog Audio Inputs:
Number of Inputs:
7707AT-A8: 8
7707AT-A12: 12
Connectors: Multi-pin Removable Terminal Blocks
Input Level: +24dBu (max)
Frequency Response: ±0.1dB (max, 20Hz to 20kHz)
THD + Noise: -90dB or 0.003% (max, 20Hz to 20kHz, @0dBFS)
Crosstalk: -100dB (max, 20Hz to 20kHz, measured channel connected at input)
S/N Ratio: 100dB (min)
Channel Phase: ±0.5° (max, 20Hz to 20kHz)
Input Impedance: 10kΩ (min, differential)
Resolution: 24 Bits

Optical Output:
Connector: SC/PC, ST/PC, FC/PC female housing
Output Wavelengths: See Ordering Information
Output Power:
1310nm FP (Standard): -7dBm (nom) ±1dBm
CWDM DFB: 0dBm (nom) ±1dBm
DWDM DFB: +7dBm (nom) ±1dBm

Electrical:
Voltage: 12V DC
Power:
7707AT-A8:
Non DWDM Laser: 8W (max)
DWDM Laser: 10W (max)
7707AT-A12:
Non DWDM Laser: 10W (max)
DWDM Laser: 12W (max)

Physical:
7700 frame mounting:
Number of Slots:
7707AT-A8: 1 slot
7707AT-A12: 2 slots
7701 frame mounting:
Number of Slots: 1 slot

Compliance:
Electrical Safety: CSA Listed to UL 60065-03, IEC 60065
Complies with CE Low voltage Directive
Laser Safety: Class 1 laser product
Complies with 24 CFR 1040.10 and 1040.11
IEC 60825-1

EMI/RFI: Complies with FCC Part 15, Class A
EU EMC Directive

Ordering Information

7707AT13-A8	Eight channel Analog Audio Fiber Transmitter Mux, 1310nm FP, VistaLINK®
7707AT15-A8	Eight channel Analog Audio Fiber Transmitter Mux, 1550nm DFB, VistaLINK®
7707AT13-A12	Twelve channel Analog Audio Fiber Transmitter Mux , 1310nm FP, VistaLINK®
7707AT15-A12	Twelve channel Analog Audio Fiber Transmitter Mux , 1550nm DFB, VistaLINK®

For CWDM, please refer to the end of the fiber section for ordering information

7707ATxx-A8	Eight channel Analog Audio Fiber Transmitter Mux , CWDM wavelength
7707ATxx-A12	Twelve channel Analog Audio Mux Fiber Transmitter, CWDM wavelength

For DWDM, please refer to the end of the fiber section for ordering information

7707ATDxxx-A8	Eight channel Analog Audio Mux Fiber Transmitter, DWDM wavelength
7707ATDxxx-A12	Twelve channel Analog Audio Mux Fiber Transmitter, DWDM wavelength

Ordering Options Rear Plate and Fiber Connector must be specified at time of order
Eg: Model +SC +3RU

Rear Plate Suffix

+3RU	3RU Rear Plate for use with 7700FR-C Multiframe
+1RU	1RU Rear Plate for use with 7701FR Multiframe
+SA	Standalone Enclosure Rear Plate

Connector Suffix

+SC	SC/PC
+ST	ST/PC
+FC	FC/PC

Fiber Optic Patch Cable
please refer to the end of the fiber section for details

Enclosures

7700FR-C	3RU Multiframe which holds up to 15 single slot modules
7701FR	1RU Multiframe which holds up to 3 single or dual slot modules
S7701FR	Standalone enclosure

7707AR-8, 7707AR-8U & 7707AR-16

8/16 Channel AES Audio Fiber Receiver Demux

Features & Benefits

- Eight or sixteen AES audio fiber optic receiver
- Dolby E compliant
- 7707AR-8 and 7707AR-16 versions provide interface to balanced or unbalanced signals
- 7707AR-8U version provides interface to unbalanced signals via BNC connections
- AES audio sample rate detection provided independently for each channel
- Audio monitoring via card-edge headphone jack with adjustable volume
- All configuration settings controllable through the card-edge user interface, or remotely through SNMP and VistaLINK®
- Wide-band optical input is compatible with 1310nm, 1550nm, CWDM, or DWDM wavelengths
- Supports single-mode and multi-mode fiber optic cable
- SC/PC, ST/PC, or FC/PC fiber connector options
- Fully hot-swappable from front of frame
- Comprehensive signal and card status monitoring via four digit card edge display or remotely through SNMP and VistaLINK®
- VistaLINK® capability is available when modules are used with the 3RU 7700FR-C frame and a 7700FC VistaLINK® Frame Controller module in slot 1 of the frame

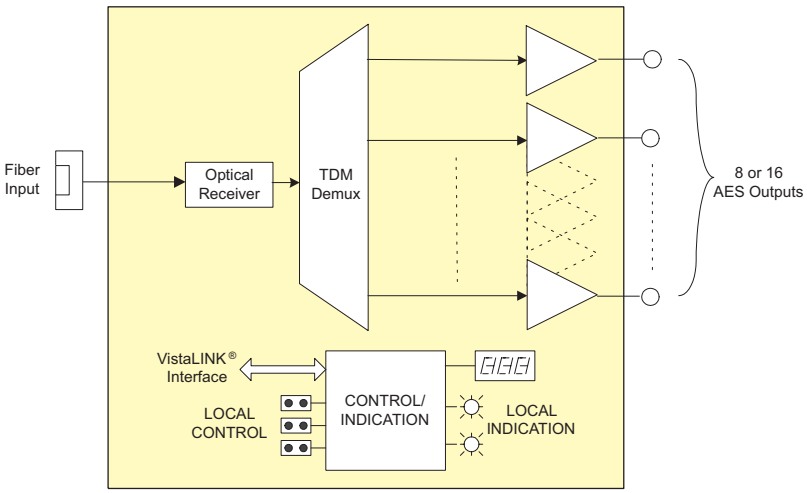

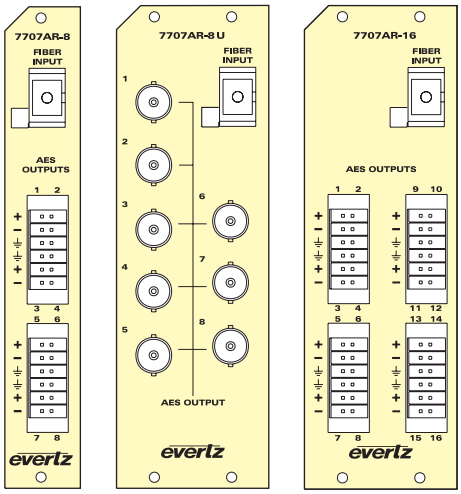

Specifications

AES Audio Outputs:
Standard:
7707AR-8U: SMPTE 276M - Unbalanced AES, Dolby E compliant
7707AR-8/16: AES3-1992, Balanced or Unbalanced (selectable), Dolby E compliant
Number of Outputs:
7707AR-8/8U: 8
7707AR-16: 16
Connectors:
7707AR-8U: BNC per IEC 60169-8 Amendment 2
7707AR-8/16: Multi-pin Removable Terminal Blocks
Output Sample Rate: 32 to 48kHz (same as input signal at 7707AT)
Output Impedance:
Unbalanced: 75Ω
Balanced: 110Ω
Output Return loss: > 15dB
Output Amplitude:
Unbalanced: 1V p-p to ±0.1V p-p
Balanced: 2V p-p to ±0.1V p-p
Output Rise/Fall Times:
Unbalanced: 35ns ±5ns
Balanced: 20ns ±5ns
Output Jitter: < 0.1 UI

Optical Input:
Connector: SC/PC, ST/PC, FC/PC female housing
Input Wavelength: 1270 to 1610nm
Input Power (max): 0dBm
Input Optical Sensitivity: -28dBm

Electrical:
Voltage: 12V DC
Power (max): 6W
EMI/RFI: Complies with FCC Part 15, Class A EU EMC Directive

Physical:
7700 frame mounting:
Number of Slots:
7707AR-8U: 2 slots
7707AR-8: 1 slot
7707AR-16: 2 slots
7701 frame mounting:
Number of Slots: 1 slot all versions

Ordering Information

7707AR-8	Eight Channel AES Audio Fiber Receiver Demux, VistaLINK® Monitoring
7707AR-8U	Eight Channel Unbalanced AES Audio Fiber Receiver Demux, VistaLINK® Monitoring
7707AR-16	Sixteen Channel AES Audio Fiber Receiver Demux, VistaLINK® Monitoring

Ordering Options Rear Plate and Fiber Connector must be specified at time of order
Eg: Model +SC +3RU

Rear Plate Suffix

+3RU	3RU Rear Plate for use with 7700FR-C Multiframe
+1RU	1RU Rear Plate for use with 7701FR Multiframe
+SA	Standalone Enclosure Rear Plate

Connector Suffix

+SC	SC/PC
+ST	ST/PC
+FC	FC/PC

Fiber Optic Patch Cable

CB-FP1M-SCPC	Single mode fiber cable, 1m, SC/PC male termination
CB-FP1M-STPC	Single mode fiber cable, 1m, ST/PC male termination
CB-FP5M-SCPC	Single mode fiber cable, 5m, SC/PC male termination
CB-FP5M-STPC	Single mode fiber cable, 5m, ST/PC male termination
CB-FP10M-SCPC	Single mode fiber cable, 10m, SC/PC male termination
CB-FP10M-STPC	Single mode fiber cable, 10m, ST/PC male termination

Enclosures

7700FR-C	3RU Multiframe which holds up to 15 single slot modules
7701FR	1RU Multiframe which holds up to 3 single or dual slot modules
S7701FR	Standalone enclosure

Features & Benefits

- Eight or twelve professional quality analog audio fiber optic receiver
- Adjustable audio detection for each channel
- Adjustable audio gain for each channel
- Audio monitoring via card-edge headphone jack
- All configuration settings controllable through the card-edge interface, or remotely through SNMP and VistaLINK®
- Wide-band optical input compatible with 1310nm, 1550nm, CWDM, or DWDM transmission wavelengths
- Supports single-mode and multi-mode fiber optic cable
- SC/PC, ST/PC, or FC/PC fiber connector options
- Fully hot-swappable from front of frame
- Comprehensive signal and card status monitoring via four digit card edge display or remotely through SNMP and VistaLINK®
- VistaLINK® capability is available when modules are used with the 3RU 7700FR-C frame and a 7700FC VistaLINK® Frame Controller module in slot 1 of the frame

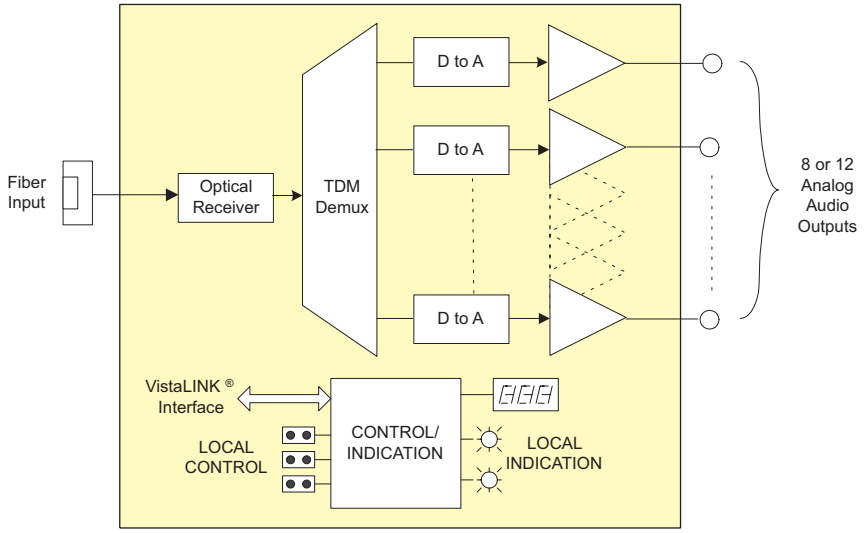

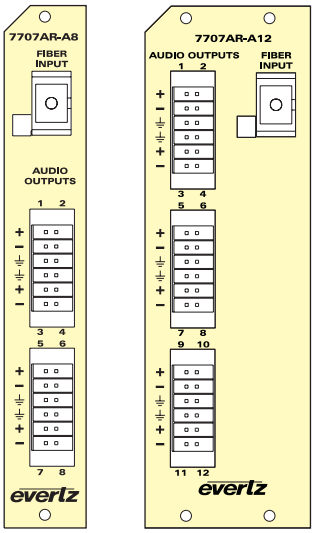

Specifications

Analog Audio Outputs:
Number of Outputs:
7707AR-A8: 8
7707AR-A12: 12
Connectors: Multi-pin Removable Terminal Blocks
Output Level:
Into High Impedance: +24dBu (max)
Into 600Ω: +23dBu (max)
Frequency Response: ±0.1dB (max, 20Hz to 20kHz)
THD + Noise: -90dB or 0.003% (max, 20Hz to 20kHz, @0dBFS)
Crosstalk: -100dB (max, 20Hz to 20kHz, measured channel connected at input)
S/N Ratio: 100dB (min)
Channel Phase: ±0.5° (max, 20Hz to 20kHz)
Output Impedance: 66Ω (nom, differential)
Adjustable Gain: -10dB to +10dB (0.5dB increments)

Optical Input:
Connector: SC/PC, ST/PC, FC/PC female housing
Input Wavelength: 1270 to 1610nm
Input Power (Max): 0dBm
Input Optical Sensitivity: -28dBm

Electrical:
Voltage: 12V DC
Power:
7707AR-A8: 13.5W (max)
7707AR-A12: 18.5W (max)
EMI/RFI: Complies with FCC Part 15, Class A EU EMC Directive

Physical:
7700 frame mounting:
Number of Slots:
7707AR-A8: 1 slot
7707AR-A12: 2 slots
7701 frame mounting:
Number of Slots: 1 slot

Ordering Information

7707AR-A8	Eight Channel Analog Audio Fiber Receiver, Demux VistaLINK® Monitoring
7707AR-A12	Twelve Channel Analog Audio Fiber Receiver, Demux VistaLINK® Monitoring

Ordering Options Rear Plate and Fiber Connector must be specified at time of order
Eg: Model +SC +3RU

Rear Plate Suffix

+3RU	3RU Rear Plate for use with 7700FR-C Multiframe
+1RU	1RU Rear Plate for use with 7701FR Multiframe
+SA	Standalone Enclosure Rear Plate

Connector Suffix

+SC	SC/PC
+ST	ST/PC
+FC	FC/PC

Fiber Optic Patch Cable

CB-FP1M-SCPC	Single mode fiber cable, 1m, SC/PC male termination
CB-FP1M-STPC	Single mode fiber cable, 1m, ST/PC male termination
CB-FP5M-SCPC	Single mode fiber cable, 5m, SC/PC male termination
CB-FP5M-STPC	Single mode fiber cable, 5m, ST/PC male termination
CB-FP10M-SCPC	Single mode fiber cable, 10m, SC/PC male termination
CB-FP10M-STPC	Single mode fiber cable, 10m, ST/PC male termination

Enclosures

7700FR-C	3RU Multiframe which holds up to 15 single slot modules
7701FR	1RU Multiframe which holds up to 3 single or dual slot modules
S7701FR	Standalone enclosure

Features & Benefits

- Extends up to 3 or 8 independent channels of intercom communication over a single fiber optic link
- Configurable interface to:
  - RTS-Telex Matrix: 4-Wire Audio, RS-485 Data, GPIO
  - ClearCom Matrix: 4-Wire Audio, RS-422 Data, GPIO
  - RTS-Telex Party-Line: 2-Wire Audio, GPIO
  - ClearCom Party-line: 2-Wire Audio, GPIO
- Independent channels can simultaneously accommodate different intercom types
- User-friendly selection of intercom interfaces via programmed profiles
- All configurations and adjustments are controllable through the card-edge user interface or remotely via SNMP and VistaLINK® - capable capability
- Selectable termination, and failsafe bias settings for RS422/485 data inputs
- Provides 2 general-purpose inputs (GPIs), and 2 general purpose outputs (GPOs)
- Comprehensive signal and card status monitoring via four digit card edge display or remotely through SNMP and VistaLINK®
- VistaLINK® capability is available when modules are used with the 3RU 7700FR-C frame and a 7700FC VistaLINK® Frame Controller module in slot 1 of the frame
- Optical output wavelengths of 1310nm, 1550nm, and up to sixteen CWDM wavelengths (ITU-T G.694.2 compliant)
- DWDM wavelengths (ITU-T G.694.1 compliant) also available
- Compatible with single-mode and multi-mode fiber optic cable (dual fiber version)
- Fully hot-swappable from front of frame
- Occupies two card slots and can be housed in a 1 RU frame which holds up to 3 modules, a 3RU frame which holds up to 7 dual slot modules or a standalone enclosure which holds 1 module

7707IT-3 / 7707IT-8 Application Configurations

FIBER TYPE	FIBERS	OPTICAL/LINK BUDGET	TRANSMIT SIDE		RECEIVE SIDE		DESCRIPTION
			ORDERING PRODUCT INFO	TX POWER	ORDERING PRODUCT INFO	RX SENSITIVITY	
Multi-Mode	2	< 3km	7707IT13-3-F2 7707IT13-8-F2	-7dBm	7707IT13-3-F2 7707IT13-8-F2	-28dBm	1310nm on Tx & Rx fibers
Single-Mode	2	21dB/60km	7707IT13-3-F2 7707IT13-8-F2	-7dBm	7707IT13-3-F2 7707IT13-8-F2	-28dBm	1310nm on Tx & Rx fibers
Single-Mode	1 (WDM)	25dB/71km*	7707IT13M-3-W 7707IT13M-8-W	-1dBm	7707IT15-3-W 7707IT15-8-W	-26dBm	1310nm/1550nm WDM bi-directional on one fiber
Single-Mode	1 (CWDM)	24dB/96km**	7707ITxx-3-F2 7707ITxx-8-F2	0dBm	7707ITyy-3-F2 7707ITyy-8-F2	-28dBm	Different CWDM wavelengths for Tx & Rx, with 8 channel CWDM Mux/Demux**
Single-Mode	1 (DWDM)	30dB/120km***	7707ITDxxx-3-F2 7707ITDxxx-8-F2	+7dBm	7707ITDyyy-3-F2 7707ITDyyy-8-F2	-28dBm	Different DWDM wavelengths for Tx & Rx, with 8 channel DWDM Mux/Demux***

**Assumes 8 Ch CWDM Mux/Demux loss of 3.5dB
***Assumes 8 Ch DWDM Mux/Demux loss of 5dB

Fiber loss= 0.35/0.25dB per km @ 1310nm/1550nm

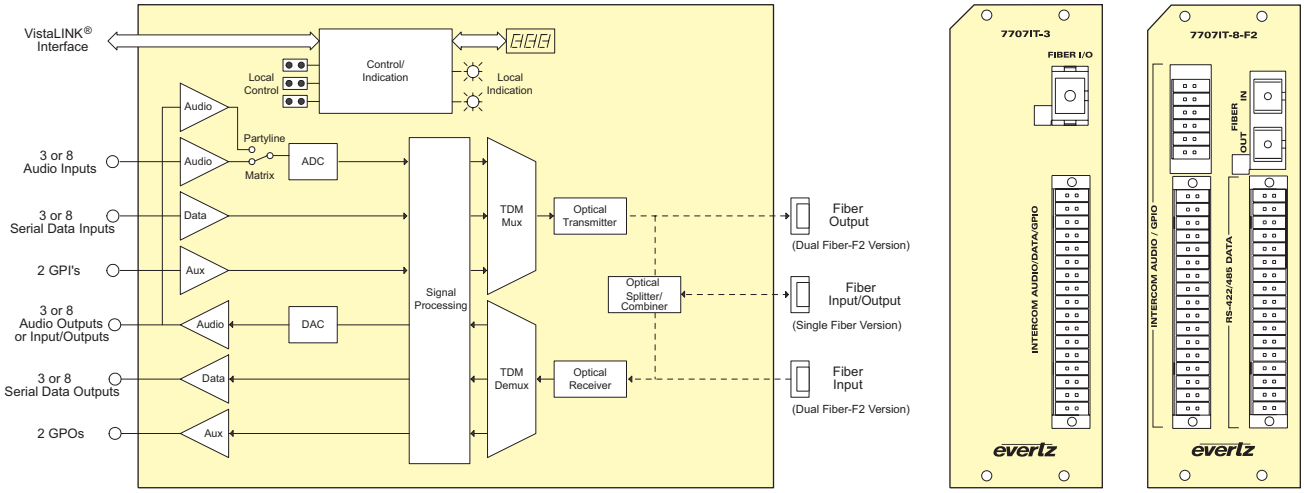

Specifications

Analog Audio:
Balanced/Matrix Type Audio
Number of Signals:
7707IT-3: 3 inputs, 3 outputs
7707IT-8: 8 inputs, 8 outputs
Type: Analog Audio, Balanced
Industry Standards: ClearCom, RTS-Telex
Connector: Multi-pin removable terminal block
Input Impedance: > 10kΩ
Output Impedance: 66Ω
Signal Resolution: 24-bit
Sampling Rate: 52.7kHz
Frequency Response: 20Hz to 20kHz
Gain Flatness: ±2dB
Input Level(max): +20dBu
Output Level(max):
Into 10KW +20dBu
Into 600W +19dBu
Signal/Noise Ratio: > 90dB
THD: < 0.01%
Crosstalk: < -80dB
Controllable Gain: -10dB to +10dB

Unbalanced/Party-Line Type Audio:
Number of Signals
7707IT-3: 3
7707IT-8: 8
Type: Analog Audio, Full-duplex, Unbalanced
Industry Standards: ClearCom, RTS-Telex
Connector: Multi-pin removable terminal block
Signal Coupling: AC coupled (accommodates 30V 'wet' inputs)
Bridging Impedance: > 10kΩ
Signal Resolution: 24-bit
Sampling Rate: 52.7kHz
Sidetone Null: > 25dB
Sidetone Null Range: 100Ω to 300Ω load
Frequency Response: 120Hz to 20kHz
Gain Flatness: ±2dB
Input Level(max): +5dBu
Output Level(max): +5dBu (into 200W load)
Signal/Noise Ratio: > 75dB
THD: < 0.1%
Crosstalk: < -60dB
Controllable Gain: -5dB to +5dB (into 200W load)
Receive Signaling: 4V DC min (ClearCom), 20kHz ±500Hz (RTS)
Send Signaling: 11V DC min (ClearCom), 20kHz ±100Hz (RTS)

Serial Data:
RS-422 /RS-485 Type Data
Number of Signals:
7707IT-3: 3
7707IT-8: 8
Connector: Multi-pin removable terminal block
Signal Type: RS-485 or RS-422 (selectable)
Input Termination: 120Ω or Open (selectable)
Input Failsafe Bias: 200mV (3.3mA into 60Ω) or none (selectable)
Bit Rate:
RS485: Compatible with all Telex RS485 rates
RS422: 460kb/s

Optical Input/Output:
Number: 1 (Standard and -W Single Fiber Version)
2 (-F2 Dual Fiber Version)
Connector at Frame: SC/PC, ST/PC, FC/PC female housing
Input Wavelength: 1270nm to 1610nm
Max. Input Power: 0dBm
Output Wavelengths:
Standard: 1310nm, 1550nm (nominal)
CWDM: 1270nm to 1610nm (ITU-T G.694.2 compliant)
DWDM: C-Band (ITU-T G.694.1 compliant)
Output Power: See Application Configuration Chart

General Purpose Outputs (GPO):
Number of Signals: 2 Outputs
Connector: Multi-pin removable terminal block
Output Type: Dry contact relay closure, normally open
Output Current (min): 100mA

General Purpose Inputs (GPI):
Number of Signals: 2 Inputs
Connector: Multi-pin removable terminal block
Type: Opto-isolated, Active low
GPI Input Voltage:
Safe Voltage Range: -20V to +10V
On Condition (max): < +2.5V(active low)
Off Condition (min): > +3.5V
GPI Input Current (min): 1mA
GPI Input Current (max): 10mA (internally limited)

Electrical:
Voltage(type): 12V DC (nominal frame voltage)
Power(max): 7707IT-3 (Non DWDM) = 7W
7707IT-3 (DWDM) = 9W
7707IT-8 (Non DWDM) = 18W
7707IT-8 (DWDM) = 20W

Physical:
7700 frame mounting:
Number of Slots: 2
7701 frame mounting:
Number of Slots: 1

Compliance:
Electrical Safety: CSA Listed to UL 60065-03, IEC 60065
Complies with CE Low voltage Directive
Laser Safety: Class 1 laser product
Complies with 24 CFR 1040.10 and 1040.11
IEC 60825-1
EMI/RFI: Complies with FCC Part 15, Class A
EU EMC directive

Ordering Information

7707IT13M-3-W	3 Channel Intercom Fiber Transceiver, single fiber, WDM, 1310nm FP TX, RX on 1550nm
7707IT15-3-W	3 Channel Intercom Fiber Transceiver, single fiber, WDM, 1550nm DFB TX, RX on 1310nm
7707IT13-3-F2	3 Channel Intercom Fiber Transceiver, dual fiber, 1310nm FP TX & RX
7707IT13M-8-W	8 Channel Intercom Fiber Transceiver, single fiber, WDM, 1310nm FP TX, RX on 1550nm
7707IT15-8-W	8 Channel Intercom Fiber Transceiver, single fiber, WDM, 1550nm DFB TX, RX on 1310nm
7707IT13-8-F2	8 Channel Intercom Fiber Transceiver, dual fiber, 1310nm FP TX & RX

For CWDM, please refer to the end of the fiber section for ordering information

7707ITxx-3-F2	3 Channel Intercom Fiber Transceiver, dual fiber, CWDM TX, VistaLINK®
7707ITxx-8-F2	8 Channel Intercom Fiber Transceiver, dual fiber, CWDM TX, VistaLINK®

For DWDM, please refer to the end of the fiber section for ordering information

7707ITDxxx-3-F2	3 Channel Intercom Fiber Transceiver, dual fiber, DWDM TX, VistaLINK®
7707ITDxxx-8-F2	8 Channel Intercom Fiber Transceiver, dual fiber, DWDM TX, VistaLINK®

Ordering Options Rear Plate and Fiber Connector must be specified at time of order
Eg. Model +3RU +SC

Rear Plate Suffix

+3RU	3RU Rear Plate for use with 7700FR-C Multiframe
+1RU	1RU Rear Plate for use with 7701FR Multiframe
+SA	Standalone enclosure rear plate

Connector Suffix

+SC	SC/PC
+ST	ST/PC
+FC	FC/PC

Enclosures

7700FR-C	3RU Multiframe, which holds up to 15 single slot modules
7701FR	1RU Multiframe, which holds up to 3 single or dual slot modules
S7701FR	Standalone enclosure

7707DT & 7707DT-GPIO

Multi RS-232 / 422 / 485 / GPIO Fiber Data Transmitter

The 7707DT series Fiber Data Transceivers provide an economical method of transmitting multiple bi-directional RS-232, RS-422, RS-485 data signals as well as Linear Time Code (LTC) over a single fiber optic link. The 7707DT-GPIO version provides additional RS232 and General Purpose Input/Outputs (GPIO). A pair of 7707DT Data Transceivers permits bi-directional data transmission over distances up to 100km, with minimum possible latency.

Single and dual fiber (-F2) optical interface configurations allow the user to choose the optimal function/price/performance to suit a particular application. The dual fiber configuration is compatible with CWDM/DWDM systems and is designed to transmit and receive over separate fibers. The optical output of the 7707DT is available in 1310nm, 1550nm, CWDM and DWDM wavelengths.

The 7707DT occupies a single card slot and can be housed in either a 1RU Multiframe that will hold up to 3 modules, a 3RU Multiframe that will hold up to 15 modules or a standalone enclosure which will hold 1 module. The 7707DT-GPIO occupies two card slots and can be housed in the same enclosures.

Features & Benefits

- 7707DT transports four RS-422 or RS-485, three RS-232, and one LTC
- 7707DT-GPIO version provides five additional RS-232 and eight General Purpose Input/Outputs (GPIO)
- Selectable termination and failsafe bias settings for RS-422/485 data inputs
- Selectable network timeouts for RS-485 accommodates twelve data rates
- All configuration settings are controllable through the card-edge user interface, or VistaLINK®
- Optical output wavelengths of 1310nm, 1550nm, and up to sixteen CWDM wavelengths (ITU-T G.694.2 compliant)
- DWDM wavelengths also available (ITU-T G.694.1 compliant)
- Supports single-mode and multi-mode fiber optic cable
- SC/PC, ST/PC, or FC/PC* fiber connector options
- Fully hot-swappable from front of frame
- Comprehensive signal and card status monitoring via four digit card edge display or remotely through SNMP and VistaLINK®
- VistaLINK® capability is available when modules are used with the 3RU 7700FR-C frame and a 7700FC VistaLINK® Frame Controller module in slot 1 of the frame

7707DT Application Configurations

FIBER TYPE	FIBERS	OPTICAL/LINK BUDGET	TRANSMIT SIDE		RECEIVE SIDE		DESCRIPTION
			ORDERING PRODUCT INFO	TX POWER	ORDERING PRODUCT INFO	RX SENSITIVITY	
Multi-Mode	2	< 3km	**7707DT13-F2**	-7dBm	**7707DT13-F2**	-28dBm	1310nm on Tx & Rx fibers
Single-Mode	2	21dB/60km	**7707DT13-F2**	-7dBm	**7707DT13-F2**	-28dBm	1310nm on Tx & Rx fibers
Single-Mode	1 (WDM)	25dB/71km	**7707DT13M-W**	-1dBm	**7707DT15-W**	-26dBm	1310nm/1550nm, WDM, bi-directional on one fiber
Single-Mode	1 (CWDM)	24dB/96km**	**7707DTxx-F2**	0dBm	**7707DTyy-F2**	-28dBm	Different CWDM wavelengths on Tx & Rx, with 8 channel CWDM Mux/Demux**
Single-Mode	1 (DWDM)	30dB/120km***	**7707DTDxxx-F2**	+7dBm	**7707DTDyyy-F2**	-28dBm	Different DWDM wavelengths on Tx & Rx, with 8 channel DWDM Mux/Demux***

****Assumes 8 Ch CWDM Mux/Demux loss of 3.5dB**
*****Assumes 8 Ch DWDM Mux/Demux loss of 5dB**

Fiber loss= 0.35/0.25dB per km @ 1310nm/1550nm
Tx Power/Rx Sensitivity are nominal values ±1dBm

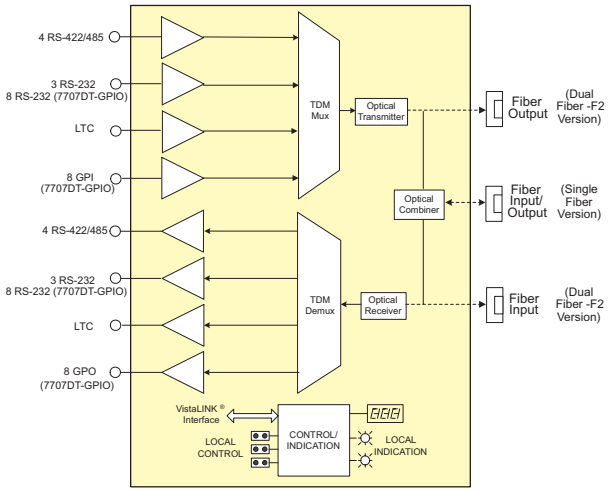

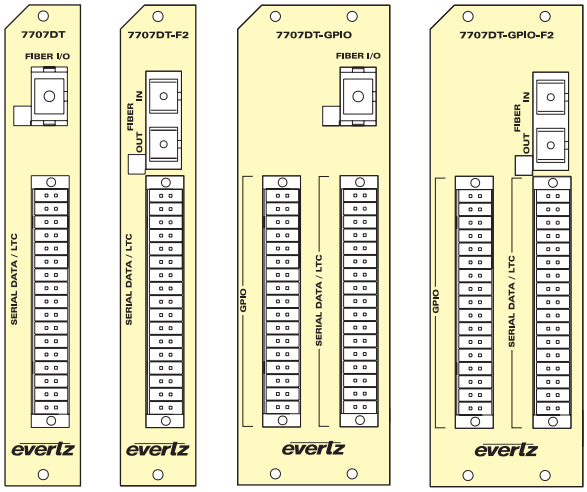

Specifications

RS-422/485 Serial Data:
Number of Signals: 4 Inputs/Outputs
Connector: Multi-pin Removable Terminal Block
Signal Type: RS-485 or RS-422 (selectable)
Input Termination: 110Ω or Open (selectable)
Input Failsafe Bias: 200mV (3.3mA into 60Ω) or None (selectable)
Bit Rate (max):
RS-422: 460kb/s
RS-485: 1.2kb/s, 2.4kb/s, 4.8kb/s, 9.6kb/s, 19.2kb/s, 38.4kb/s, 57.6kb/s, 76.8kb/s, 115kb/s, 153kb/s, 230kb/s, or 460kb/s (selectable)

RS-232 Serial Data:
Number of Signals:
Standard Version: 3 Input/Outputs
GPIO Version: 8 Inputs/Outputs
Connector: Multi-pin Removable Terminal Block
Signal Type: RS-232
Bit Rate (max): 115kb/s

LTC Data:
Number of Signals: 1 Input/Output
Connector: Multi-pin Removable Terminal Block
Signal Type: SMPTE 12M Linear Time Code
Input Level: 0.2 to 4V p-p (balanced or unbalanced)
Rise/Fall Times: 40µs ±10µs
Output Level: 1V p-p nominal (balanced)

General Purpose Inputs (7707DT-GPIO ONLY):
Number of Signals: 8 Inputs
Connector: Multi-pin Removable Terminal Block
Type: Opto-isolated, Active low
Input Voltage:
Safe Voltage Range: -20V to +10V
Off Condition (min): +3.5V
On Condition (max): +2.5V (active low)
Input Current (min): 1mA
Input Current (max): 10mA (internally limited)

General Purpose Outputs (7707DT-GPIO ONLY):
Number of Signals: 8 Outputs
Connector: Multi-pin Removable Terminal Block
Output Type: Dry contact relay closure, normally open
Output Current (min): 100mA

Optical Input/Output:
Connector:
Single fiber version: 1 Bi-directional optical connector: SC/PC, ST/PC or FC/PC* female housing
Dual fiber (F2) version: 2 optical connector: SC/PC or ST/PC female housing
Maximum Input Power:
Single fiber versions: 0dBm
Dual fiber (F2) versions: 0dBm
Input Optical Sensitivity: See Application Configuration Chart

Output Wavelengths: See Application Configuration Chart
Output Power: See Application Configuration Chart

Electrical:
Voltage: 12V DC
Power (max): 6W (Non DWDM), 8W (DWDM)
EMI/RFI: Complies with FCC Part 15, Class A
EU EMC Directive

Physical:
7700 frame mounting:
Number of Slots:
7707DT: 1
7707DT-GPIO: 2

7701 frame mounting:
Number of Slots:
7707DT: 1
7707DT-GPIO: 1

Compliance:
Electrical Safety: CSA Listed to UL 60065-03, IEC 60065
Complies with CE Low voltage Directive
Laser Safety: Class 1 laser product
Complies with 24 CFR 1040.10 and 1040.11
IEC 60825-1
EMI/RFI: Complies with FCC Part 15, Class A
EU EMC directive

Ordering Information

7707DT13M-W Multi RS232/422 Fiber Data Transceiver, single fiber, WDM, 1310nm FP TX, RX on 1550nm, VistaLINK®
7707DT13M-W-GPIO Multi RS232/422 and GPIO Fiber Data Transceiver, single fiber, WDM, 1310nm FP TX, RX on 1550nm, VistaLINK®
7707DT15-W Multi RS232/422 Fiber Data Transceiver, single fiber, WDM, 1550nm DFB TX, RX on 1310nm, VistaLINK®
7707DT15-W-GPIO Multi RS232/422 and GPIO Fiber Data Transceiver, single fiber, WDM, 1550nm DFB TX, RX on 1310nm, VistaLINK®
7707DT13-F2 Multi RS232/422 Fiber Data Transceiver, dual fiber, 1310nm FP TX & RX, VistaLINK®
7707DT13-F2-GPIO Multi RS232/422 and GPIO Fiber Data Transceiver, dual fiber, 1310nm FP TX & RX, VistaLINK®

For CWDM, please refer to the end of the fiber section for ordering information
7707DT-xx-F2 Multi RS232/422 Fiber Data Transceiver, dual fiber, CWDM TX
7707DT-xx-F2-GPIO Multi RS232/422 and GPIO Fiber Data Transceiver, dual fiber, CWDM TX

For DWDM, please refer to the end of the fiber section for ordering information
7707DTDxxx-F2 Multi RS232/422 Fiber Data Transceiver, dual fiber, DWDM TX
7707DTDxxx-F2-GPIO
Multi RS232/422 and GPIO Fiber Data Transceiver, dual fiber, DWDM TX

Ordering Options Rear Plate and Fiber Connector must be specified at time of order
Eg: Model +SC +3RU

Rear Plate Suffix
+3RU 3RU Rear Plate for use with 7700FR-C Multiframe
+1RU 1RU Rear Plate for use with 7701FR Multiframe
+SA Standalone Enclosure Rear Plate

Connector Suffix
+SC SC/PC
+ST ST/PC
+FC FC/PC*

**Note: FC/PC is only available on single fiber version*

Enclosures
7700FR-C 3RU Multiframe which holds up to 15 single slot modules
7701FR 1RU Multiframe which holds up to 3 single or dual slot modules
S7701FR Standalone enclosure

7707ET

Ethernet Fiber Transceiver

The 7707ET is a VistaLINK® capable Ethernet Fiber Transceiver that provides an economical method of transmitting two 10BaseT Ethernet channels or one 100Base-TX Ethernet channel over optical fiber. The transceiver is IEEE 802.3 10BASE-T and IEEE 802.3u 100BASE-TX compliant. It mediates between a 10/100BASE-TX segment and supports both full duplex and half-duplex operation. Monitoring of card status and parameters is provided locally at the card edge and remotely via VistaLINK®. A pair of 7707ET transceivers permits full duplex communication over single or dual optical fibers. Diagnostic LEDs provide indication of power, link status and data reception.

Multiple versions of the 7707ET are available to address single-mode/multi-mode fiber, single/dual fiber and CWDM/DWDM applications (See Applications Configuration Chart).

The 7707ET occupies one card slot and can be housed in either a 1RU Frame that will hold up to 3 modules, a 3RU Frame that will hold up to 15 modules or a standalone enclosure that will hold 1 module.

Features & Benefits

- 2 (10 Base T) Ethernet channels or 1 (100 Base TX) Ethernet channel
- Auto negotiation for 10/100 speed and half/full duplex modes
- Comprehensive signal and card status monitoring via four digit card edge display or remotely through SNMP and VistaLINK®
- VistaLINK® capability is available when modules are used with the 3RU 7700FR-C frame and a 7700FC VistaLINK® Frame Controller module in slot 1 of the frame
- Local display of optical signal strength, link parameters and link status
- Optical output available in 1310nm, 1550nm and up to sixteen CWDM wavelengths (ITU-T G.694.2 compliant)
- DWDM wavelengths (ITU-T G.694.1 compliant) also available
- Supports single-mode and multi-mode fiber optic cable
- Fully hot-swappable from front of frame with no fiber or Ethernet channel disconnect required
- SC/PC, ST/PC or FC/PC connector options

Status Indicators

- Frame Status
- 10/100 speed indication for all copper ports
- Full duplex/Collision Indication for all copper ports
- Link activity for copper port
- Received optical power level
- Fiber link indication

7707ET Application Configurations

FIBER TYPE	FIBERS	OPTICAL/LINK BUDGET	TRANSMIT SIDE		RECEIVE SIDE		DESCRIPTION
			ORDERING PRODUCT INFO	TX POWER	ORDERING PRODUCT INFO	RX SENSITIVITY	
Multi-Mode	2	< 3km	7707ET13-F2	-7dBm	7707ET13-F2	-32dBm	1310nm on Tx & Rx fibers
Single-Mode	2	25dB/71km	7707ET13-F2	-7dBm	7707ET13-F2	-32dBm	1310nm on Tx & Rx fibers
Single-Mode	1 (WDM)	25dB/71km	7707ET13M-W	-1dBm	7707ET15-W	-26dBm	1310nm/1550nm, WDM, bi-directional on one fiber
Single-Mode	1 (CWDM)	28dB/112km**	7707ETxx-F2	0dBm	7707ETyy-F2	-32dBm	Different CWDM wavelengths for Tx & Rx, with 8 channel CWDM Mux/Demux**
Single-Mode	1 (DWDM)	34dB/136km***	7707ETDxxx-F2	+7dBm	7707ETDyyy-F2	-32dBm	Different DWDM wavelengths for Tx & Rx, with 8 channel DWDM Mux/Demux***

**Assumes 8 Ch CWDM Mux/Demux loss of 3.5dB
***Assumes 8 Ch DWDM Mux/Demux loss of 5dB

Fiber loss= 0.35/0.25dB per km @ 1310nm/1550nm

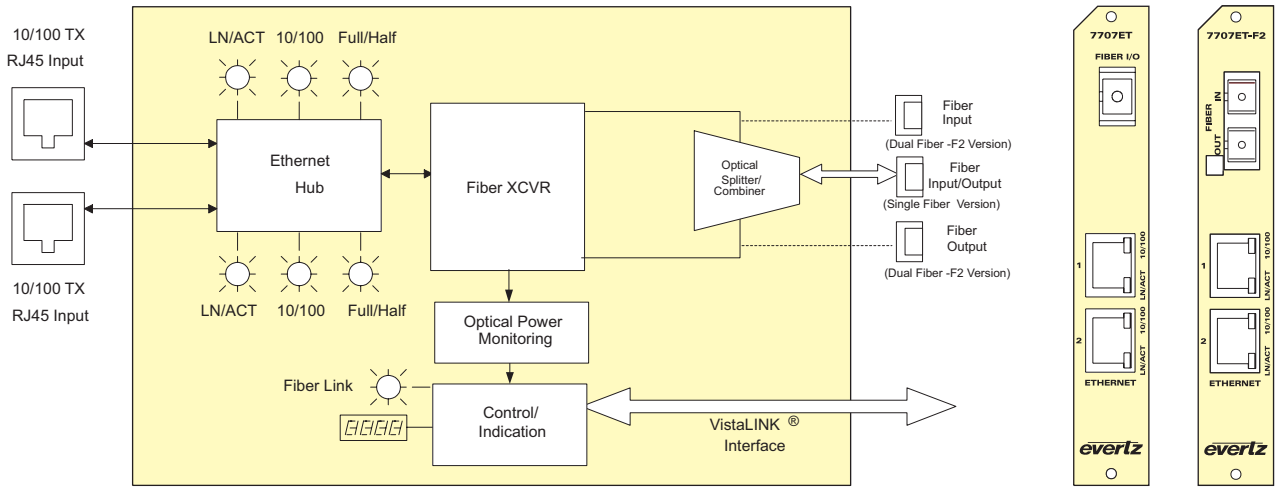

Specifications

Ethernet Input/Output:
Standard : IEEE 802.3 (10 BaseT), IEEE 802.3u (100 BaseTX)
Connector: Two RJ45s
Number of channels: 2 (10Base-T) or 1 (100BaseTX)
Cable Requirements:
10 BaseT : UTP category 3,4 or 5 cable up to 328ft/100m (2 pairs)
100 BaseTX : UTP category 5 cable up to 328 ft/100m (2 pairs)

Optical Input/Output:
Connector:
Single Fiber Versions:
1 Female SC/PC, ST/PC or FC/PC
Dual Fiber (F2) Versions:
2 Female SC/PC, ST/PC or FC/PC
Input wavelengths: 1270nm-1610nm
Max. Input Power: 0dBm
Input Optical Sensitivity:
See Application Configuration Chart
Output Wavelengths: See Ordering Information
Output Power: See Application Configuration Chart

Electrical:
Voltage: 12V
Power: 6W (Non DWDM)
8W (DWDM)

Physical:
Number of slots: 1

Compliance:
Electrical Safety: CSA Listed to UL 60065-03, IEC 60065
Complies with CE Low voltage Directive
Laser Safety: Class 1 laser product
Complies with 24 CFR 1040.10 and 1040.11
IEC 60825-1
EMI/RFI: Complies with FCC Part 15, Class A
EU EMC Directive

Ordering Information

7707ET13M-W Ethernet Fiber Transceiver - Single Fiber, WDM, 1310nm, FP TX, RX on 1550nm, VistaLINK® Monitoring
7707ET15-W Ethernet Fiber Transceiver, single fiber, WDM, 1550nm DFB TX, RX on 1310nm, VistaLINK®
7707ET13-F2 Ethernet Fiber Transceiver - Dual Fiber, 1310nm, FP Laser, VistaLINK® Monitoring

For CWDM, please refer to the end of the fiber section for ordering information
7707ETxx-F2 Ethernet Fiber Transceiver - Dual Fiber, CWDM, DFB Laser, VistaLINK® Monitoring

For DWDM, please refer to the end of the fiber section for ordering information
7707ETDxxx-F2 Ethernet Fiber Transceiver, dual fiber, DWDM TX, VistaLINK®

Ordering Options Rear Plate and Fiber Connector must be specified at time of order
Eg: Model +SC +3RU

Rear Plate Suffix
+3RU 3RU Rear Plate for use with 7700FR-C Multiframe
+1RU 1RU Rear Plate for use with 7701FR Multiframe
+SA Standalone Enclosure Rear Plate

Connector Suffix
+SC SC/PC
+ST ST/PC
+FC FC/PC

Enclosures
7700FR-C 3RU Multiframe which holds up to 15 single slot modules
7701FR 1RU Multiframe which holds up to 3 single or dual slot modules
S7701FR Standalone enclosure

7707ET-TE1

Ethernet & T1/E1/J1 Fiber Transceiver

The 7707ET-TE1 is a VistaLINK® capable Ethernet and T1/E1/J1 Fiber Transceiver that provides an economical method of transmitting one 10/100BaseT Ethernet signal and one T1/E1/J1 signal over optical fiber. Monitoring control of card status and parameters is provided locally at the card edge and remotely via VistaLINK®. A pair of 7707ET-TE1 transceivers permits full duplex communication of all signals over single or dual optical fibers.

The 7707ET-TE1 provides one RJ45 input connector for the 10/100BaseT Ethernet, one RJ45 input connector for the T1/E1/J1 and one or two fiber optic output connectors. Multiple versions of the 7707ET-TE1 are available to address single-mode/multi-mode fiber, single/dual fiber and CWDM/DWDM applications (See Applications Configuration Chart below).

The 7707ET-TE1 occupies one card slot and can be housed in either a 1RU frame that will hold up to 3 modules, a 3RU frame that will hold up to 15 modules or a standalone enclosure that will hold 1 module.

Features & Benefits

- 10/100BaseT Ethernet and T1/E1/J1 fiber optic transceiver
- Auto negotiation for 10/100 speeds and full/half duplex operation on Ethernet port
- G.703 compliant T1/E1/J1 port
- Ethernet and T1/E1/J1 signals completely independent over transport interface
- Built-in Ethernet switch for isolation of each transmission end
- Comprehensive signal and card status monitoring via four digit card edge display or remotely through SNMP and VistaLINK®
- VistaLINK® capability is available when modules are used with the 3RU 7700FR-C frame and a 7700FC VistaLINK® Frame Controller module in slot 1 of the frame
- Local display of optical signal strength, link parameters and link status
- Optical output available in 1310nm, 1550nm and up to sixteen CWDM wavelengths (ITU-T G.694.2 compliant)
- DWDM wavelengths (ITU-T G.694.1 compliant) also available
- Supports single-mode and multi-mode fiber optic cable
- Fully hot-swappable from front of frame
- SC/PC, ST/PC or FC/PC connector options

Status Indication

- Frame status
- Fiber link indication
- 10/100 Speed indication
- Ethernet Full Duplex/Collision indication
- Ethernet Link activity
- T1/E1/J1 Signal Presence
- T1/E1/J1 Indication
- Optical Power Level

7707ET-TE1 Application Configurations

FIBER TYPE	FIBERS	OPTICAL/LINK BUDGET	TRANSMIT SIDE		RECEIVE SIDE		DESCRIPTION
			ORDERING PRODUCT INFO	TX POWER	ORDERING PRODUCT INFO	RX SENSITIVITY	
Multi-Mode	2	< 3km	7707ET13-TE1-F2	-7dBm	7707ET13-TE1-F2	-28dBm	1310nm on Tx & Rx fibers
Single-Mode	2	21dB/60km	7707ET13-TE1-F2	-7dBm	7707ET13-TE1-F2	-28dBm	1310nm on Tx & Rx fibers
Single-Mode	1 (WDM)	25dB/71km	7707ET13M-TE1-W	-1dBm	7707ET15-TE1-W	-26dBm	1310nm/1550nm, WDM, bi-directional on one fiber
Single-Mode	1 (CWDM)	24dB/96km**	7707ETxx-TE1-F2	0dBm	7707ETyy-TE1-F2	-28dBm	Different CWDM wavelengths for Tx & Rx, with 8 channel CWDM Mux/Demux**
Single-Mode	1 (DWDM)	30dB/120km***	7707ETDxxx-TE1-F2	+7dBm	7707ETDyyy-TE1-F2	-28dBm	Different DWDM wavelengths for Tx & Rx, with 8 channel DWDM Mux/Demux***

**Assumes 8 Ch CWDM Mux/Demux loss of 3.5dB
***Assumes 8 Ch DWDM Mux/Demux loss of 5dB

Fiber loss= 0.35/0.25dB per km @ 1310nm/1550nm

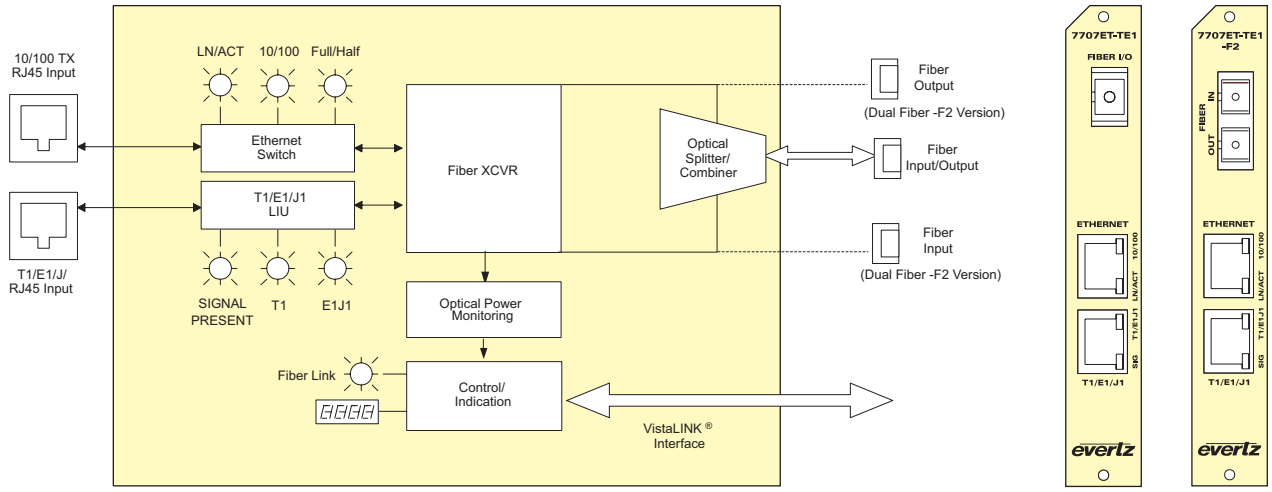

Specifications

Ethernet Input/Output:
Standard : IEEE 802.3 (10 BaseT), IEEE 802.3u (100 BaseTX)
Connector: 1 RJ45
Cable Requirements:
10 BaseT: UTP category 3,4 or 5 cable up to 328ft/100m (2 pairs)
100 BaseTX: UTP category 5 cable up to 328ft/100m (2 pairs)

T1/E1/J1 Input/Output:
Standard: G.703
Connector: 1 RJ45
Cable Requirements:
0.63mm (22 AWG) cable up to 1000m

Optical Input/Output:
Connector:
Single Fiber versions:
1 Female SC/PC, ST/PC or FC/PC
Dual Fiber (F2) versions:
2 Female SC/PC, ST/PC or FC/PC
Max. Input Power: 0dBm
Input Wavelength: 1270nm-1610nm
Input Optical Sensitivity:
See Application Configuration Chart
Output Wavelengths: See Ordering Information
Output Power: See Application Configuration Chart

Electrical:
Voltage: 12V
Power: 6W (Non DWDM)
8W (DWDM)

Physical:
Number of slots: 1

Compliance:
Electrical Safety: CSA Listed to UL 60065-03, IEC 60065
Complies with CE Low voltage Directive
Laser Safety: Class 1 laser product
Complies with 24 CFR 1040.10 and 1040.11
IEC 60825-1
EMI/RFI: Complies with FCC Part 15, Class A
EU EMC Directive

Ordering Information

7707ET13M-TE1-W Ethernet & T1/E1/J1 Fiber Transceiver, single fiber, WDM, 1310nm FP TX, RX on 1550nm, VistaLINK®
7707ET15-TE1-W Ethernet & T1/E1/J1 Fiber Transceiver, single fiber, WDM, 1550nm DFB TX, RX on 1310nm, VistaLINK®
7707ET13-TE1-F2 Ethernet and TI/EI/J1 Fiber Transceiver, Dual Fiber, 1310 nm, FP Laser, VistaLINK®

For CWDM, please refer to the end of the fiber section for ordering information
7707ETxx-TE1-F2 Ethernet and TI/EI/J1 Fiber Transceiver, Dual Fiber, CWDM, DFB Laser, VistaLINK®

For DWDM, please refer to the end of the fiber section for ordering information
7707ETDxxx-TE1-F2 Ethernet & T1/E1/J1 Fiber Transceiver, dual fiber, DWDM TX, VistaLINK®

Ordering Options Rear Plate and Fiber Connector must be specified at time of order
Eg: Model +SC +3RU

Rear Plate Suffix
+3RU 3RU Rear Plate for use with 7700FR-C Multiframe
+1RU 1RU Rear Plate for use with 7701FR Multiframe
+SA Standalone Enclosure Rear Plate

Connector Suffix
+SC SC/PC
+ST ST/PC
+FC FC/PC

Enclosures
7700FR-C 3RU Multiframe which holds up to 15 single slot modules
7701FR 1RU Multiframe which holds up to 3 single or dual slot modules
S7701FR Standalone enclosure

7707ET-4

Quad Ethernet Fiber Transceiver

The 7707ET-4 is a VistaLINK® capable Quad Ethernet Fiber Transceiver that transmits up to four separate 10/100BaseT Ethernet channels over optical fiber. Monitoring of card status and parameters is provided locally at the card edge and remotely via VistaLINK®. A pair of 7707ET-4 transceivers permit full duplex communication of all four channels over a single or dual optical fiber(s).

The 7707ET-4 provides four RJ45 input connectors and either one or two fiber optic output connectors. Multiple versions of the 7707ET-4 are available to address single-mode/multi-mode fiber, single/dual fiber and CWDM/DWDM applications (See Application Configuration chart below).

The 7707ET-4 occupies one or two card slots and can be housed in a 1RU frame that will hold up to 3 modules, a 3RU frame that will hold up to 7 dual slot modules or 15 single slot modules or a standalone enclosure which will hold 1 module.

Features & Benefits

- Four completely independent and isolated Ethernet streams
- Auto negotiation for 10/100 speeds on all ports
- Built-in Ethernet switches for isolation of each transmission end
- Comprehensive signal and card status monitoring via four digit card edge display or remotely through SNMP and VistaLINK®
- VistaLINK® capability is available when modules are used with the 3RU 7700FR-C frame and a 7700FC VistaLINK® Frame Controller module in slot 1 of the frame
- Optical output wavelengths at 1310nm, 1550nm and up to sixteen CWDM wavelengths (ITU-T G.694.2 compliant)
- DWDM wavelengths (ITU-T G.694.1 compliant) also available
- Fully hot-swappable from front of frame
- SC/PC, ST/PC, FC/PC Connector options

Status Indication

- Frame status
- 10/100 Speed indication on copper ports
- Full Duplex/Collision indication on copper ports
- Link activity on copper ports
- Received optical power level

7707ET-4 Application Configurations

FIBER TYPE	FIBERS	OPTICAL/LINK BUDGET	TRANSMIT SIDE		RECEIVE SIDE		DESCRIPTION
			ORDERING PRODUCT INFO	TX POWER	ORDERING PRODUCT INFO	RX SENSITIVITY	
Multi-Mode	2	< 2km	7707ET13-4-F2	-7dBm	7707ET13-4-F2	-23dBm	1310nm on Tx & Rx fibers
Single-Mode	2	16dB/45km	7707ET13-4-F2	-7dBm	7707ET13-4-F2	-23dBm	1310nm on Tx & Rx fibers
Single-Mode	1 (WDM)	20dB/57km	7707ET13M-4-W	-1dBm	7707ET15-4-W	-21dBm	1310nm/1550nm, WDM, bi-directional on one fiber
Single-Mode	1 (CWDM)	19dB/76km**	7707ETxx-4-F2	0dBm	7707ETyy-4-F2	-23dBm	Different CWDM wavelengths for Tx & Rx, with 8 channel CWDM Mux/Demux**
Single-Mode	1 (CWDM)	28dB/112km**	7707ETxx-4-F2-H	0dBm	7707ETyy-4-F2-H	-32dBm	Different CWDM wavelengths for Tx & Rx, with 8 channel CWDM Mux/Demux with high sensitivity receiver**
Single-Mode	1 (DWDM)	25dB/100km***	7707ETDxxx-4-F2	+7dBm	7707ETDyyy-4-F2	-23dBm	Different DWDM wavelengths on Tx & Rx, with 8 channel DWDM Mux/Demux***
Single-Mode	1 (DWDM)	34dB/136km***	7707ETDxxx-4-F2-H	+7dBm	7707ETDyyy-4-F2-H	-32dBm	Different DWDM wavelengths for Tx & Rx, with 8 channel DWDM Mux/Demux with high sensitivity receiver***

**Assumes 8 Ch CWDM Mux/Demux loss of 3.5dB
***Assumes 8 Ch DWDM Mux/Demux loss of 5dB

Fiber loss= 0.35/0.25dB per km @ 1310nm/1550nm

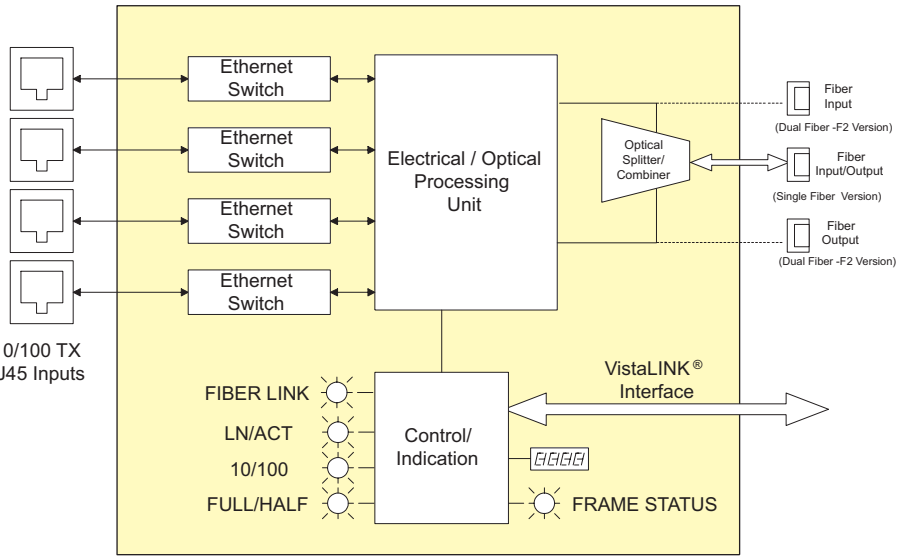

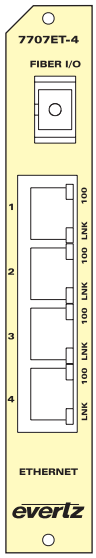

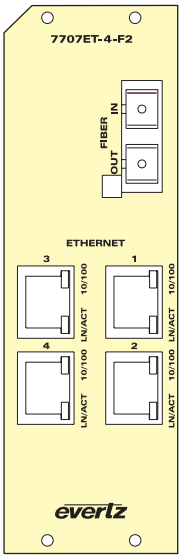

Specifications

Ethernet Input/Output:
Standard: IEEE 802.3 10BASE-T
802.3u 100BASE-TX
Connectors: 4 RJ45 ports
Cable Requirements:
10Base-T: UTP category 3, 4, or 5 cable up to 328ft/100m
100Base-T: UTP category 5 cable up to 328ft/100m

Optical Input/Output:
Connector:
Single Fiber Version:
1 Female SC/PC, ST/PC, FC/PC
Dual Fiber Version:
2 Female SC/PC, ST/PC, FC/PC
Input Wavelengths: 1270nm to 1610nm
Rise & Fall Time: 200ps nominal
Wide Band Jitter: < 0.2 UI
Maximum Input Power:
Standard: -1dBm
F2-H Versions: -8dBm
Input Optical Sensitivity:
See Application Configuration Chart
Output Wavelengths:
See Ordering Information
Output Power:
See Application Configuration Chart

Electrical:
Voltage: +12V DC
Power: 12W (Non DWDM)
14W (DWDM)
EMI/RFI: Complies with FCC Part 15, Class A
EU EMC Directive

Physical:
Number of slots:
Single Fiber: 1
Dual Fiber: 2

Compliance:
Electrical Safety: CSA Listed to UL 60065-03, IEC 60065
Complies with CE Low voltage Directive
Laser Safety: Class 1 laser product
Complies with 24 CFR 1040.10 and 1040.11
IEC 60825-1

Ordering Information

7707ET13M-4-W Quad Ethernet Fiber Transceiver, single fiber, WDM, 1310nm FP TX, RX on 1550nm
7707ET15-4-W Quad Ethernet Fiber Transceiver, single fiber, WDM, 1550nm DFB TX, RX on 1310nm
7707ET13-4-F2 Quad Ethernet Fiber Transceiver, dual fiber, 1310nm FP TX & RX

For CWDM, please refer to the end of the fiber section for ordering information

7707ETxx-4-F2 Quad Ethernet Fiber Transceiver, dual fiber, CWDM TX
7707ETxx-4-F2-H Quad Ethernet Fiber Transceiver, dual fiber, CWDM TX, High Sensitivity RX

For DWDM, please refer to the end of the fiber section for ordering information
7707ETDxxx-4-HD-F2
Quad Ethernet Fiber Transceiver, dual fiber, DWDM TX
7707ETDxxx-4-HD-F2-H
Quad Ethernet Fiber Transceiver, dual fiber, DWDM TX, High Sensitivity RX

Ordering Options Rear Plate and Fiber Connector must be specified at time of order
Eg. Model +3RU +SC

Rear Plate Suffix
+3RU 3RU Rear Plate for use with 7700FR-C Multiframe
+1RU 1RU Rear Plate for use with 7701FR Multiframe
+SA Standalone Enclosure Rear Plate

Connector Suffix
+SC SC/PC
+ST ST/PC
+FC FC/PC

Enclosures
7700FR-C 3RU Multiframe, which holds up to 15 single slot modules
7701FR 1RU Multiframe, which holds up to 3 single or dual slot modules
S7701FR Standalone enclosure

7707GT

Quad Ethernet Fiber Transceiver

The 7707GT is a VistaLINK® - capable Gigabit Ethernet Fiber Transceiver that provides an economical method of transmitting one 10/100/1000BaseT Ethernet channel over optical fiber. The transceiver is IEEE 802.3 10BASE-T, IEEE 802.3u 100BASE-TX and IEEE 802.3ab 1000BASE-TX compliant and provides auto negotiation between a 10/100/1000BASE-TX segment. Monitoring of card status and parameters is provided locally at the card edge and remotely via VistaLINK®. A pair of 7707GT transceivers permits full duplex communication over single or dual optical fibers. Diagnostic LEDs provide indication of power, linkage and data reception.

Multiple versions of the 7707GT are available to address single-mode/multi-mode fiber, single/dual fiber and CWDM/DWDM applications (See Application Configuration chart below).

The 7707GT occupies one card slot and can be housed in either a 1RU frame that will hold up to 3 modules, a 3RU frame that will hold up to 15 modules or a standalone enclosure which will hold 1 module.

Features & Benefits

- Auto negotiation for 10/100/1000 speeds and half/full duplex modes
- Auto equalization for up to 100m at Gigabit ethernet rates
- Comprehensive signal and card status monitoring via four digit card edge display or remotely through SNMP and VistaLINK®
- VistaLINK® capability is available when modules are used with the 3RU 7700FR-C frame and a 7700FC VistaLINK® Frame Controller module in slot 1 of the frame
- Local display of optical signal strength and link status
- Optical output available in 1310nm, 1550nm and up to sixteen CWDM wavelengths (ITU-T G.694.2 compliant)
- DWDM wavelengths (ITU-T G.694.1 compliant) also available
- Supports single-mode and multi-mode fiber optic cable
- Fully hot-swappable from front of frame
- SC/PC, ST/PC or FC/PC connector options

Status Indication
- Frame status
- Copper Interface Status
- 10/100/1000 Speed Indication
- Fiber Link Status
- Optical Power Level

7707GT Application Configurations

FIBER TYPE	FIBERS	OPTICAL/LINK BUDGET	TRANSMIT SIDE		RECEIVE SIDE		DESCRIPTION
			ORDERING PRODUCT INFO	TX POWER	ORDERING PRODUCT INFO	RX SENSITIVITY	
Multi-Mode	2	< 1km	7707GT13-F2	-7dBm	7707GT13-F2	-23dBm	1310nm on Tx & Rx fibers
Single-Mode	2	16dB/45km	7707GT13-F2	-7dBm	7707GT13-F2	-23dBm	1310nm on Tx & Rx fibers
Single-Mode	1 (WDM)	20dB/57km	7707GT13M-W	-1dBm	7707GT15-W	-21dBm	1310nm/1550nm, WDM, bi-directional on one fiber
Single-Mode	1 (CWDM)	19dB/76km**	7707GTxx-F2	0dBm	7707GTyy-F2	-23dBm	Different CWDM wavelengths on Tx & Rx, with 8 channel CWDM Mux/Demux**
Single-Mode	1 (CWDM)	28dB/112km**	7707GTxx-F2-H	0dBm	7707GTyy-F2-H	-32dBm	Different CWDM wavelengths on Tx & Rx, with 8 channel CWDM Mux/Demux, High Sensitivity Receiver**
Single-Mode	1 (DWDM)	25dB/100km***	7707GTDxxx-F2	+7dBm	7707GTDyyy-F2	-21dBm	Different DWDM wavelengths on Tx & Rx, with 8 channel DWDM Mux/Demux***
Single-Mode	1 (DWDM)	34dB/136km***	7707GTDxxx-F2-H	+7dBm	7707GTDyyy-F2-H	-32dBm	Different DWDM wavelengths on Tx & Rx, with 8 channel DWDM Mux/Demux, High Sensitivity Receiver***

**Assumes 8 Ch CWDM Mux/Demux loss of 3.5dB
***Assumes 8 Ch DWDM Mux/Demux loss of 5dB

Fiber loss= 0.35/0.25dB per km @ 1310nm/1550nm

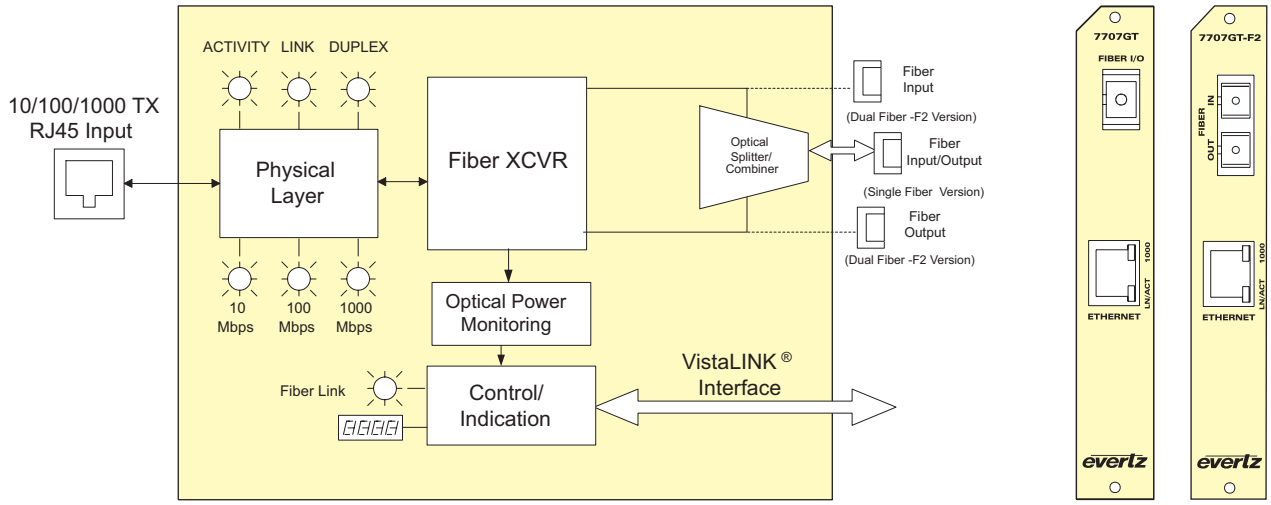

Specifications

Ethernet Input/Output:
Standard: IEEE 802.3 (10 BaseT), IEEE 802.3u (100 BaseTX), IEE 802.3ab (1000baseTX)
Connector: 1 RJ45
Cable Requirements:
10 BaseT: UTP category 3,4 or 5 cable up to 328ft/100m (2 pairs)
100 BaseTX: UTP category 5 cable up to 328ft/100m (2 pairs)
1000 BaseTX: UTP category 5 cable up to 328ft/100m (4 pairs)

Optical Input/Output:
Connector:
Single Fiber version: 1 female SC/PC, ST/PC or FC/PC
Dual Fiber (F2) version: 2 female SC/PC, ST/PC or FC/PC

Input Wavelengths: 1270nm-1610nm
Maximum Input Power:
Standard: -1dBm
-H versions: -8dBm
Input Optical Sensitivity: See Application Configuration Chart
Output Wavelengths: See Ordering Information
Output Power: See Application Configuration Chart

Electrical:
Voltage: 12V
Power: 8W (Non DWDM)
10W (DWDM)

Physical:
Number of slots: 1

Compliance:
Electrical Safety: CSA Listed to UL 60065-03, IEC 60065
Complies with CE Low voltage Directive
Laser Safety: Class 1 laser product
Complies with 24 CFR 1040.10 and 1040.11
IEC 60825-1
EMI/RFI: Complies with FCC Part 15, Class A
EU EMC Directive

Ordering Information

7707GT13M-W Gigabit Ethernet Fiber Transceiver, single fiber, WDM, 1310nm DFB TX, RX on 1550nm, VistaLINK®
7707GT15-W Gigabit Ethernet Fiber Transceiver, single fiber, WDM, 1550nm DFB TX, RX on 1310nm, VistaLINK®
7707GT13-F2 Gigabit Ethernet Fiber Transceiver, dual fiber, 1310nm FP TX & RX, VistaLINK®

For CWDM, please refer to the end of the fiber section for ordering information
7707GTxx-F2 Gigabit Ethernet Fiber Transceiver, dual fiber, CWDM TX, VistaLINK®
7707GTxx-F2-H Gigabit Ethernet Fiber Transceiver, dual fiber, CWDM TX, High Sensitivity RX, VistaLINK®

For DWDM, please refer to the end of the fiber section for ordering information
7707GTDxxx-F2 Gigabit Ethernet Fiber Transceiver, dual fiber, DWDM TX, VistaLINK®
7707GTDxxx-F2-H Gigabit Ethernet Fiber Transceiver, dual fiber, DWDM TX, High Sensitivity RX, VistaLINK®

Ordering Options Rear Plate and Fiber Connector must be specified at time of order
Eg: Model +SC +3RU

Rear Plate Suffix
+3RU 3RU Rear Plate for use with 7700FR-C Multiframe
+1RU 1RU Rear Plate for use with 7701FR Multiframe
+SA Standalone Enclosure Rear Plate

Connector Suffix
+SC SC/PC
+ST ST/PC
+FC FC/PC

Enclosures
7700FR-C 3RU Multiframe which holds up to 15 single slot modules
7701FR 1RU Multiframe which holds up to 3 single or dual slot modules
S7701FR Standalone enclosure

7707GPS-DT

Dual GPS Data Fiber Transmitter

Features & Benefits

- Transports GPS data signals from two Trimble Accutime 2000 Smart Antennas simultaneously
- Allows user to run 1 or 2 Accutime 2000 GPS heads for primary and redundant links
- GPS power at +17V DC with built-in current limiting
- All configuration settings are controllable through the card-edge user interface, or VistaLINK®
- Optical output wavelength of 1310nm or 1550nm provides a 2km transmission distance of GPS data signal
- Low latency
- Comprehensive signal and card status monitoring via four digit card edge display or remotely through SNMP and VistaLINK®
- VistaLINK® capability is available when modules are used with the 3RU 7700FR-C frame and a 7700FC VistaLINK® Frame Controller module in slot 1 of the frame
- Compatible with multi-mode and single-mode fiber
- SC/PC, ST/PC, or FC/PC fiber connector options
- Fully hot-swappable from front of frame
- VistaLINK® enabled for remote monitoring and control when installed in 7700FR-C frame with 7700FC VistaLINK® Frame Controller

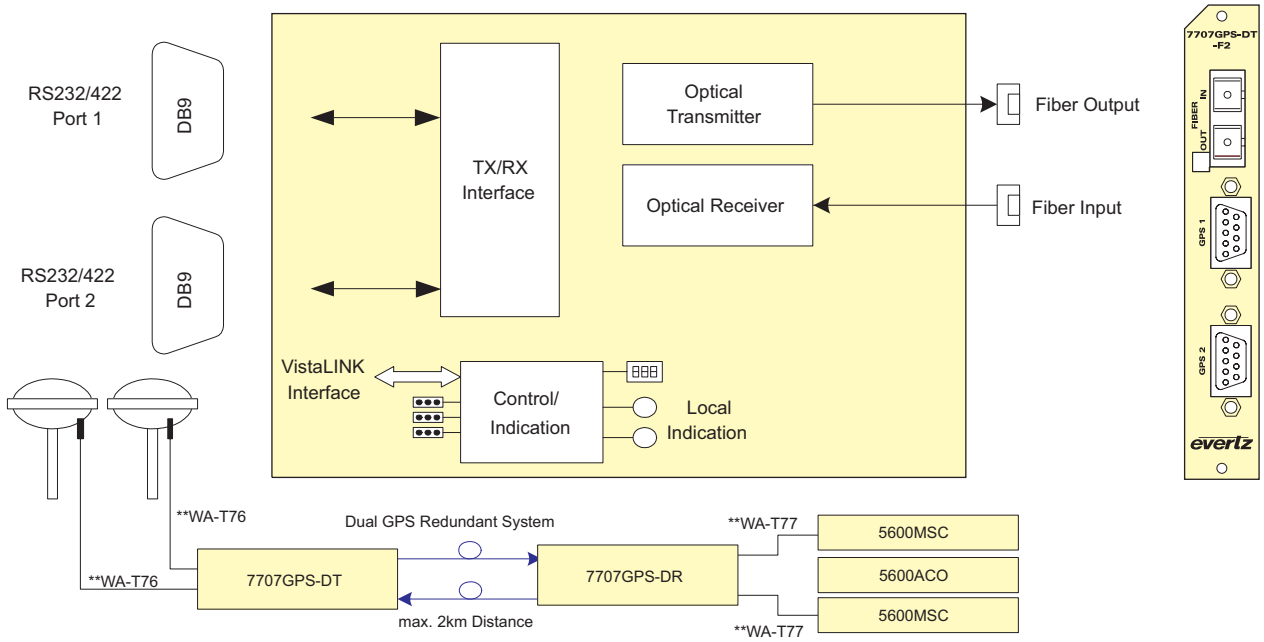

**Evertz recomends that only these cables be used for connecting the specified equipment to the 7707GPS-DT and 7707GPS-DR. See Accessories for ordering details.

Specifications

GPS Serial Data:
Number of Signals: 2 bi-directional GPS signals
Connector: 2xDB-9 connectors
Type: RS-232 or RS-422 (selectable)
Bit Rate RS-232/RS-422: 115kb/s,

Optical Input/Outputs:
Number of Connections: 2
Connector: Female SC/PC, ST/PC or FC/PC
Max. Input Power: 0dBm
Input Optical Sensitivity: -22dBm
Fiber Size and Type
Dual Fiber (F2): 9µm core/single mode on TX, 62.5µm core/multi-mode on RX
Output Wavelength: 1310nm,1550nm (nominal)

Output Power:
Dual Fiber (F2)
1310nm FP (Standard): -7dBm ±1dBm
1550nm DFB: 0dBm ±1dBm

Electrical:
Voltage: +12V DC
Power: 10W

GPS Power:
Voltage: +17V DC
Power: 7W
Current: 200mA

Connecting Cables (see Ordering Options):**
Number of cables 2

Physical (Number of Slots):
7700 Frame Mounting: 1
7701 Frame Mounting: 1

Compliance:
Electrical Safety: CSA Listed to UL 60065-03, IEC 60065
Complies with CE Low voltage Directive

Laser Safety: Class 1 laser product
Complies with 24 CFR 1040.10 and 1040.11
IEC 60825-1
EMI/RFI: Complies with FCC Part 15, Class A
EU EMC Directive

Ordering Information

7707GPS-DT13-F2	Dual GPS Data Fiber Transmitter, 1310nm FP Tx and Rx
7707GPS-DT15-F2	Dual GPS Data Fiber Transmitter, 1550nm DFB Tx and Rx

Ordering Options Rear Plate and Fiber Connector must be specified at time of order
Eg: Model +SC +3RU

Rear Plate Suffix
+3RU 3RU rear plate for use with 7700FR-C Multiframe
+1RU 1RU rear plate for use with 7701FR Multiframe
+SA Standalone Enclosure Rear Plate

Connector Suffix
+SC SC/PC
+ST ST/PC
+FC FC/PC

Accessories
WA-T76 100' IF cable for 5600MSC, GPSII and 7707GPS-DT
WA-T77 100' IF cable for 7707GPS-DR to 5600MSC

*Notes** ***Please specify the quantity of WA-T76 and WA-T77 cables required to connect the 7707GPS-DT and 7707GPS-DR to the Accutime Head and 5600MSC or 5010-GPSII respectively. The 7707GPS-DT and 7707GPS-DR are only compatible with the WA-T76 and WA-T77 cables. See diagram and Accessories for more information.*

Enclosures
7700FR-C 3RU Multiframe which holds up to 15 single slot modules
7701FR 1RU Multiframe which holds up to 3 single or dual slot modules
S7701FR Standalone Enclosure

Features & Benefits

- Transports GPS data signals from two Trimble Accutime 2000 Smart Antennas simultaneously
- Allows user to run 1 or 2 Accutime 2000 GPS heads for primary and redundant links
- All configuration settings are controllable through the card-edge user interface, or VistaLINK®
- Optical output wavelength of 1310nm or 1550nm provides a 2km transmission distance of GPS data signal
- Low latency
- Compatible with multi-mode and single-mode fiber
- SC/PC, ST/PC, or FC/PC fiber connector options
- Fully hot-swappable from front of frame
- Comprehensive signal and card status monitoring via four digit card edge display or remotely through SNMP and VistaLINK®
- VistaLINK® capability is available when modules are used with the 3RU 7700FR-C frame and a 7700FC VistaLINK® Frame Controller module in slot 1 of the frame

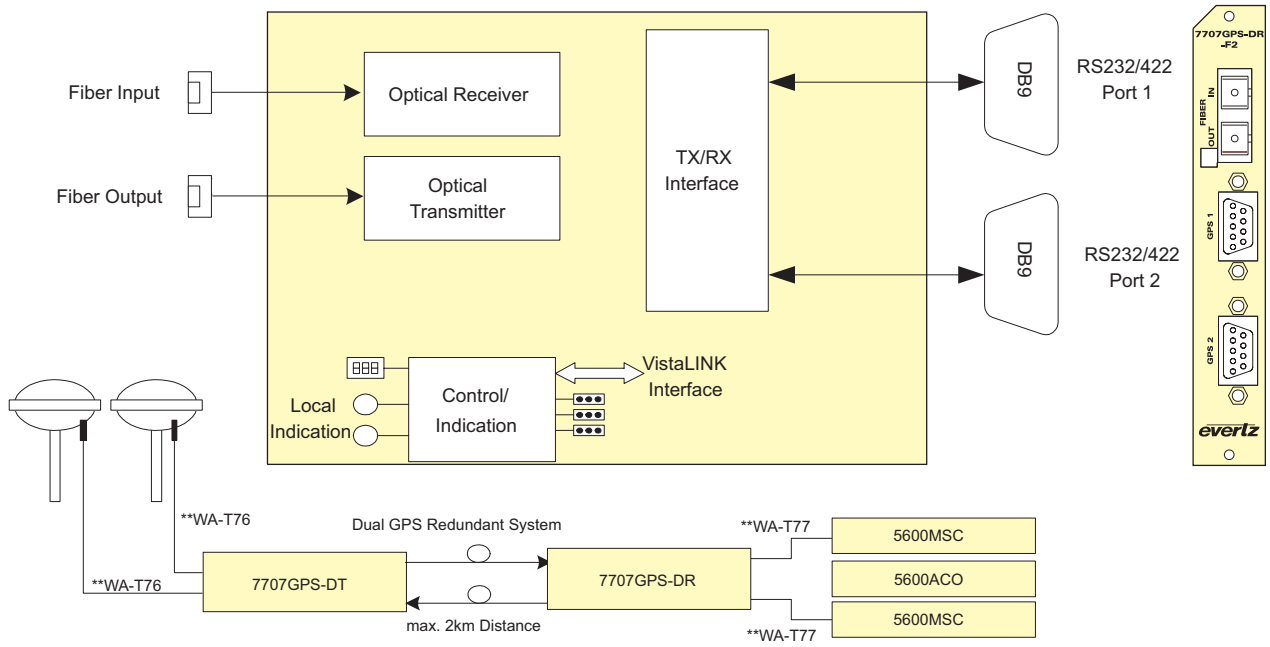

**Evertz recomends that only these cables be used for connecting the specified equipment to the 7707GPS-DT and 7707GPS-DR. See Accessories for ordering details.

Specifications

GPS Serial Data:
Number of Signals: 2 bi-directional GPS signals
Connector: 2xDB-9 connectors
Type: RS-232 or RS-422 (selectable)
Bit Rate RS-232/RS-422: 115kb/s

Optical Input/Outputs:
Number of Connections: 2
Connector: Female SC/PC, ST/PC or FC/PC
Max. Input Power: 0dBm
Input Optical Sensitivity: -22dBm
Fiber Size and Type
Dual Fiber (F2): 9µm core/single mode on TX, 62.5µm core/multi-mode on RX
Output Wavelength: 1310nm,1550nm (nominal)

Output Power:
Dual Fiber (F2)
1310nm FP (Standard): -7dBm ±1dBm
1550nm DFB: 0dBm ±1dBm

Electrical:
Voltage: +12V DC
Power: 6W

GPS Power:
Voltage: +17V DC
Power: 7W
Current: 200mA

Connecting Cables (see Ordering Options):**
Number of cables 2

Physical (Number of Slots):
7700 Frame Mounting: 1
7701 Frame Mounting: 1

Compliance:
Electrical Safety: CSA Listed to UL 60065-03, IEC 60065
Complies with CE Low voltage Directive
Laser Safety: Class 1 laser product
Complies with 24 CFR 1040.10 and 1040.11
IEC 60825-1
EMI/RFI: Complies with FCC Part 15, Class A
EU EMC Directive

Ordering Information

7707GPS-DR13-F2	Dual GPS Data Fiber Receiver, 1310nm FP Tx and Rx
7707GPS-DR15-F2	Dual GPS Data Fiber Receiver, 1550nm DFB Tx and Rx

Ordering Options Rear Plate and Fiber Connector must be specified at time of order
Eg: Model +SC +3RU

Rear Plate Suffix

+3RU	3RU rear plate for use with 7700FR-C Multiframe
+1RU	1RU rear plate for use with 7701FR Multiframe
+SA	Standalone Enclosure Rear Plate

Connector Suffix

+SC	SC/PC
+ST	ST/PC
+FC	FC/PC

Accessories

WA-T76	100' IF cable for 5600MSC, GPSII and 7707GPS-DT
WA-T77	100' IF cable for 7707GPS-DR to 5600MSC

*Notes** ***Please specify the quantity of WA-T76 and WA-T77 cables required to connect the 7707GPS-DT and 7707GPS-DR to the Accutime Head and 5600MSC or 5010-GPSII respectively. The 7707GPS-DT and 7707GPS-DR are only compatible with the WA-T76 and WA-T77 cables. See diagram and Accessories for more information.*

Enclosures

7700FR-C	3RU Multiframe which holds up to 15 single slot modules
7701FR	1RU Multiframe which holds up to 3 single or dual slot modules
S7701FR	Standalone Enclosure

7707EO-DS3

DS3 Electrical to Optical Converter

Features & Benefits

- Electrical to optical converter for DS3 (44.736Mb/s)
- Automatic cable equalization for up to 300m of high quality 75Ω coaxial cable
- Signal reclocking and jitter attenuation
- Output wave shaping for G.703 standards compliance
- Loss of signal (LOS) detection/indication (ANSI T1.231-1999 and ITU G.775)
- Electrical output drive level control for enhanced distance
- Transformer coupled inputs/outputs
- Optical output wavelengths of 1310nm, 1550nm, and up to sixteen CWDM wavelengths (ITU-T G.694.2 compliant)
- DWDM wavelengths (ITU-T G.694.1 compliant) also available
- Supports single-mode and multi-mode fiber optic cable
- Fully hot-swappable from front of frame
- Occupies one card slot and can be housed in either a 1RU frame that will hold up to 3 modules, a 3RU frame that will hold up to 15 modules or a standalone enclosure that will hold 1 module
- Comprehensive signal and card status monitoring via four digit card edge display or remotely through SNMP and VistaLINK®
- VistaLINK® capability is available when modules are used with the 3RU 7700FR-C frame and a 7700FC VistaLINK® Frame Controller module in slot 1 of the frame

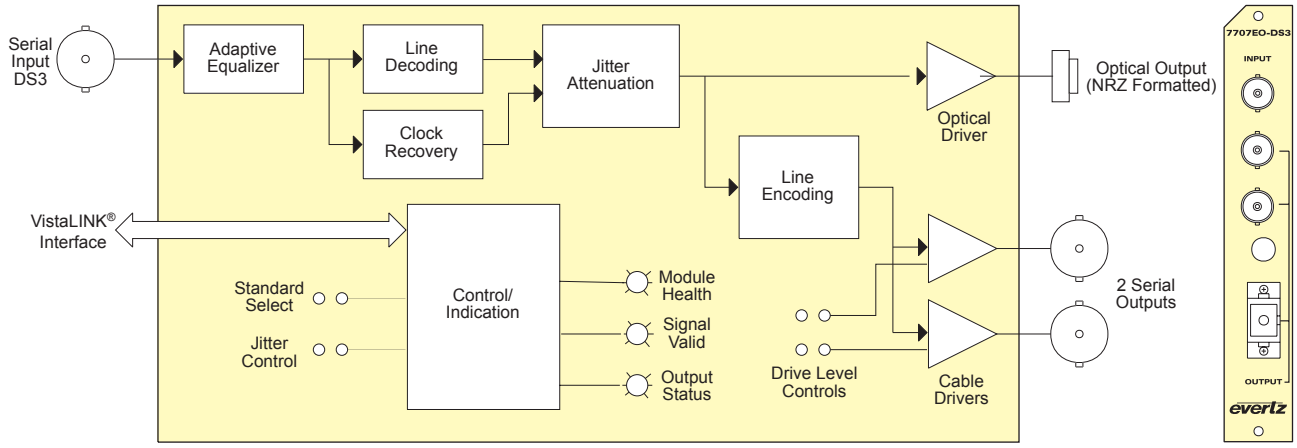

Specifications

Inputs:

Standard:	G.703 @ 44.736Mb/s
Connector:	1 Isolated BNC input
Equalization:	Automatic to 300m with Belden 8281 or equivalent cable
Return Loss:	> 20dB up to 44Mb/s

Outputs:

Standard:	G.703 @ 44.736Mb/s
Number of Outputs:	2 Per Card-Reclocked
Connector:	BNC per IEC 60169-8 Amendment 2
Waveform:	Conforms to G.703 compliant masks
Return Loss:	> 15dB up to 44.736Mb/s
Drive Level:	
High:	For driving cable lengths > 70m
Low:	For driving cable lengths < 70m

Optical Output:

Number of Outputs:	1 Scrambled DS3 @ 44.736Mb/s
Connector:	Female SC/PC, ST/PC or FC/PC
Return Loss:	> 14dB
Fiber Size:	9µm core/125µm overall
Wavelengths:	(See ordering information)
Output Power:	
1310nm FP:	-7dBm ±1dB
1550nm/CWDM DFB:	0dBm ±1dB
DWDM DFB:	7dBm ±1dBm

Electrical:

Voltage:	+ 12V DC
Power:	6W (Non-DWDM), 9W (DWDM)
EMI/RFI:	Complies with FCC Part 15, Class A EU EMC Directive

Physical:

Number of slots:	1

Compliance:

Electrical Safety:	CSA Listed to UL 60065-03, IEC 60065 Complies with CE Low voltage Directive
Laser Safety:	Class 1 laser product Complies with 24 CFR 1040.10 and 1040.11 IEC 60825-1
EMI/RFI:	Complies with FCC Part 15, Class A EU EMC directive

Ordering Information

7707EO13-DS3	DS3 Electrical to Optical Converter, VistaLINK®, 1310nm, FP Laser
7707EO15-DS3	DS3 Electrical to Optical Converter, 1550nm DFB Laser, VistaLINK®

For CWDM, please refer to the end of the fiber section for ordering information

7707EOxx-DS3	DS3 Electrical to Optical Converter, CWDM DFB Laser, VistaLINK®

For DWDM, please refer to the end of the fiber section for ordering information

7707EODxxx-DS3	DS3 (45Mb/s) Electrical to Optical Converter, DWDM Laser, +7dBm, VistaLINK®

Ordering Options	Rear Plate and Fiber Connector must be specified at time of order Eg: Model +SC +3RU

Rear Plate Suffix

+3RU	3RU Rear Plate for use with 7700FR-C Multiframe
+1RU	1RU Rear Plate for use with 7701FR Multiframe
+SA	Standalone Enclosure Rear Plate

Connector Suffix

+SC	SC/PC
+ST	ST/PC
+FC	FC/PC

Enclosures

7700FR-C	3RU Multiframe which holds up to 15 single slot modules
7701FR	1RU Multiframe which holds up to 3 single or dual slot modules
S7701FR	Standalone enclosure

Features & Benefits

- Optical to electrical converter for DS3 (44.736Mb/s)
- Signal reclocking and jitter attenuation
- Output wave shaping for G.703 standards compliance
- Output 1010 pattern generation upon loss of lock to an input signal
- Electrical output drive level control for enhanced distance
- Transformer coupled outputs
- Display of received optical power provides a pre-emptive indication of link integrity
- Wide range optical input (1270nm-1610nm)
- Supports single-mode and multi-mode fiber optic cable
- Fully hot-swappable from front of frame
- Occupies one card slot and can be housed in either a 1RU frame that will hold up to 3 modules, a 3RU frame that will hold up to 15 modules or a standalone enclosure that will hold 1 module
- Comprehensive signal and card status monitoring via four digit card edge display or remotely through SNMP and VistaLINK®
- VistaLINK® capability is available when modules are used with the 3RU 7700FR-C frame and a 7700FC VistaLINK® Frame Controller module in slot 1 of the frame

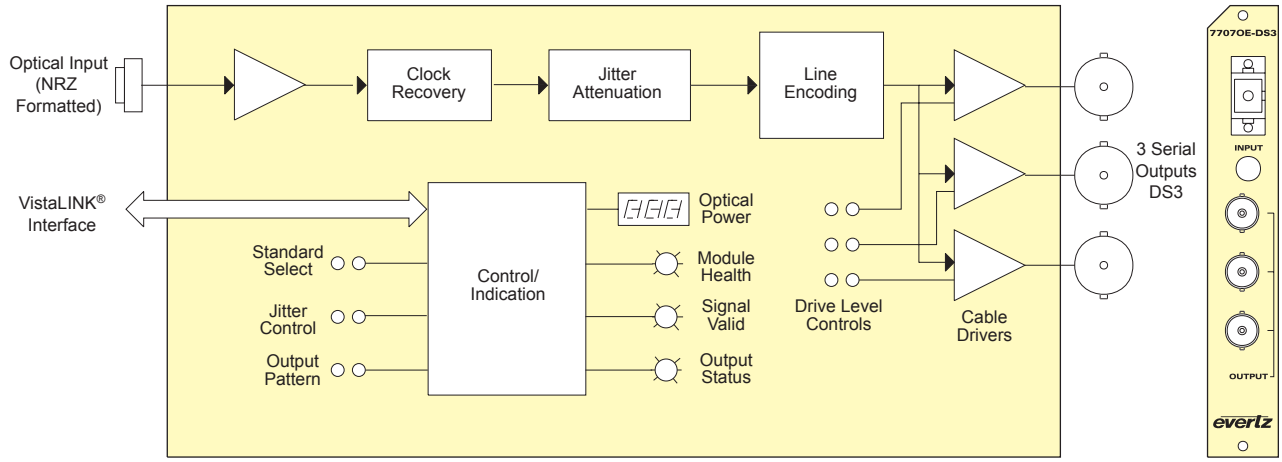

Specifications

Optical Input:

Number of Inputs:	1 Scrambled DS3 @ 44.736Mb/s
Connector:	Female SC/PC, ST/PC or FC/PC
Wavelength:	1270nm-1610nm
Optical Sensitivity:	-31dBm
Max. Input Power:	0dBm
Fiber Size:	62µm core/125µm overall

Outputs:

Number of Outputs:	3 per card-reclocked
Connector:	BNC per IEC 60169-8 Amendment 2
Waveform:	Conforms to G.703 compliant masks
Return Loss:	> 15dB up to 44.736Mb/s
Drive Level:	
High:	For driving cable lengths > 70m
Low:	For driving cable lengths < 70m

Electrical:

Voltage:	+12V DC
Power:	6W
EMI/RFI:	Complies with FCC Part 15, Class A EU EMC Directive

Physical:

Number of slots:	1

Ordering Information

7707OE-DS3	Optical to Electrical Converter, VistaLINK® Monitoring

Ordering Options Rear Plate and Fiber Connector must be specified at time of order
Eg: Model +SC +3RU

Rear Plate Suffix

+3RU	3RU rear plate for use with 7700FR-C Multiframe
+1RU	1RU rear plate for use with 7701FR Multiframe
+SA	Standalone Enclosure Rear Plate

Connector Suffix

+SC	SC/PC
+ST	ST/PC
+FC	FC/PC

Fiber Optic Patch Cable

CB-FP1M-SCPC	Single mode fiber cable, 1m, SC/PC male termination
CB-FP1M-STPC	Single mode fiber cable, 1m, ST/PC male termination
CB-FP5M-SCPC	Single mode fiber cable, 5m, SC/PC male termination
CB-FP5M-STPC	Single mode fiber cable, 5m, ST/PC male termination
CB-FP10M-SCPC	Single mode fiber cable, 10m, SC/PC male termination
CB-FP10M-STPC	Single mode fiber cable, 10m, ST/PC male termination

Enclosures

7700FR-C	3RU Multiframe which holds up to 15 single slot modules
7701FR	1RU Multiframe which holds up to 3 single or dual slot modules
S7701FR	Standalone Enclosure

7707EO-E3

E3 Electrical to Optical Converter

Features & Benefits

- Electrical to optical converter for E3 (34.368Mb/s)
- Automatic cable equalization for up to 300m of high quality 75Ω coaxial cable
- Signal reclocking and jitter attenuation
- Output wave shaping for G.703 standards compliance
- Loss of signal (LOS) detection/indication (ANSI T1.231-1999 and ITU G.775)
- Electrical output drive level control for enhanced distance
- Transformer coupled inputs/outputs
- Optical output wavelengths of 1310nm, 1550nm, and up to sixteen CWDM wavelengths (ITU-T G.694.2 compliant)
- DWDM wavelengths (ITU-T G.694.1 compliant) also available
- Supports single-mode and multi-mode fiber optic cable
- Fully hot-swappable from front of frame
- Occupies one card slot and can be housed in either a 1RU frame that will hold up to 3 modules, a 3RU frame that will hold up to 15 modules or a standalone enclosure that will hold 1 module
- Comprehensive signal and card status monitoring via four digit card edge display or remotely through SNMP and VistaLINK®
- VistaLINK® capability is available when modules are used with the 3RU 7700FR-C frame and a 7700FC VistaLINK® Frame Controller module in slot 1 of the frame

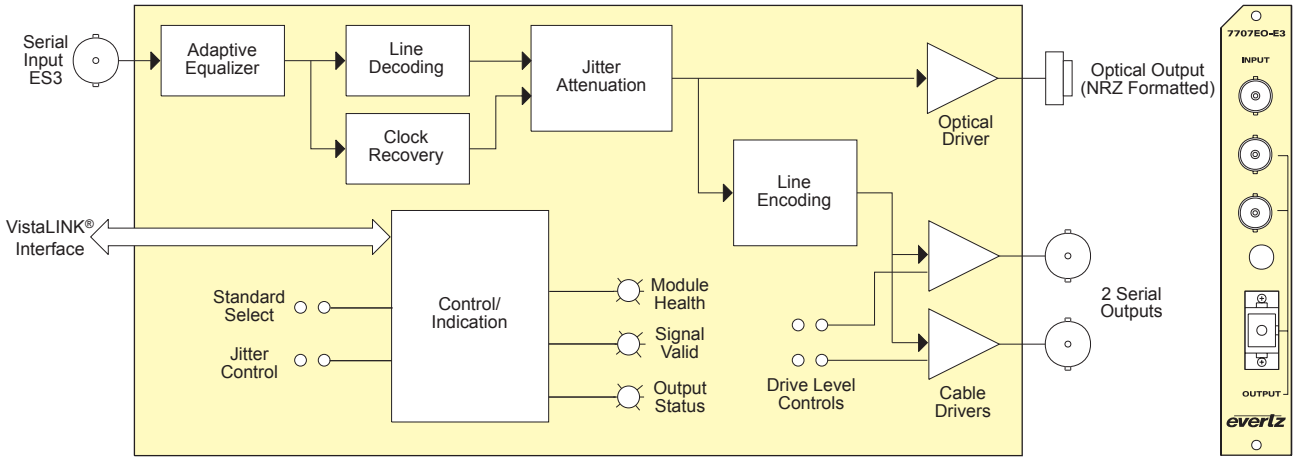

Specifications

Inputs:

Standard:	G.703 @ 34.368Mb/s
Connector:	1 Isolated BNC input
Equalization:	Automatic to 300m with Belden 8281 or equivalent cable
Return Loss:	> 20dB up to 34MHz

Outputs:

Standard:	G.703 @ 34.368Mb/s
Number of Outputs:	2 Per Card-Reclocked
Connector:	BNC per IEC 60169-8 Amendment 2
Waveform:	Conforms to G.703 compliant masks
Return Loss:	> 15dB up to 34MHz
Drive Level:	
High:	For driving cable lengths > 70m
Low:	For driving cable lengths < 70m

Optical Output:

Number of Outputs:	1 Scrambled E3 @ 34.368Mb/s
Connector:	Female SC/PC, ST/PC or FC/PC
Return Loss:	> 14dB
Fiber Size:	9µm core/125µm overall
Wavelengths:	(See ordering information)
Output Power:	
1310nm FP:	-7dBm ±1dB
1550nm CWDM DFB:	0dBm ±1dB
DWDM DFB:	7dBm ±1dBm

Electrical:

Voltage:	+ 12V DC
Power:	6W (Non-DWDM), 9W (DWDM)
EMI/RFI:	Complies with FCC Part 15, Class A EU EMC Directive

Physical:

Number of slots:	1

Compliance:

Electrical Safety:	CSA Listed to UL 60065-03, IEC 60065 Complies with CE Low voltage Directive
Laser Safety:	Class 1 laser product Complies with 24 CFR 1040.10 and 1040.11 IEC 60825-1
EMI/RFI:	Complies with FCC Part 15, Class A EU EMC directive

Ordering Information

7707EO13-E3	E3 Electrical to Optical Converter, VistaLINK®, 1310nm, FP Laser
For CWDM, please refer to the end of the fiber section for ordering information	
7707EOxx-E3	E3 Electrical to Optical Converter, CWDM DFB Laser, VistaLINK®
For DWDM, please refer to the end of the fiber section for ordering information	
7707EODxxx-E3	E3 Electrical to Optical Converter, DWDM Laser, +7dBm, VistaLINK®

Ordering Options	Rear Plate and Fiber Connector must be specified at time of order Eg: Model +SC +3RU
Rear Plate Suffix	
+3RU	3RU Rear Plate for use with 7700FR-C Multiframe
+1RU	1RU Rear Plate for use with 7701FR Multiframe
+SA	Standalone Enclosure Rear Plate
Connector Suffix	
+SC	SC/PC
+ST	ST/PC
+FC	FC/PC
Enclosures	
7700FR-C	3RU Multiframe which holds up to 15 single slot modules
7701FR	1RU Multiframe which holds up to 3 single or dual slot modules
S7701FR	Standalone enclosure

Features & Benefits

- Optical to electrical converter for E3 (34.368Mb/s)
- Signal reclocking and jitter attenuation
- Output wave shaping for G.703 standards compliance
- Output 1010 pattern generation upon loss of lock to an input signal
- Electrical output drive level control for enhanced distance
- Transformer coupled outputs
- Display of received optical power provides a pre-emptive indication of link integrity
- Wide range optical input (1270nm-1610nm)
- Supports single-mode and multi-mode fiber optic cable
- Fully hot-swappable from front of frame
- Occupies one card slot and can be housed in either a 1RU frame that will hold up to 3 modules, a 3RU frame that will hold up to 15 modules or a standalone enclosure that will hold 1 module
- Comprehensive signal and card status monitoring via four digit card edge display or remotely through SNMP and VistaLINK®
- VistaLINK® capability is available when modules are used with the 3RU 7700FR-C frame and a 7700FC VistaLINK® Frame Controller module in slot 1 of the frame

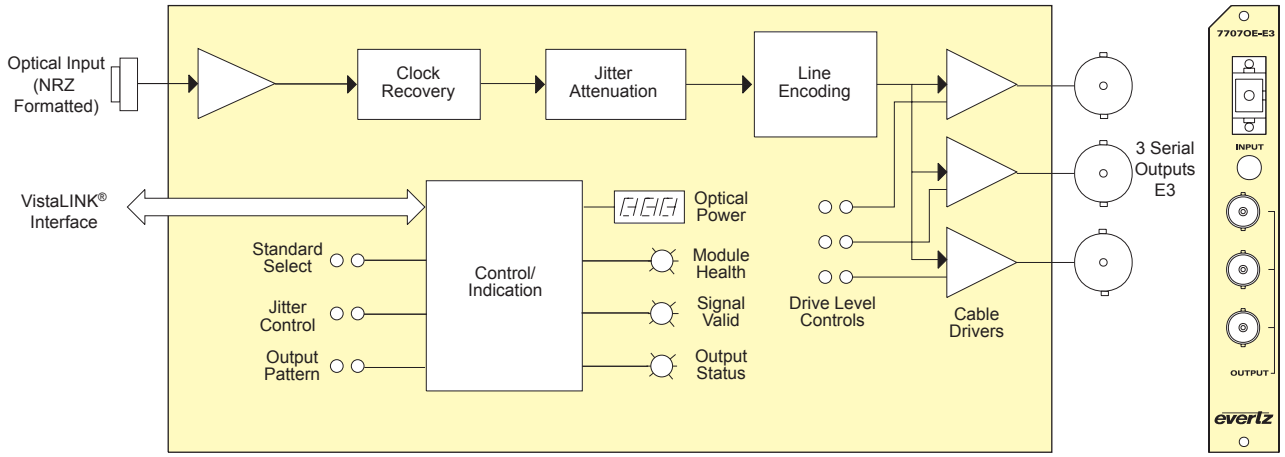

Specifications

Optical Input:

Number of Inputs:	1 Scrambled E3 @ 34.368Mb/s
Connector:	Female SC/PC, ST/PC or FC/PC
Wavelength:	1270nm-1610nm
Optical Sensitivity:	-31dBm
Max. Input Power:	0dBm
Fiber Size:	62µm core/125µm overall

Outputs:

Number of Outputs:	3 per card-reclocked
Connector:	BNC per IEC 60169-8 Amendment 2
Waveform:	Conforms to G.703 compliant masks
Return Loss:	> 15dB up to 34MHz
Drive Level:	
High:	For driving cable lengths > 70m
Low:	For driving cable lengths < 70m

Electrical:

Voltage:	+ 12V DC
Power:	6W
EMI/RFI:	Complies with FCC Part 15, Class A EU EMC Directive

Physical:

Number of slots:	1

Ordering Information

7707OE-E3	E3 Optical to Electrical Converter, VistaLINK® Monitoring

Ordering Options Rear Plate and Fiber Connector must be specified at time of order
Eg: Model +SC +3RU

Rear Plate Suffix

+3RU	3RU rear plate for use with 7700FR-C Multiframe
+1RU	1RU rear plate for use with 7701FR Multiframe
+SA	Standalone Enclosure Rear Plate

Connector Suffix

+SC	SC/PC
+ST	ST/PC
+FC	FC/PC

Fiber Optic Patch Cable

CB-FP1M-SCPC	Single mode fiber cable, 1m, SC/PC male termination
CB-FP1M-STPC	Single mode fiber cable, 1m, ST/PC male termination
CB-FP5M-SCPC	Single mode fiber cable, 5m, SC/PC male termination
CB-FP5M-STPC	Single mode fiber cable, 5m, ST/PC male termination
CB-FP10M-SCPC	Single mode fiber cable, 10m, SC/PC male termination
CB-FP10M-STPC	Single mode fiber cable, 10m, ST/PC male termination

Enclosures

7700FR-C	3RU Multiframe which holds up to 15 single slot modules
7701FR	1RU Multiframe which holds up to 3 single or dual slot modules
S7701FR	Standalone Enclosure

7707VT-8-OC48

Eight Channel SDI + Ethernet SONET / SDH Fiber Transmitter

Features & Benefits

- Transports signals over OC-48/STM-16 data rates (2.488Gb/s)
- Single card TDM multiplexer for eight asynchronous SD-SDI, SDTi and DVB-ASI signals
- Built-in Ethernet transceiver with one 10/100 Base-T port
- Interfaces directly to SONET/SDH infrastructure
- Uncompressed, full-rate video transport
- Signal transport over fiber uninterrupted by loss of any input feed
- Transparently passes embedded AES or any other data in the horizontal or vertical ancillary data space
- Stratum 3 wander/holdover/jitter compliance
- Wide input frequency range tolerance (±50ppm)
- Fully hot-swappable from front of frame
- Supports single-mode and multi-mode fiber optic cable
- Optical output wavelengths of 1310nm, 1550nm, and up to sixteen CWDM wavelengths (ITU-T G.694.2 compliant)
- DWDM wavelength (ITU-T G.694.1 compliant) support
- SC/PC, ST/PC, FC/PC connector options
- Comprehensive signal and card status monitoring via four digit card edge display or remotely through SNMP and VistaLINK®
- VistaLINK® capability is available when modules are used with the 3RU 7700FR-C frame and a 7700FC VistaLINK® Frame Controller module in slot 1 of the frame
- Occupies two card slots and can be housed in a standalone frame, a 1RU frame that holds up to 3 modules or a 3RU frame that holds up to 7 modules

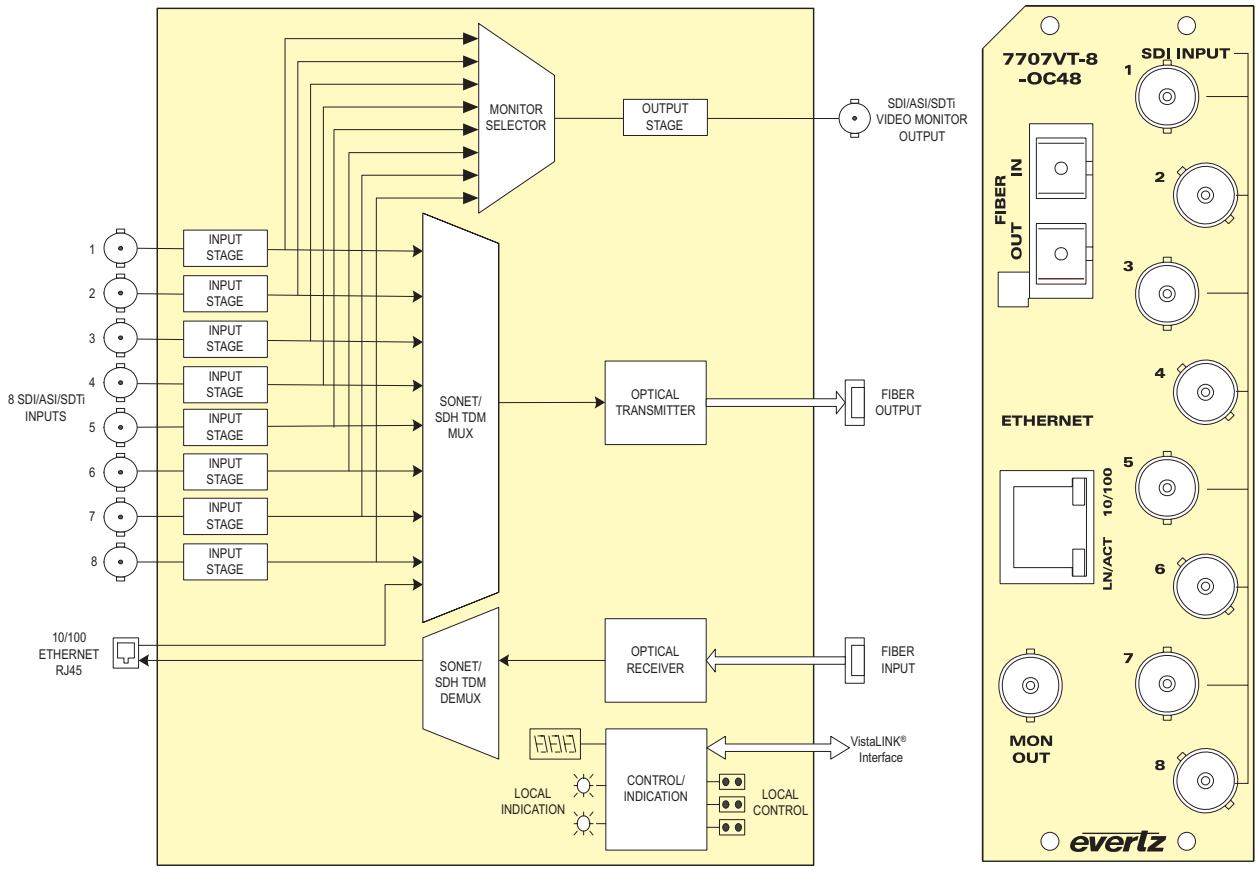

Specifications

Serial Video Intput:
Standards: SMPTE 259M-C, DVB-ASI, SMPTE 305M (SDTi)
Number of Inputs: 8
Connector: BNC per IEC 60169-8 Amendment 2
Equalization: Automatic to 250m @ 270Mb/s with Belden 1694 or equivalent cable
Return Loss: > 15dB up to 1.5Gb/s
Frequency Offset Tolerance: ±50ppm

Serial Video Monitor Output:
Standards: SMPTE 259M-C, DVB-ASI, SMPTE 305M (SDTi)
Number of Outputs: 1, signal user-selectable from the 8 inputs
Connector: BNC per IEC 60169-8 Amendment 2
Signal Level: 800mV nominal
DC Offset: 0V ±0.5V
Rise and Fall Time: 900ps nominal
Overshoot: < 10% of amplitude
Return Loss: > 12dB
Wideband Jitter: < 0.2 UI

Optical Output:
Standards: OC-48/STM-16
Number of Outputs: 1
Connector: Female SC/PC, ST/PC or FC/PC
Return Loss: > 14dB
Wideband Jitter: < 0.2 UI
Fiber Size: 9µm core/125µm overall
Wavelength:
Standard: 1310nm, 1550nm (nominal)
CWDM: 1270nm to 1610nm (See Ordering Information)
DWDM: C-Band (ITU-T G.694.1 Compliant) (See Ordering Information)
Power:
1310nm FP (Standard): -7dBm ±1dBm
1550nm & CWDM DFB: 0dBm ±1dBm
DWDM DFB: +7dBm ±1dBm

Optical Input:
Number of Inputs: 1
Standards: OC-48/STM-16
Connector: Female SC/PC, ST/PC or FC/PC
Return Loss: > 25dB
Wavelength: 1270nm to 1610nm
Maximum Input Power:
Standard: -1dBm
High Sensitivity (-H): -8dBm
Optical Sensitivity:
Standard: -21dBm
High Sensitivity (-H): -28dBm

Electrical:
Voltage: +12V DC
Power: 10W (non DWDM)
13W (DWDM)

Physical:
Number of Slots: 2

Compliance:
Electrical Safety: CSA Listed to CSA C22.2 No. 60065-03 IEC 60065-(2001-12) 7th Edition Complies with CE Low voltage directive 93/68/EEC
Laser Safety: Complies with 24 CFR 1040.10 and 1040.11 except for deviations pursuant to LN No. 50, dated July 26, 2001 Complies with IEC 60825-1, Am. 2
EMI/RFI: Complies with FCC regulations for class A devices
Complies with EU EMC directive 89/336/EEC

Ordering Information

7707VT13-8-OC48 Eight Channel SDI + Ethernet SONET/SDH Fiber Transmitter, 1310nm FP laser, VistaLINK®

For CWDM applications please refer to the end of the fiber section for details
7707VTxx-8-OC48
Eight Channel SDI + Ethernet SONET/SDH Fiber Transmitter, CWDM DFB laser, VistaLINK®
7707VTxx-8-OC48-H
Eight Channel SDI + Ethernet SONET/SDH Fiber Transmitter, CWDM DFB laser, high sensitivity receiver, VistaLINK®

For DWDM applications please refer to the end of the fiber section for details
7707VTDxxx-8-OC48 Eight Channel SDI + Ethernet SONET/SDH Fiber Transmitter, DWDM DFB laser, VistaLINK®
7707VTDxxx-8-OC48-H
Eight Channel SDI + Ethernet SONET/SDH Fiber Transmitter, DWDM DFB laser, high sensitivity receiver, VistaLINK®

Ordering Options Rear Plate and Fiber Connector must be specified at time of order
Eg: Model +SC +3RU

Rear Plate Suffix
+3RU 3RU Rear Plate for use with 7700FR-C Multiframe
+1RU 1RU Rear Plate for use with 7701FR Multiframe
+SA Standalone Enclosure Rear Plate

Enclosures
7700FR-C 3RU Multiframe which holds up to 15 single slot modules
7701FR 1RU Multiframe which holds up to 3 single or dual slot modules
S7701FR Standalone enclosure

7707VR-8-OC48

Eight Channel SDI + Ethernet SONET/SDH Fiber Receiver

Features & Benefits

- Transports signals over OC-48/STM-16 data rates (2.488Gb/s)
- Single card TDM multiplexer for eight asynchronous SD-SDI, SDTi and DVB-ASI signals
- Built-in Ethernet transceiver with one 10/100 Base-T port
- Interfaces directly to SONET/SDH infrastructure
- Uncompressed, full-rate video transport
- Signal transport over fiber uninterrupted by loss of any input feed
- Transparently passes embedded AES or any other data in the horizontal or vertical ancillary data space
- Stratum 3 wander/holdover/jitter compliance
- Wide input frequency range tolerance (±50ppm)
- Fully hot-swappable from front of frame
- Supports single-mode and multi-mode fiber optic cable
- Optical output wavelengths of 1310nm, 1550nm, and up to sixteen CWDM wavelengths (ITU-T G.694.2 compliant)
- DWDM wavelength (ITU-T G.694.1 compliant) support
- SC/PC, ST/PC, FC/PC connector options
- Comprehensive signal and card status monitoring via four digit card edge display or remotely through SNMP and VistaLINK®
- VistaLINK® capability is available when modules are used with the 3RU 7700FR-C frame and a 7700FC VistaLINK® Frame Controller module in slot 1 of the frame
- Occupies two card slots and can be housed in a standalone frame, a 1RU frame that holds up to 3 modules or a 3RU frame that holds up to 7 modules

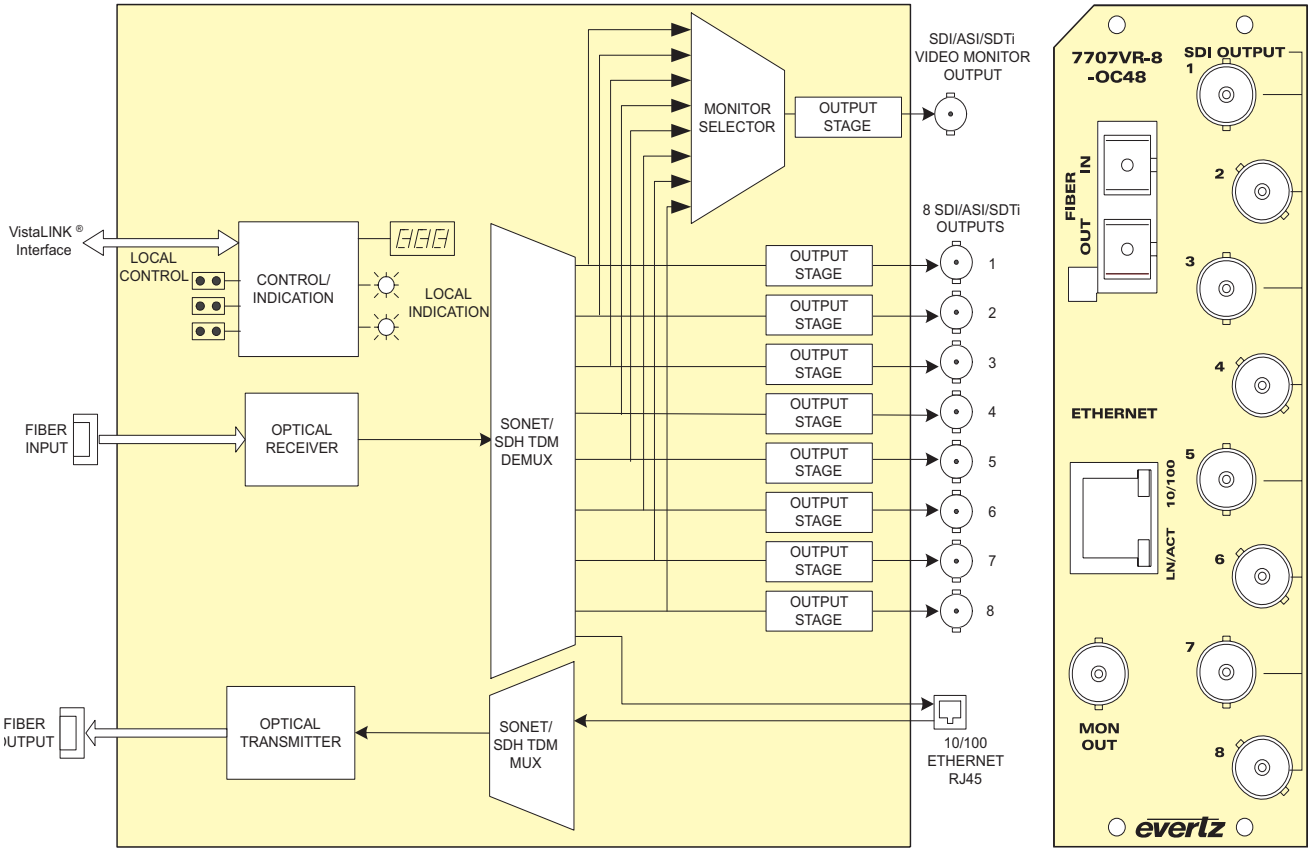

Specifications

Serial Video Output:

Standards:	SMPTE 259M-C, DVB-ASI, SMPTE 305M (SDTi)
Number of Outputs:	8 (+1 monitor with user-selectable source)
Connector:	BNC per IEC 60169-8 Amendment 2
Signal Level:	800mV nominal
DC Offset:	0V ±0.5V
Rise and Fall Time:	900ps nominal at 270Mb/s
Overshoot:	< 10% of amplitude
Return Loss:	> 12dB
Wideband Jitter:	< 0.2 UI

Serial Video Monitor Output:

Standards:	SMPTE 259M-C, DVB-ASI, SMPTE 305M (SDTi)
Number of Outputs:	1, signal user-selectable from the 8 inputs
Connector:	BNC per IEC 60169-8 Amendment 2
Signal Level:	800mV nominal
DC Offset:	0V ±0.5V
Rise and Fall Time:	900ps nominal
Overshoot:	< 10% of amplitude
Return Loss:	> 12dB
Wideband Jitter:	< 0.2 UI

Optical Output:

Standards:	OC-48/STM-16
Number of Outputs:	1
Connector:	Female SC/PC, ST/PC or FC/PC
Return Loss:	> 14dB
Wideband Jitter:	< 0.2 UI
Fiber Size:	9µm core/125µm overall
Wavelength:	
Standard:	1310nm, 1550nm (nominal)
CWDM:	1270nm to 1610nm (See Ordering Information)
DWDM:	C-Band (ITU-T G.694.1 compliant) (See Ordering Information)
Power:	
1310nm FP (Standard):	-7dBm ±1dBm
1550nm & CWDM DFB:	0dBm ±1dBm
DWDM DFB:	+7dBm ±1dBm

Optical Input:

Standards:	OC-48/STM-16
Number of Inputs:	1
Connector:	Female SC/PC, ST/PC or FC/PC
Return Loss:	> 25dB
Wavelength:	1270nm to 1610nm
Maximum Input Power:	
Standard:	-1dBm
High Sensitivity (-H):	-8dBm
Optical Sensitivity:	
Standard:	-21dBm
High Sensitivity (-H):	-28dBm

Electrical:

Voltage	+12V DC
Power	10W (non DWDM) 13W (DWDM)

Physical:

Number of Slots	1

Compliance:

Electrical Safety:	CSA Listed to CSA C22.2 No. 60065-03IEC 60065-(2001-12) 7th EditionComplies with CE Low voltage directive 93/68/EEC
Laser Safety:	Complies with 24 CFR 1040.10 and 1040.11 except for deviations pursuant to LN No. 50, dated July 26, 2001Complies with IEC 60825-1, Am. 2
EMI/RFI	Complies with FCC regulations for class A devices Complies with EU EMC directive 89/336/EEC

Ordering Information

7707VR13-8-OC48 Eight Channel SDI + Ethernet SONET/SDH Fiber Receiver, 1310nm FP laser, VistaLINK®

For CWDM applications please refer to the end of the fiber section for details

7707VRxx-8-OC48
Eight Channel SDI + Ethernet SONET/SDH Fiber Receiver, CWDM DFB laser, VistaLINK®

7707VRxx-8-OC48-H
Eight Channel SDI + Ethernet SONET/SDH Fiber Receiver, CWDM DFB laser, high sensitivity receiver, VistaLINK®

For DWDM applications please refer to the end of the fiber section for details

7707VRDxxx-8-OC48
Eight Channel SDI + Ethernet SONET/SDH Fiber Receiver, DWDM DFB laser, VistaLINK®

7707VRDxxx-8-OC48-H
Eight Channel SDI + Ethernet SONET/SDH Fiber Receiver, DWDM DFB laser, high sensitivity receiver, VistaLINK®

Ordering Options Rear Plate and Fiber Connector must be specified at time of order
Eg: Model +SC +3RU

Rear Plate Suffix

+3RU	3RU Rear Plate for use with 7700FR-C Multiframe
+1RU	1RU Rear Plate for use with 7701FR Multiframe
+SA	Standalone Enclosure Rear Plate

Enclosures

7700FR-C	3RU Multiframe which holds up to 15 single slot modules
7701FR	1RU Multiframe which holds up to 3 single or dual slot modules
S7701FR	Standalone enclosure

7707VT-2-OC12

Dual SDI/ASI/SDTi + Ethernet SONET/SDH Fiber Transmitter

Features & Benefits

- Transports signals at the OC-12/STM-4 rate
- Single card TDM multiplexer for two asynchronous SDI, DVB-ASI & SDTi signals
- Built-in Ethernet transceiver with one 10/100 Base-T compatible port
- Interfaces directly to the SONET/SDH infrastructure
- Signal transport over fiber uninterrupted by loss of any input feed
- Transparently passes embedded AES or any other data in the horizontal or vertical ancillary data space
- Stratum 3 wander/holdover/jitter compliance
- Wide input frequency range tolerance (±50ppm)
- Fully hot-swappable from front of frame
- Supports single-mode and multi-mode fiber optic cable
- Optical output wavelengths of 1310nm, 1550nm, and up to sixteen CWDM wavelengths (ITU-T G.694.2 compliant)
- DWDM wavelengths (ITU-T G.694.1 compliant) also available
- SC/PC, ST/PC, FC/PC connector options
- Comprehensive signal and card status monitoring via four digit card edge display or remotely through SNMP and VistaLINK®
- VistaLINK® capability is available when modules are used with the 3RU 7700FR-C frame and a 7700FC VistaLINK® Frame Controller module in slot 1 of the frame
- Occupies two card slots and can be housed in a standalone frame, a 1RU frame that holds up to 3 modules or a 3RU frame that holds up to 7 modules

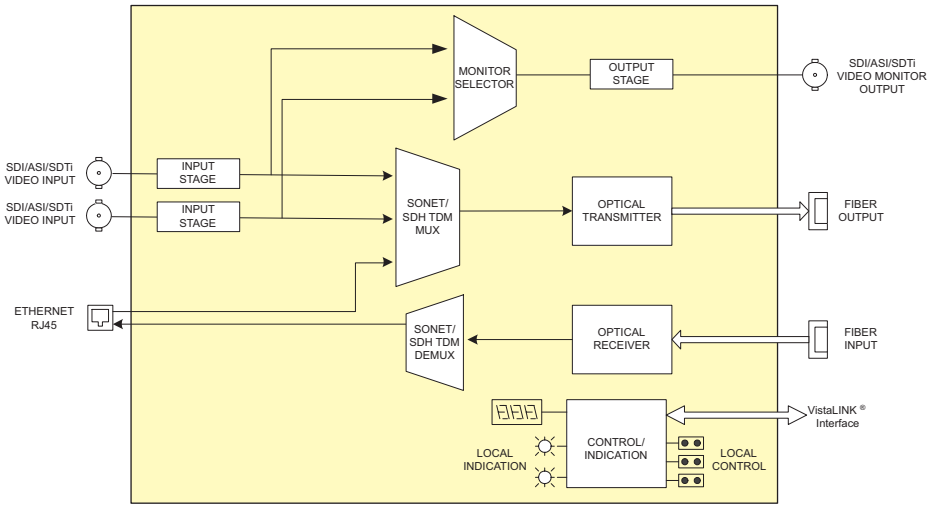

Specifications

Serial Video Input:

Standards:	SMPTE 259M-C, DVB-ASI, SMPTE 305M
Number of Inputs:	2
Connector:	BNC per IEC 60169-8 Amendment 2
Equalization:	Automatic to 250m @ 270Mb/s with Belden 1694 or equivalent cable
Return Loss:	> 15dB up to 270Mb/s
Frequency Offset Tolerance:	+50ppm

Serial Video Monitor Output:

Standards:	SMPTE 259M-C, DVB-ASI, SMPTE 305M (SDTi)
Number of Outputs:	1, signal user-selectable from the 2 inputs
Connector:	BNC per IEC 60169-8 Amendment 2
Signal Level:	800mV nominal
DC Offset:	0V ±0.5V
Rise and Fall Time:	900ps nominal @ 270Mb/s
Overshoot:	< 10% of amplitude
Return Loss:	> 12dB to 270Mb/s
Wideband Jitter:	< 0.2 UI

Optical Output:

Standards:	OC-12/STM-4
Number of Outputs:	1
Connector:	Female SC/PC, ST/PC or FC/PC
Return Loss:	> 14dB
Wideband Jitter:	< 0.2 UI
Fiber Size:	9µm core/125µm overall
Wavelength:	
Standard:	1310nm, 1550nm (nominal)
CWDM:	1270nm to 1610nm (See Ordering Information)
DWDM:	C-Band (ITU-T G.694.1 compliant) (See Ordering Information)
Power:	
1310nm FP (Standard):	-7dBm ±1dBm
1550nm & CWDM DFB:	0dBm ±1dBm
DWDM DFB:	+7dBm ±1dBm

Optical Input:

Standards:	OC-12/STM-4
Number of Inputs:	1
Connector:	Female SC/PC, ST/PC or FC/PC
Return Loss:	> 25dB
Wavelength:	1270nm to 1610nm
Maximum Input Power:	
Standard:	-1dBm
Optical Sensitivity:	
Standard:	-28dBm

Electrical:

Voltage:	+12V DC
Power:	10W (non DWDM) 13W (DWDM)

Physical:

Number of Slots:	2

Compliance:

Electrical Safety:	CSA Listed to CSA C22.2 No. 60065-03IEC 60065-(2001-12) 7th Edition Complies with CE Low voltage directive 93/68/EEC
Laser Safety:	Complies with 24 CFR 1040.10 and 1040.11 except for deviations pursuant to LN No. 50, dated July 26, 2001Complies with IEC 60825-1, Am. 2
EMI/RFI:	Complies with FCC regulations for class A devices Complies with EU EMC directive 89/336/EEC

Ordering Information

7707VT13-2-OC12	Dual SDI/ASI/SDTi + Ethernet SONET/SDH Fiber Transmitter, 1310nm FP laser, VistaLINK®
7707VT15-2-OC12	Dual SDI/ASI/SDTi + Ethernet SONET/SDH Fiber Transmitter, 1550nm DFB laser (0dBm), VistaLINK®

For CWDM applications please refer to the end of the fiber section for details

7707VTxx-2-OC12
Dual SDI/ASI/SDTi + Ethernet SONET/SDH Fiber Transmitter, CWDM DFB laser, VistaLINK®

For DWDM applications please refer to the end of the fiber section for details

7707VTDxxx-2-OC12
Dual SDI/ASI/SDTi + Ethernet SONET/SDH Fiber Transmitter, DWDM DFB laser, VistaLINK®

Ordering Options Rear Plate and Fiber Connector must be specified at time of order
Eg: Model +SC +3RU

Rear Plate Suffix

+3RU	3RU Rear Plate for use with 7700FR-C Multiframe
+1RU	1RU Rear Plate for use with 7701FR Multiframe
+SA	Standalone Enclosure Rear Plate

Connector Suffix

+SC	SC/PC
+ST	ST/PC
+FC	FC/PC

Enclosures

7700FR-C	3RU Multiframe which holds up to 15 single slot modules
7701FR	1RU Multiframe which holds up to 3 single or dual slot modules
S7701FR	Standalone enclosure

Features & Benefits

- Transports signals at the OC-12/STM-4 rate
- Single card TDM multiplexer for two asynchronous SDI, DVB-ASI & SDTi signals
- Built-in Ethernet transceiver with one 10/100 Base-T compatible port
- Interfaces directly to the SONET/SDH infrastructure
- Transparently passes embedded AES or any other data in the horizontal or vertical ancillary data space
- Stratum 3 wander/holdover/jitter compliance
- Fully hot-swappable from front of frame
- Supports single-mode and multi-mode fiber optic cable
- Optical output wavelengths of 1310nm, 1550nm, and up to sixteen CWDM wavelengths (ITU-T G.694.2 compliant)
- DWDM wavelengths (ITU-T G.694.1 compliant) also available
- SC/PC, ST/PC, FC/PC connector options
- Comprehensive signal and card status monitoring via four digit card edge display or remotely through SNMP and VistaLINK®
- VistaLINK® capability is available when modules are used with the 3RU 7700FR-C frame and a 7700FC VistaLINK® Frame Controller module in slot 1 of the frame
- Occupies two card slots and can be housed in a standalone frame, a 1RU frame that holds up to 3 modules or a 3RU frame that holds up to 7 modules

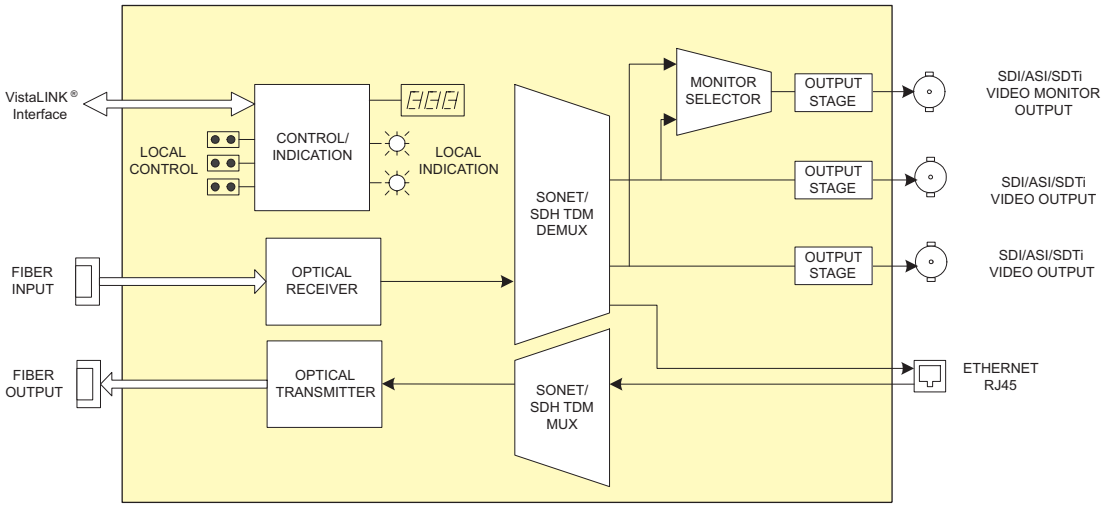

Specifications

Serial Video Output:

Standards:	SMPTE 259M-C, DVB-ASI, SMPTE 305M
Number of Outputs:	2+1 monitor with user selectable source
Connector:	BNC per IEC 60169-8 Amendment 2
Signal Level:	800mV nominal
DC Offset:	0V ±0.5V
Rise and Fall Time:	900ps nominal @ 270 Mb/s
Overshoot:	< 10% of amplitude
Return Loss:	> 12dB
Wideband Jitter:	< 0.2 UI

Optical Output:

Number of Outputs:	1
Standards:	OC-12/STM-4
Connector:	Female SC/PC, ST/PC or FC/PC
Return Loss:	> 14dB
Wideband Jitter:	< 0.2 UI
Fiber Size:	9µm core/125µm overall
Wavelength:	
Standard:	1310nm, 1550nm (nominal)
CWDM:	1270nm to 1610nm (See Ordering Information)
DWDM:	C-Band (ITU-T G.694.1 compliant) (See Ordering Information)
Power:	
1310nm FP (Standard):	-7dBm ±1dBm
1550nm & CWDM DFB:	0dBm ±1dBm
DWDM DFB:	+7dBm ±1dBm

Optical Input:

Number of Inputs:	1
Standards:	OC-12/STM-4
Connector:	Female SC/PC, ST/PC or FC/PC
Return Loss:	> 25dB
Wavelength:	1270nm to 1610nm
Maximum Input Power:	
Standard:	-1dBm
Optical Sensitivity:	
Standard:	-28dBm

Electrical:

Voltage:	+12V DC
Power:	10W (non DWDM) 13W (DWDM)

Physical:

Number of Slots:	2

Compliance:

Electrical Safety:	CSA Listed to CSA C22.2 No. 60065-03IEC 60065-(2001-12) 7th EditionComplies with CE Low voltage directive 93/68/EEC
Laser Safety:	Complies with 24 CFR 1040.10 and 1040.11 except for deviations pursuant to LN No. 50, dated July 26, 2001Complies with IEC 60825-1, Am. 2
EMI/RFI:	Complies with FCC regulations for class A devices Complies with EU EMC directive 89/336/EEC

Ordering Information

7707VR13-2-OC12 Dual SDI/ASI/SDTi + Ethernet SONET/SDH Fiber Receiver, 1310nm FP laser, VistaLINK®

7707VR15-2-OC12 Dual SDI/ASI/SDTi + Ethernet SONET/SDH Fiber Receiver, 1550nm DFB laser (0dBm), VistaLINK®

For CWDM applications please refer to the end of the fiber section for details

7707VRxx-2-OC12
Dual SDI/ASI/SDTi + Ethernet SONET/SDH Fiber Receiver, CWDM DFB laser, VistaLINK®

For DWDM applications please refer to the end of the fiber section for details

7707VRDxxx-2-OC12
Dual SDI/ASI/SDTi + Ethernet SONET/SDH Fiber Receiver, DWDM DFB laser, VistaLINK®

Ordering Options Rear Plate and Fiber Connector must be specified at time of order
Eg: Model +SC +3RU

Rear Plate Suffix

+3RU	3RU Rear Plate for use with 7700FR-C Multiframe
+1RU	1RU Rear Plate for use with 7701FR Multiframe
+SA	Standalone Enclosure Rear Plate

Connector Suffix

+SC	SC/PC
+ST	ST/PC
+FC	FC/PC

Enclosures

7700FR-C	3RU Multiframe which holds up to 15 single slot modules
7701FR	1RU Multiframe which holds up to 3 single or dual slot modules
S7701FR	Standalone enclosure

7705IFTA

70/140MHz IF Fiber Transmitter

The 7705IFTA is a fiber optic transmitter for 70/140MHz IF signals. The 7705IFTA accepts one 70/140MHz coaxial input and provides a fiber optic output signal at 1310nm. An additional electrical output is also provided for monitoring or further signal distribution.

The 7705IFTA occupies one card slot and can be housed in a 1RU frame which will hold up to 3 modules, a 3RU frame which will hold up to 15 modules or a standalone enclosure which will hold 1 module.

Features & Benefits

- 30-200MHz bandwidth
- Wide dynamic range RF input (-5 to -65dBm)
- Protocol transparent - transmits all video, audio and data modulation formats
- Supports manual and automatic gain control on IF input
- Wide AGC hold range (45dB) using 7705IFTA + 7705IFRA
- Additional electrical output for monitoring or distribution
- Available with BNC or F-Type connector options
- Supports single-mode and multi-mode fiber optic cable
- Available in SC/PC, ST/PC, FC/PC and APC connector options
- Fully hot-swappable from front of frame

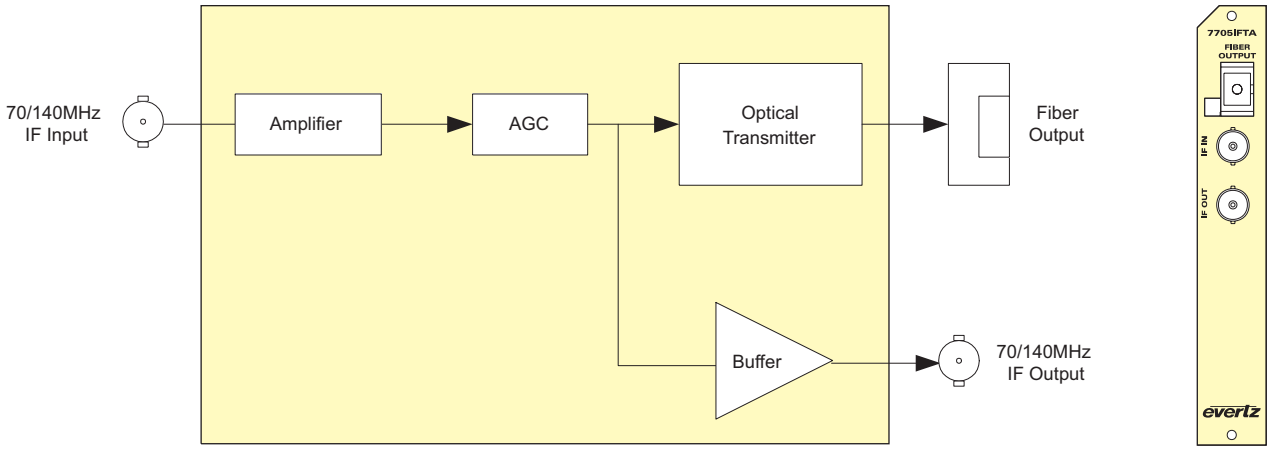

Specifications

RF Input:

Connector:	1 BNC per IEC 60169-8 Amendment 2 (F-type optional)
I/O Impedance:	75Ω (50Ω optional) (See Ordering Information)
Return Loss:	18dB (min)
Frequency Range:	30MHz-200MHz
Input Power Range:	-5 to -65dBm
AGC Hold Range:	-10 to -35dBm

IF Monitoring Output:

Connector:	1 BNC per IEC 60169-8 Amendment 2 (F-type optional)
I/O Impedance:	75Ω (50Ω optional) (See Ordering Information)
Return Loss:	18dB (min)
Frequency Range:	30MHz-200MHz
Flatness:	±1dB @ 30MHz-200MHz ±.2dB @ 36MHz BW
Output Signal Level:	
AGC mode:	-20dBm constant (within AGC range -10 to -35dBm total RF input power)
Manual mode:	(Input signal) +15dB
Intermodulation Products:	-50dBc (-10dBm RF in, ACG mode)
Carrier to Noise:	37dB @ any 36MHz BW

Optical Output:

Number of outputs:	1
Connector:	Female SC/PC, ST/PC, FC/PC, SC/APC, FC/APC
Operating Wavelength:	1310nm
Output Power:	0dBm ±1dBm

Electrical:

Voltage:	+12V DC
Power:	4W

Physical:

Number of slots:	1

Ordering Information

7705IFTA13	70/140MHz IF Fiber Transmitter

Note: 75Ω I/O impedance ships standard

Ordering Options Rear Plate and Fiber Connector must be specified at time of order
Eg. Model +3RU +SC

Rear Plate Suffix

+3RU	3RU Rear Plate for use with 7700FR-C Multiframe
+1RU	1RU Rear Plate for use with 7701FR Multiframe
+SA	Standalone Enclosure Rear Plate

Impedance Suffix

+50	50Ω I/O Impedance

Connector Suffix

+SC	SC/PC
+AP+SC	SC/APC (Angle polished)
+ST	ST/PC
+FC	FC/PC
+AP+FC	FC/APC (Angle polished)
+F75	75Ω, F-Type rear connector

Enclosures

7700FR-C	3RU Multiframe, which holds up to 15 single slot modules
7701FR	1RU Multiframe, which holds up to 3 single or dual slot modules
S7701FR	Standalone enclosure

The 7705IFRA is a fiber optic receiver for 70/140 MHz IF signals. The 7705IFRA accepts a fiber optic input from the companion 7705IFTA and provides two 70/140 MHz IF output signals.

The 7705IFRA occupies one card slot and can be housed in a 1RU frame which will hold up to 3 modules, a 3RU frame which will hold up to 15 modules or a standalone enclosure which will hold 1 module.

Features & Benefits

- 30-200MHz bandwidth
- Protocol transparent - receives all video, audio and data modulation formats
- Supports manual & automatic gain control (AGC)
- Wide AGC hold range (45dB) using 7705IFTA + 7705IFRA
- Two IF outputs for extra signal distribution or monitoring functions
- Available with BNC or F-Type connector options
- Wide range optical input (1270nm to 1610nm)
- IF output power independent of optical loss (within AGC range)
- Supports single-mode and multi-mode fiber optic cable
- Available in SC/PC, ST/PC, FC/PC & APC connector options
- Fully hot-swappable from front of frame

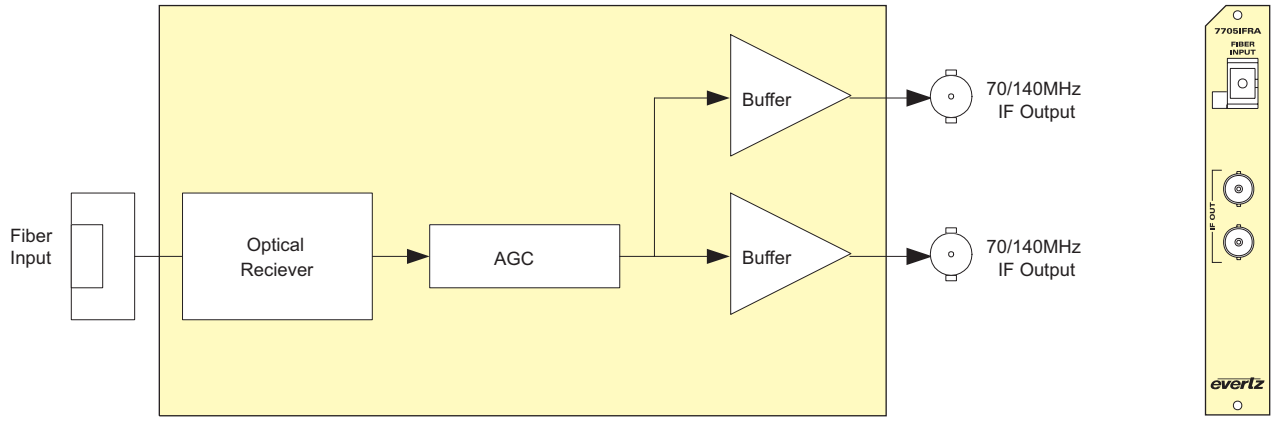

Specifications

RF Output:

Number of Outputs:	2
Connector:	BNC per IEC 60169-8 Amendment 2 (F-type optional)
I/O Impedance:	75Ω (50Ω optional) (See Ordering Information)
Return Loss:	18dB (min)
Frequency Range:	30MHz-200MHz
Flatness:	±1dB @ 30 MHz-200MHz ±.2dB @ 36MHz BW
Carrier to Noise:	-37dB @ 36MHz BW
Output Signal Level:	
AGC:	-10dBm constant (within AGC range)
Manual:	-5 to -65 (depends on RF input level & optical loss)
Intermodulation Products:	-50dBc (-10dBm at IFTA input & 3dB optical loss)

Optical Input:

Number of Inputs:	1
Connector:	Female SC/PC, ST/PC, FC/PC, SC/APC, FC/APC
Operating Wavelength:	1270nm-1610nm
Optical Input Power:	+3dBm (max)
Optical Sensitivity:	-14dBm @35dB C/N @36MHz BW
Optical Attenuation:	
AGC Hold Range:	10dB optical

Electrical:

Voltage:	+12V DC
Power:	5W

Physical:

Number of slots:	1

Ordering Information

7705IFRA13	70/140MHz IF Fiber Receiver

Note: 75Ω I/O impedance ships standard

Ordering Options Rear Plate and Fiber Connector must be specified at time of order
Eg. Model +3RU +SC

Rear Plate Suffix

+3RU	3RU Rear Plate for use with 7700FR-C Multiframe
+1RU	1RU Rear Plate for use with 7701FR Multiframe
+SA	Standalone Enclosure Rear Plate

Impedance Suffix

+50	50Ω I/O Impedance

Connector Suffix

+SC	SC/PC
+AP+SC	SC/APC (Angle polished)
+ST	ST/PC
+FC	FC/PC
+AP+FC	FC/APC (Angle polished)
+F75	75Ω, F-Type rear connector

Enclosures

7700FR-C	3RU Multiframe, which holds up to 15 single slot modules
7701FR	1RU Multiframe, which holds up to 3 single or dual slot modules
S7701FR	Standalone enclosure

7705LTA

L-Band Satellite Fiber Transmitter

The 7705LTA is a fiber optic transmitter for L-Band satellite signals. The 7705LTA accepts one L-Band coaxial input and provides a fiber optic output signal at 1310nm. A buffered output is also provided for monitoring or further signal distribution.

The 7705LTA occupies one card slot and can be housed in either a 1RU frame which will hold up to 3 modules, a 3RU frame which will hold up to 15 modules or a standalone enclosure which will hold 1 module.

Features & Benefits

- Broadband operation - 950 to 2250MHz
- Wide dynamic range RF input (-20 to -65dBm)
- Operation to 40km
- Protocol transparent - transmits all video, audio and data modulation formats
- Supports manual and automatic gain control (AGC)
- Wide AGC hold range (50dB) using 7705LTA + 7705LR
- Additional L-Band BNC output for monitoring or distribution
- LNB power at +13 or +17 V DC with built-in current limiting
- Available with BNC or F-Type connector options
- Supports single-mode and multi-mode fiber optic cable
- Available with SC/PC, ST/PC, FC/PC and APC connector options
- Fully hot-swappable from front of frame

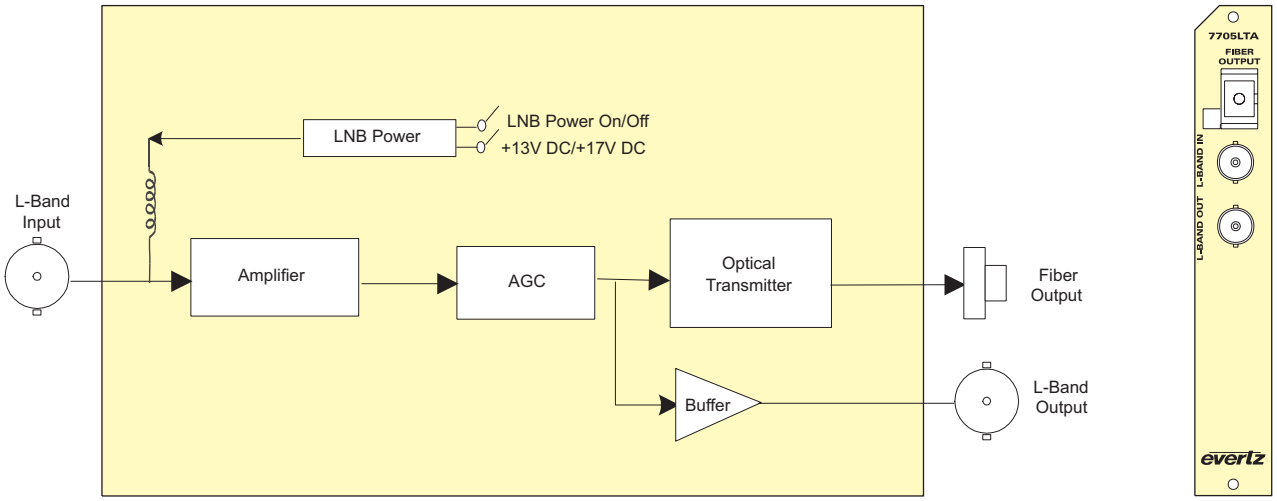

Specifications

RF Input:

Connector:	1 BNC per IEC 60169-8 Amendment 2 (F-type optional)
I/O Impedance:	75Ω (50Ω optional) (See Ordering Information)
Return Loss:	> 10dB
Frequency Range:	950MHz-2250MHz
Input Power Range:	-20 to -65dBm
AGC Hold Range:	-20 to -50dBm

RF Monitoring Output:

Number of outputs:	1
Connector:	BNC per IEC 60169-8 Amendment 2 (F-type optional)
I/O Impedance:	75Ω (50Ω optional)
Return Loss:	> 10dB
Frequency Range:	950MHz-2250MHz
Flatness:	±1.5dB @ 1000MHz-2250MHz ±0.25dB @ any 36MHz BW
Output Signal Level:	
AGC Mode:	-20dBm constant (within AGC range)
Manual Mode:	(Input Level) +25dB gain (-5dB)
Intermodulation Products:	-55dBc (AGC mode, RF input - 20dBm)
Carrier to Noise:	37dB @ any 36MHz BW

Optical Output:

Number of outputs:	1
Connector:	Female SC/PC, ST/PC, FC/PC, SC/APC, FC/APC
Operating Wavelength:	1310nm
Optical Power:	0dBm ±1dBm

Electrical:

Voltage:	+12V DC
Power:	4W

Physical:

Number of slots:	1

Ordering Information

7705LTA13	L-Band Satellite Fiber Transmitter

Note: 75Ω I/O impedance ships standard

Ordering Options Rear Plate and Fiber Connector must be specified at time of order
Eg. Model +3RU +SC

Rear Plate Suffix

+3RU	3RU Rear Plate for use with 7700FR-C Multiframe
+1RU	1RU Rear Plate for use with 7701FR Multiframe
+SA	Standalone Enclosure Rear Plate

Impedance Suffix

+50	50Ω I/O Impedance

Connector Suffix

+SC	SC/PC
+AP+SC	SC/APC (Angle polished)
+ST	ST/PC
+FC	FC/PC
+AP+FC	FC/APC (Angle polished)
+F75	75Ω, F-Type rear connector

Enclosures

7700FR-C	3RU Multiframe, which holds up to 15 single slot modules
7701FR	1RU Multiframe, which holds up to 3 single or dual slot modules
S7701FR	Standalone enclosure

The 7705LR is a fiber optic receiver for L-Band satellite signals. The 7705LR accepts a fiber optic input from the 7705LTA and provides two L-Band RF output signals.

The 7705LR occupies one card slot and can be housed in either a 1RU frame, which will hold up to 3 modules, a 3RU frame which will hold up to 15 modules or a standalone enclosure which will hold 1 module.

Features & Benefits

- Broadband operation - 950 to 2250MHz
- Supports manual and automatic gain control (AGC)
- Wide AGC hold range (50dB) using 7705LTA + 7705LR
- Protocol transparent - receives all video, audio and data modulation formats
- Two L-Band RF outputs for extra signal distribution or monitoring functions
- RF output independent of optical loss (within AGC range)
- Available with BNC or F-Type connector options
- Supports single-mode and multi-mode fiber optic cable
- Available in SC/PC, ST/PC, FC/PC and APC connector options
- Fully hot-swappable from front of frame

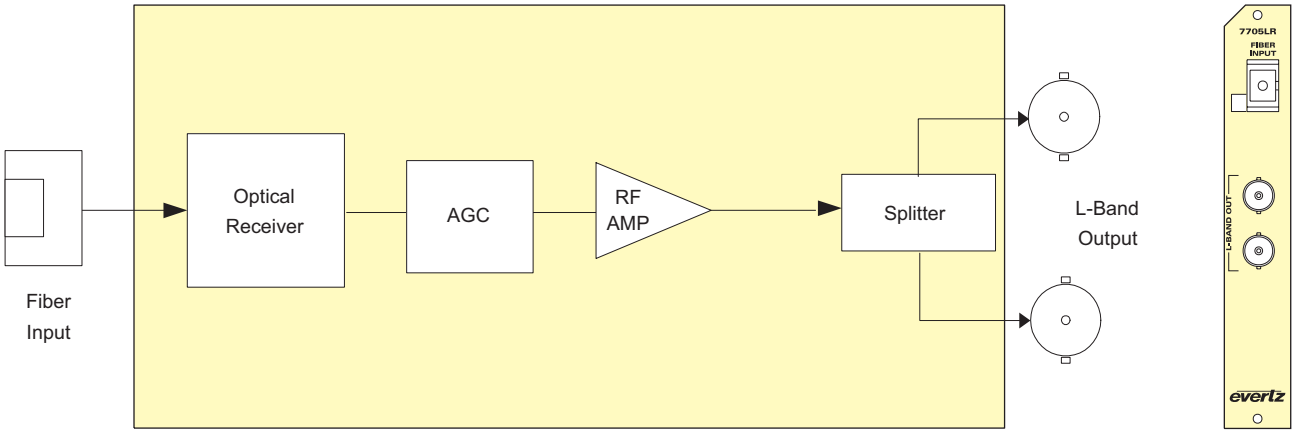

Specifications

RF Output:
Number of outputs: 2
Connector: BNC per IEC 60169-8 Amendment 2 (F-type optional)
I/O Impedance: 75Ω (50Ω optional)
Return Loss: > 10dB
Frequency Range: 950MHz-2250MHz
Flatness: ±1.5dB (max) @ 950MHz-2250MHz
±0.25dB @ any 36MHz BW
Output Signal Level:
AGC Mode: -20dBm constant (within AGC range)
Manual Mode: -20 to -65dBm (depends on RF level and optical loss)
Intermodulation Products:
-55dBc (-20dBm RF input to TX, 1m fiber, AGC mode on TX & RX)
Carrier to Noise: 37dB @ any 36MHz BW

Noise Figure: (AGC mode on 7705LTA and 7705LR)
0dB Optical Loss: 7dB
5dB Optical Loss: 14dB
Signal to Noise: 55dB

Optical Input:
Number of inputs: 1
Connector: Female SC/PC, ST/PC, FC/PC, SC/APC, FC/APC
Operating Wavelength:
1270nm-1610nm
Optical Input Power: +3dBm (max)
Optical Sensitivity: -14dBm @ 35dB S/N

Optical Attenuation:
AGC Hold Range: 10dB optical

Electrical:
Voltage: +12V DC
Power: 4W
EMI/RFI: Complies with FCC Part 15, Class A
EU EMC Directive

Physical:
Number of slots: 1

Ordering Information

7705LR	L-Band Satellite Fiber Receiver

Note: 75Ω I/O impedance ships standard

Ordering Options Rear Plate and Fiber Connector must be specified at time of order
Eg. Model +3RU +SC

Rear Plate Suffix

+3RU	3RU Rear Plate for use with 7700FR-C Multiframe
+1RU	1RU Rear Plate for use with 7701FR Multiframe
+SA	Standalone Enclosure Rear Plate

Impedance Suffix

+50	50Ω I/O Impedance

Connector Suffix

+SC	SC/PC
+AP+SC	SC/APC (Angle polished)
+ST	ST/PC
+FC	FC/PC
+AP+FC	FC/APC (Angle polished)
+F75	75Ω, F-Type rear connector

Enclosures

7700FR-C	3RU Multiframe, which holds up to 15 single slot modules
7701FR	1RU Multiframe, which holds up to 3 single or dual slot modules
S7701FR	Standalone enclosure

7707IFTA

70/140MHz IF Fiber Transmitter with VistaLINK® Monitoring

The 7707IFTA is a VistaLINK® capable fiber optic transmitter for 70/140MHz IF signals. The 7707IFTA accepts one 70/140MHz coaxial input and provides a fiber optic output signal at 1310nm, 1550nm, CWDM or DWDM wavelengths. An IF BNC output is also provided for monitoring or further signal distribution. Monitoring and control of card status is provided locally at the card edge and remotely via VistaLINK®.

The 7707IFTA occupies one card slot and can be housed in either a 1RU frame which will hold up to 3 modules, a 3RU frame which will hold up to 15 modules or a standalone enclosure which will hold 1 module.

Features & Benefits

- 30-200MHz bandwidth
- Wide dynamic range RF input (-5 to -65dBm)
- Protocol transparent - transmits all video, audio and data modulation formats
- Supports manual and automatic gain control on IF input
- Wide AGC hold range (45dB) using 7707IFTA + 7707IFRA
- Additional IF BNC output for monitoring or distribution
- Available with BNC or F-Type connector options
- Available with output wavelengths of 1310nm, 1550nm, CWDM (ITU-T G.694.2 compliant) and DWDM (ITU-T G.694.1 compliant)
- Supports single-mode and multi-mode fiber optic cable
- Available in SC/PC, ST/PC, FC/PC and APC connector options
- Fully hot-swappable from front of frame
- Comprehensive signal and card status monitoring via four digit card edge display or remotely through SNMP and VistaLINK®
- VistaLINK® capability is available when modules are used with the 3RU 7700FR-C frame and a 7700FC VistaLINK® Frame Controller module in slot 1 of the frame

APPLICATION	OPTICAL/LINK BUDGET	TRANSMITTER SIDE		RECEIVER SIDE		DESCRIPTION
		ORDERING PRODUCT INFO	TX POWER	ORDERING PRODUCT INFO	RX SENSITIVITY	
ONE SIGNAL PER FIBER						
Short to Medium Haul	14dB/40km	**7707IFTA13**	0dBm	**7707IFRA**	-14dBm	1310nm FP laser on Tx
Medium Haul	16dB/45km	**7707IFTA13L**	+2dBm	**7707IFRA**	-14dBm	1310nm DFB laser on Tx
Long Haul	16dB/64km	**7707IFTA15**	+2dBm	**7707IFRA**	-14dBm	1550nm DFB laser on Tx
Long Haul	25dB/71km	**7707IFTA13L**	+2dBm	**7707IFRA-H**	-23dBm	1310nm DFB laser on Tx, High Sensitivity RX
Long Haul	25dB/100km	**7707IFTA15**	+2dBm	**7707IFRA-H**	-23dBm	1550nm DFB laser on Tx, High Sensitivity RX
MULTI-SIGNAL PER FIBER (WAVELENGTH MUX/DEMUX)						
Medium Haul	12.5dB/50km*	**7707IFTAxx**	+2dBm	**7707IFRA**	-14dBm	1470nm-1610nm CWDM DFB laser on Tx, with 8 Ch CWDM Mux/Demux*
Long Haul	21.5dB/86km*	**7707IFTAxx**	+2dBm	**7707IFRA-H**	-23dBm	1470nm-1610nm CWDM DFB laser on Tx, High Sensitivity RX, 8 Ch CWDM Mux/Demux*
Long Haul	16dB/70km**	**7707IFTADxxx**	+7dBm	**7707IFRA**	-14dBm	DWDM DFB laser on Tx, with 8 Ch DWDM Mux/Demux**
Long Haul	25dB/100km**	**7707IFTADxxx**	+7dBm	**7707IFRTA-H**	-23dBm	DWDM DFB laser on Tx, High Sensitivity RX, 8 Ch DWDM Mux/Demux**

Fiber loss = 0.35/0.25dB per km @ 1310nm/1550nm
***Assumes 8 Channel upper band CWDM Mux/Demux loss of 3.5dB**
****Assumes 8 Channel DWDM Mux/Demux loss of 5dB**

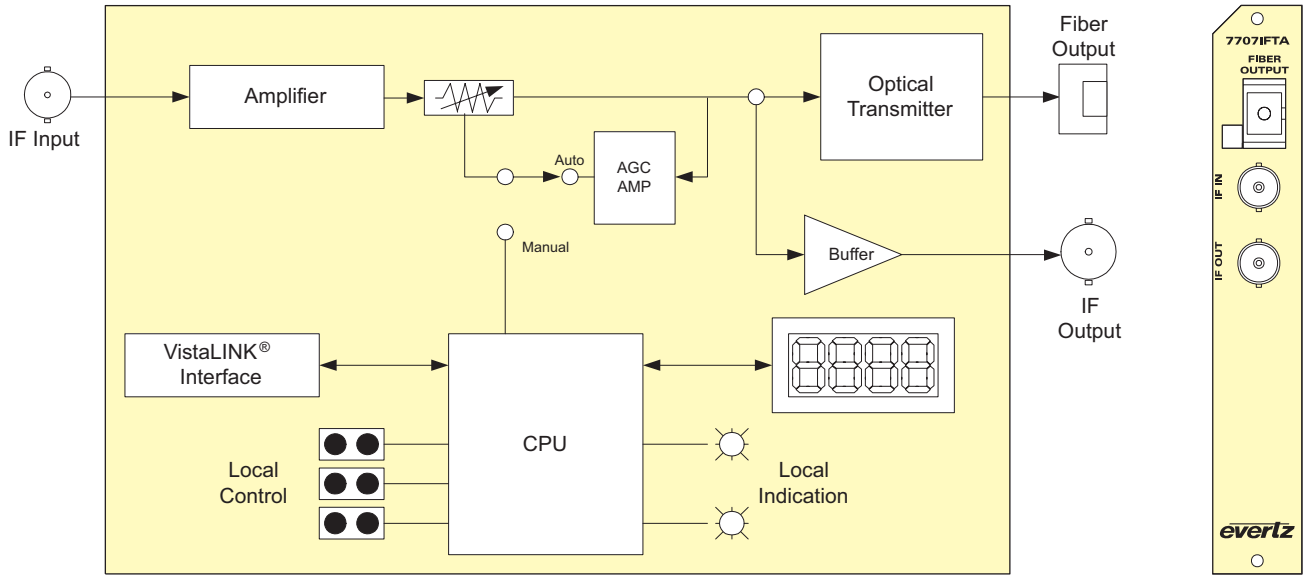

Specifications

RF Input:
Connector: 1 BNC per IEC 60169-8 Amendment 2 (F-type optional)
I/O Impedance: 75Ω (50Ω optional) (See Ordering Information)
Return Loss: 18dB (min)
Frequency Range: 30MHz-200MHz
Input Power Range: -5 to -65dBm
AGC Hold Range: -10 to -35dBm

IF Monitoring Output:
Connector: 1 BNC per IEC 60169-8 Amendment 2 (F-type optional)
I/O Impedance: 75Ω (50Ω optional) (See Ordering Information)
Return Loss: 18dB (min)
Frequency Range: 30MHz-200MHz
Flatness: ±1dB @ 30MHz-200MHz
±.2dB @ 36MHz BW

Output Signal Level:
AGC mode: -20dBm constant (within AGC range -10 to -35dBm total RF input power)
Manual mode: (Input signal) + (manual Gain setting)
Intermodulation Products: -50dBc (-10dBm RF in, ACG mode)
Carrier to Noise: 37dB @ 36MHz BW

Optical Output:
Number of outputs: 1
Connector: Female SC/PC, ST/PC, FC/PC, SC/APC, FC/APC
Operating Wavelengths:
Standard: 1310nm, 1550nm (nominal)
CWDM: 1270nm to 1610nm
DWDM: C-Band (ITU G.694.1 compliant)

Output Power:
1310nm FP: 0dBm ±1dBm
1310nm, 1550nm & CWDM DFB: +2dBm ±1dBm
DWDM DFB: +7dBm ±1dBm

Electrical:
Voltage: +12V DC
Power: 6W
9W (DWDM)
EMI/RFI: Complies with FCC Part 15, Class A
EU EMC Directive

Physical:
Number of slots: 1

Ordering Information

70/140MHz IF Fiber Transmitter, with VistaLINK®

(Replaces the 7707IFT and offers improved performance and wider operating range)

Note: 75Ω I/O impedance ships standard

7707IFTA13 1310nm FP Laser, Short to Medium Haul
7707IFTA13L 1310nm DFB Laser, Medium Haul
7707IFTA15 1550nm DFB Laser, Long Haul

For CWDM, please refer to the end of the fiber section for ordering information
7707IFTAxx 70/140 MHz IF Fiber Transmitter, CWDM wavelength, with VistaLINK®

For DWDM, please refer to the end of the fiber section for ordering information
7707IFTADxxx 70/140 MHz IF Fiber Transmitter, DWDM wavelength, with VistaLINK®

Ordering Options Rear Plate and Fiber Connector must be specified at time of order
Eg. Model +3RU +SC

Rear Plate Suffix
+3RU 3RU Rear Plate for use with 7700FR-C Multiframe
+1RU 1RU Rear Plate for use with 7701FR Multiframe
+SA Standalone Enclosure Rear Plate

Impedance Suffix
+50 50Ω I/O Impedance

Connector Suffix
+SC SC/PC
+AP+SC SC/APC (Angle polished available with 7707IFTA13 only)
+ST ST/PC
+FC FC/PC
+AP+FC FC/APC (Angle polished available with 7707IFTA13 only)
+F75 75Ω, F-Type rear connector

Enclosures
7700FR-C 3RU Multiframe, which holds up to 15 single slot modules
7701FR 1RU Multiframe, which holds up to 3 single or dual slot modules
S7701FR Standalone enclosure

7707IFRA

70/140MHz IF Fiber Receiver with VistaLINK® Monitoring

The 7707IFRA is a VistaLINK® capable fiber optic receiver for 70/140 MHz IF signals. The 7707IFRA accepts a fiber optic input from the companion 7707IFTA and provides two 70/140 MHz IF output signals via BNCs. Monitoring and control of card status and parameters is provided locally at the card edge and remotely via VistaLINK® capability.

The 7707IFRA occupies one card slot and can be housed in either a 1RU frame which will hold up to 3 modules, a 3RU frame which will hold up to 15 modules or a standalone enclosure which will hold 1 module.

Features & Benefits

- 30-200MHz bandwidth
- Protocol transparent - receives all video, audio and data modulation formats
- Supports manual and automatic gain control (AGC)
- Wide AGC hold range (45dB) using 7707IFTA + 7707IFRA
- Two IF outputs for extra signal distribution or monitoring functions
- IF output power independent of optical loss (within AGC range)
- Available with BNC or F-Type connector options
- Wide range optical input (1270nm to 1610nm)
- Supports single-mode and multi-mode fiber optic cable
- Available in SC/PC, ST/PC, FC/PC and APC connector options
- Fully hot-swappable from front of frame
- Comprehensive signal and card status monitoring via four digit card edge display or remotely through SNMP and VistaLINK®
- VistaLINK® capability is available when modules are used with the 3RU 7700FR-C frame and a 7700FC VistaLINK® Frame Controller module in slot 1 of the frame

7707IFRA Application Configurations

APPLICATION	OPTICAL/LINK BUDGET	TRANSMITTER SIDE		RECEIVER SIDE		DESCRIPTION
		ORDERING PRODUCT INFO	TX POWER	ORDERING PRODUCT INFO	RX SENSITIVITY	
ONE SIGNAL PER FIBER						
Short to Medium Haul	14dB/40km	**7707IFTA13**	0dBm	**7707IFRA**	-14dBm	1310nm FP laser on Tx
Medium Haul	16dB/45km	**7707IFTA13L**	+2dBm	**7707IFRA**	-14dBm	1310nm DFB laser on Tx
Long Haul	16dB/64km	**7707IFTA15**	+2dBm	**7707IFRA**	-14dBm	1550nm DFB laser on Tx
Long Haul	25dB/71km	**7707IFTA13L**	+2dBm	**7707IFRA-H**	-23dBm	1310nm DFB laser on Tx, High Sensitivity RX
Long Haul	25dB/100km	**7707IFTA15**	+2dBm	**7707IFRA-H**	-23dBm	1550nm DFB laser on Tx, High Sensitivity RX
MULTI-SIGNAL PER FIBER (WAVELENGTH MUX/DEMUX)						
Medium Haul	12.5dB/50km*	**7707IFTAxx**	+2dBm	**7707IFRA**	-14dBm	1470nm-1610nm CWDM DFB laser on Tx, with 8 Ch CWDM Mux/Demux*
Long Haul	21.5dB/86km*	**7707IFTAxx**	+2dBm	**7707IFRA-H**	-23dBm	1470nm-1610nm CWDM DFB laser on Tx, High Sensitivity RX, 8 Ch CWDM Mux/Demux*
Long Haul	16dB/70km**	**7707IFTADxxx**	+7dBm	**7707IFRA**	-14dBm	DWDM DFB laser on Tx, with 8 Ch DWDM Mux/Demux**
Long Haul	25dB/100km**	**7707IFTADxxx**	+7dBm	**7707IFRTA-H**	-23dBm	DWDM DFB laser on Tx, High Sensitivity RX, 8 Ch DWDM Mux/Demux**

Fiber loss = 0.35/0.25dB per km @ 1310nm/1550nm
***Assumes 8 Channel upper band CWDM Mux/Demux loss of 3.5dB**
****Assumes 8 Channel DWDM Mux/Demux loss of 5dB**

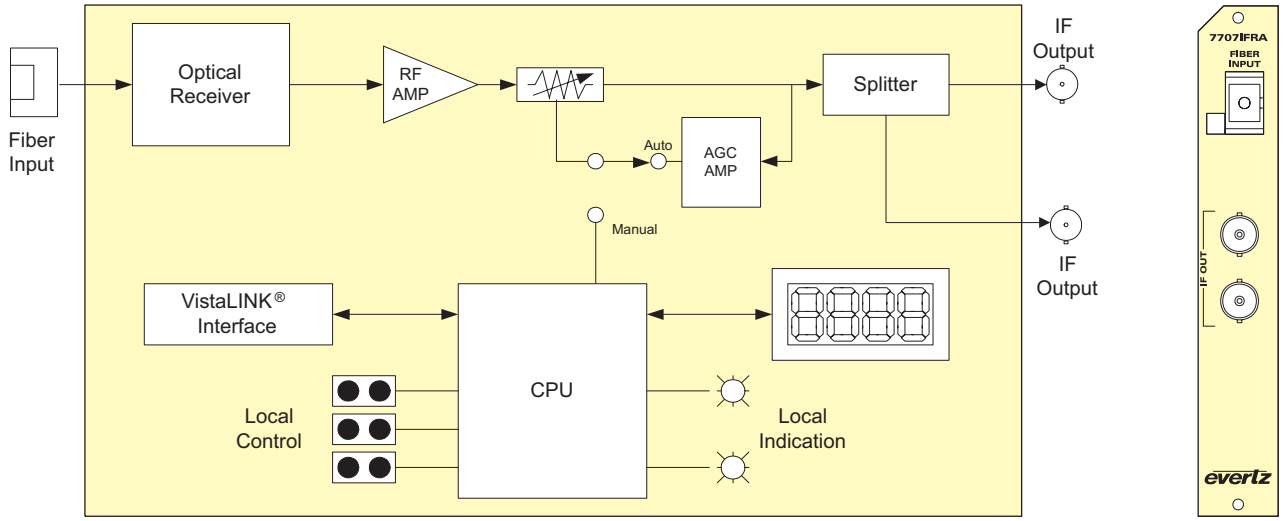

Specifications

IF Output:

Connector:	2 BNC per IEC 60169-8 Amendment 2
I/O Impedance:	75Ω (50Ω optional) (See Ordering Information)
Return Loss:	18dB (min)
Frequency Range:	30MHz-200MHz
Flatness:	±1dB @ 30 MHz-200MHz ±0.2dB @ 36MHz BW
Carrier to Noise:	37dB @ 36MHz BW
Output Signal Level:	
AGC mode:	-10dBm constant (within AGC range)
Manual mode:	-5 to -65 (depends on RF input level, optical loss & gain setting)
Intermodulation Products:	-50dBc (-10dBm at IFTA input & 3dB optical loss)

Optical Input:

Number of Inputs:	1
Connector:	Female SC/PC, ST/PC, FC/PC, SC/APC, FC/APC
Operating Wavelength:	1270nm - 1610nm
Maximum Input Power:	
Standard Version:	+3dBm
-H Version:	-7dBm
Optical Sensitivity:	
Standard Version:	-14dBm @35dB C/N @36MHz BW
-H Version:	-23dBm @35dB C/N @36MHz BW -29dBm @25dB C/N @36MHz BW
Optical Attenuation:	
AGC Hold range:	10dB optical

Electrical:

Voltage:	+12V DC
Power:	5W
EMI/RFI:	Complies with FCC Part 15, Class A EU EMC Directive

Physical:

Number of slots:	1

Ordering Information

(Replaces the 7707IFR and offers improved performance and wider operating range)

Note: 75Ω I/O impedance ships standard

7707IFRA	70/140MHz IF Fiber Receiver, VistaLINK® Monitoring
7707IFRA-H	70/140MHz IF High Sensitivity Fiber Receiver, VistaLINK® Monitoring

Ordering Options Rear Plate and Fiber Connector must be specified at time of order
Eg. Model +3RU +SC

Impedance Suffix

+50	50Ω I/O Impedance

Connector Suffix

+SC	SC/PC
+AP+SC	SC/APC (Angle polished)
+ST	ST/PC
+FC	FC/PC
+AP+FC	FC/APC (Angle polished)
+F75	75Ω, F-Type rear connector

Rear Plate Suffix

+3RU	3RU Rear Plate for use with 7700FR-C Multiframe
+1RU	1RU Rear Plate for use with 7701FR Multiframe
+SA	Standalone Enclosure Rear Plate

Enclosures

7700FR-C	3RU Multiframe, which holds up to 15 single slot modules
7701FR	1RU Multiframe, which holds up to 3 single or dual slot modules
S7701FR	Standalone enclosure

7707LR & 7707LR-WB

L-Band Fiber Receiver with VistaLINK® Monitoring

The 7707LR and 7707LR-WB are VistaLINK® capable fiber optic receivers for L-Band Satellite signals. The 7707LR-WB offers extended bandwidth from 250 to 2250MHz vs 950 to 2250MHz for the 7707LR version. Both 7707LR and 7707LR-WB accept a fiber optic input from the companion L-Band transmitters and provide L-Band RF output signals. Monitoring and control of card status is provided locally at the card edge and remotely via VistaLINK®.

The 7707LR and 7707LR-WB occupy one card slot and can be housed in either a 1RU frame which will hold up to 3 modules, a 3RU frame which will hold up to 15 modules, or a standalone enclosure which will hold 1 module.

Features & Benefits

- Band operation:
  - 7707LR: 950 to 2250MHz
  - 7707LR-WB: 250 to 2250MHz
- Protocol transparent - receives all video, audio and data modulation formats
- Supports manual and automatic gain control (AGC)
- Wide AGC hold range (50dB) using 7707LTA/LTA-WB + 7707LR/LR-WB
- Two L-Band RF outputs (7707LR only) for extra signal distribution or monitoring functions
- RF output independent of optical loss (within AGC range)
- Available with BNC or F-Type connector options
- Wide range optical input (1270nm to 1610nm)
- Supports single-mode and multi-mode fiber optic cable
- Available in SC/PC, ST/PC, FC/PC and APC connector options
- Fully hot-swappable from front of frame
- Comprehensive signal and card status monitoring via four digit card edge display or remotely through SNMP and VistaLINK®
- VistaLINK® capability is available when modules are used with the 3RU 7700FR-C frame and a 7700FC VistaLINK® Frame Controller module in slot 1 of the frame

7707LR & 7707LR-WB Application Configurations

APPLICATION	OPTICAL/LINK BUDGET	TRANSMITTER SIDE		RECEIVER SIDE		DESCRIPTION
		ORDERING PRODUCT INFO	TX POWER	ORDERING PRODUCT INFO	RX SENSITIVITY	
ONE SIGNAL PER FIBER						
Short to Medium Haul	14dB/40km	**7707LTA13**	0dBm	**7707LR**	-14dBm	1310nm FP laser on Tx
Medium Haul	16dB/45km	**7707LTA13L**	+2dBm	**7707LR**	-14dBm	1310nm DFB laser on Tx
Long Haul	16dB/64km	**7707LTA15**	+2dBm	**7707LR**	-14dBm	1550nm DFB laser on Tx
Long Haul	25dB/71km	**7707LTA13L**	+2dBm	**7707LR-H**	-23dBm	1310nm DFB laser on Tx, High Sensitivity RX
Long Haul	25dB/100km	**7707LTA15**	+2dBm	**7707LR-H**	-23dBm	1550nm DFB laser on Tx, High Sensitivity RX
MULTI-SIGNAL PER FIBER (WAVELENGTH MUX/DEMUX)						
Medium Haul	12.5dB/50km	**7707LTAxx**	+2dBm	**7707LR**	-14dBm	1470nm-1610nm CWDM DFB laser on Tx, with 8 Ch CWDM Mux/Demux*
Long Haul	21.5dB/86km*	**7707LTAxx**	+2dBm	**7707LR-H**	-23dBm	1470nm-1610nm CWDM DFB laser on Tx, High Sensitivity RX, 8 Ch CWDM Mux/Demux*
Long Haul	16dB/64km**	**7707LTADxxx**	+7dBm	**7707LR**	-14dBm	DWDM DFB laser on Tx, with 8 Ch DWDM Mux/Demux**
Long Haul	25dB/100km**	**7707LTADxxx**	+7dBm	**7707LR-H**	-23dBm	DWDM DFB laser on Tx, High Sensitivity RX, 8 Ch DWDM Mux/Demux**

Fiber loss = 0.35/0.25dB per km @ 1310nm/1550nm
***Assumes 8 Channel upper band CWDM Mux/Demux loss of 3.5dB**
****Assumes 8 Channel DWDM Mux/Demux loss of 5dB**

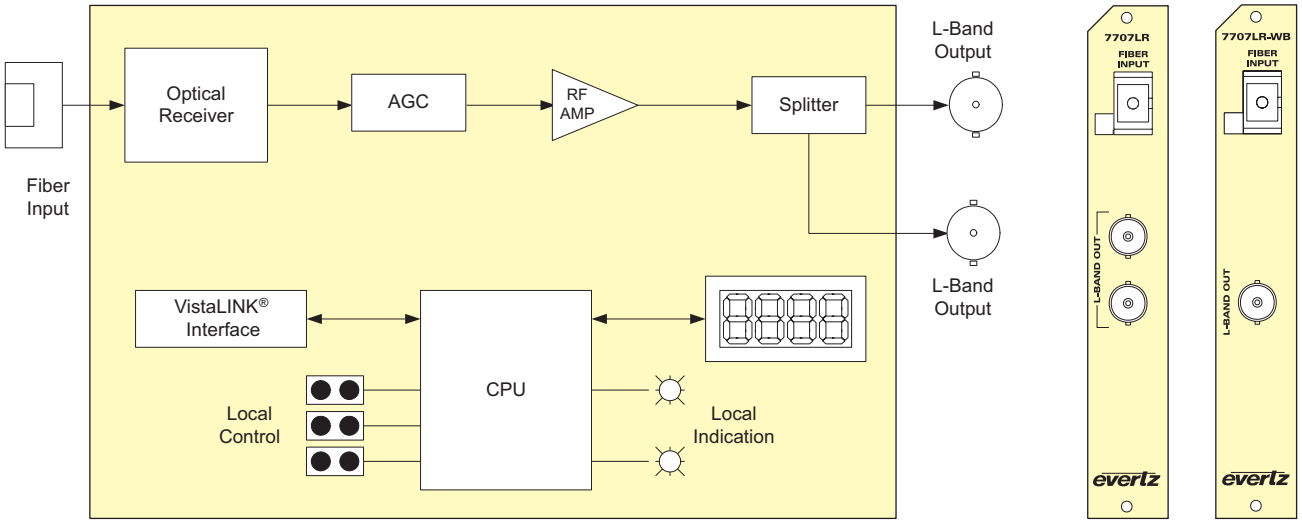

Specifications

RF Outputs:
Number of Outputs: 2 (7707LR)
1 (7707LR-WB)
Connector: 2 BNCs (F-type optional)
I/O Impedance: 75Ω (50Ω optional) (See Ordering Information)
Return Loss: > 10dB
Frequency Range: 950MHz-2250MHz (7707LR)
250MHz-2250MHz (7707LR-WB)
Flatness: ±1.5dB @ 950MHz-2250MHz (7707LR)
±2dB @ 250MHz-2250MHz (7707LR-WB)
±0.25dB @ any 36MHz BW

Output Signal Level:
AGC Mode: -20dBm constant (within AGC range)
Manual Mode: -20 to -65dBm (depends on RF level and optical loss)
OIP3: +10dBm (-40dBm input level)
Intermodulation Products:
-55dBc (-20dBm RF in on TX, 1m fiber, AGC mode on TX & RX)

Carrier to Noise: 37dB @ any 36MHz BW
Noise Figure: 20dB/32dB (minimum/maximum optical loss)
Signal to Noise: > 55dB

Optical Input:
Number of inputs: 1
Connector: Female SC/PC, ST/PC, FC/PC, SC/APC, FC/APC
Operating Wavelength:
1270nm-1610nm
Maximum Input Power:
Standard Version: +3dBm
-H Version: -7dBm

Optical Sensitivity:
Standard Version: -14dBm @ 35dB S/N
-H Version: -23dBm @ 35dB S/N
-29dBm @ 25dB S/N
Optical Attenuation:
AGC Hold Range: 10dB optical

Electrical:
Voltage: +12V DC
Power: 5W
EMI/RFI: Complies with FCC Part 15, Class A
EU EMC Directive

Physical:
Number of slots: 1

Ordering Information

L-Band Satellite Fiber Receiver with VistaLINK®
Note: 75Ω I/O impedance ships standard

7707LR	L-Band Satellite Fiber Receiver
7707LR-H	L-Band High Sensitivity Satellite Fiber Receiver
7707LR-WB	L-Band Satellite Fiber Receiver, Wideband
7707LR-H-WB	L-Band High Sensitivity Satellite Fiber Receiver, Wideband

Ordering Options Rear Plate and Fiber Connector must be specified at time of order
Eg. Model +3RU +SC

Impedance Suffix
+50 50Ω I/O impedance

Connector Suffix
+SC SC/PC
+AP+SC SC/APC (Angle polished)
+ST ST/PC
+FC FC/PC
+AP+FC FC/APC (Angle polished)
+F75 75Ω, F-Type rear connector

Rear Plate Suffix
+3RU 3RU Rear Plate for use with 7700FR-C Multiframe
+1RU 1RU Rear Plate for use with 7701FR Multiframe
+SA Standalone Enclosure Rear Plate

Enclosures
7700FR-C 3RU Multiframe, which holds up to 15 single slot modules
7701FR 1RU Multiframe, which holds up to 3 single or dual slot modules
S7701FR Standalone enclosure

7707LTA & 7707LTA-WB

L-Band Fiber Transmitter with VistaLINK® Monitoring

The 7707LTA and 7707LTA-WB are VistaLINK® capable fiber optic transmitters for L-Band satellite signals. The 7707LTA-WB offers extended bandwidth from 250 to 2250MHz vs 950 to 2250MHz for the 7707LTA version. The 7707LTA and 7707LTA-WB accept one L-Band coaxial input and provide a fiber optic output signal at 1310nm, 1550nm, CWDM or DWDM wavelengths. An L-Band BNC output is also provided for monitoring or further signal distribution. Monitoring and control of card status is provided locally at the card edge and remotely via VistaLINK®.

The 7707LTA and 7707LTA-WB occupy one card slot and can be housed in a 1RU frame which will hold up to 3 modules, a 3RU frame which will hold up to 15 modules, or a standalone enclosure which will hold 1 module.

Features & Benefits

- Band operation:
  - 7707LT: 905 to 2250MHz
  - 7707LTA-WB: 250 to 2250MHz
- Wide dynamic range RF input (-20 to -65dBm)
- Protocol transparent - transmits all video, audio and data modulation formats
- Supports manual and automatic gain control (AGC)
- Wide AGC hold range (50dB) using 7707LTA/LTA-WB + 7707LR/LR-WB
- Additional buffered output for monitoring or distribution
- LNB power at +13 or +17V DC with built-in current limiting
- Available with BNC or F-Type connector options
- Available with wavelengths of 1310nm, 1550nm, CWDM (ITU-T G.694.2 compliant) and DWDM (ITU-T G.694.1 compliant)
- Supports single-mode and multi-mode fiber optic cable
- Available in SC/PC, ST/PC, FC/PC and APC connector options
- Fully hot-swappable from front of frame
- Comprehensive signal and card status monitoring via four digit card edge display or remotely through SNMP and VistaLINK®
- VistaLINK® capability is available when modules are used with the 3RU 7700FR-C frame and a 7700FC VistaLINK® Frame Controller module in slot 1 of the frame

7707LTA & 7707LTA-WB Application Configurations

APPLICATION	OPTICAL/LINK BUDGET	TRANSMITTER SIDE		RECEIVER SIDE		DESCRIPTION
		ORDERING PRODUCT INFO	TX POWER	ORDERING PRODUCT INFO	RX SENSITIVITY	
ONE SIGNAL PER FIBER						
Short to Medium Haul	14dB/40km	7707LTA13	0dBm	7707LR	-14dBm	1310nm FP laser on Tx
Medium Haul	16dB/45km	7707LTA13L	+2dBm	7707LR	-14dBm	1310nm DFB laser on Tx
Long Haul	16dB/64km	7707LTA15	+2dBm	7707LR	-14dBm	1550nm DFB laser on Tx
Long Haul	25dB/71km	7707LTA13L	+2dBm	7707LR-H	-23dBm	1310nm DFB laser on Tx, High Sensitivity RX
Long Haul	25dB/100km	7707LTA15	+2dBm	7707LR-H	-23dBm	1550nm DFB laser on Tx, High Sensitivity RX
MULTI-SIGNAL PER FIBER (WAVELENGTH MUX/DEMUX)						
Medium Haul	12.5dB/50km	7707LTAxx	+2dBm	7707LR	-14dBm	1470nm-1610nm CWDM DFB laser on Tx, with 8 Ch CWDM Mux/Demux*
Long Haul	21.5dB/86km*	7707LTAxx	+2dBm	7707LR-H	-23dBm	1470nm-1610nm CWDM DFB laser on Tx, High Sensitivity RX, 8 Ch CWDM Mux/Demux*
Long Haul	16dB/64km**	7707LTADxxx	+7dBm	7707LR	-14dBm	DWDM DFB laser on Tx, with 8 Ch DWDM Mux/Demux**
Long Haul	25dB/100km**	7707LTADxxx	+7dBm	7707LR-H	-23dBm	DWDM DFB laser on Tx, High Sensitivity RX, 8 Ch DWDM Mux/Demux**

Fiber loss = 0.35/0.25dB per km @ 1310nm/1550nm
*Assumes 8 Channel upper band CWDM Mux/Demux loss of 3.5dB
**Assumes 8 Channel DWDM Mux/Demux loss of 5dB

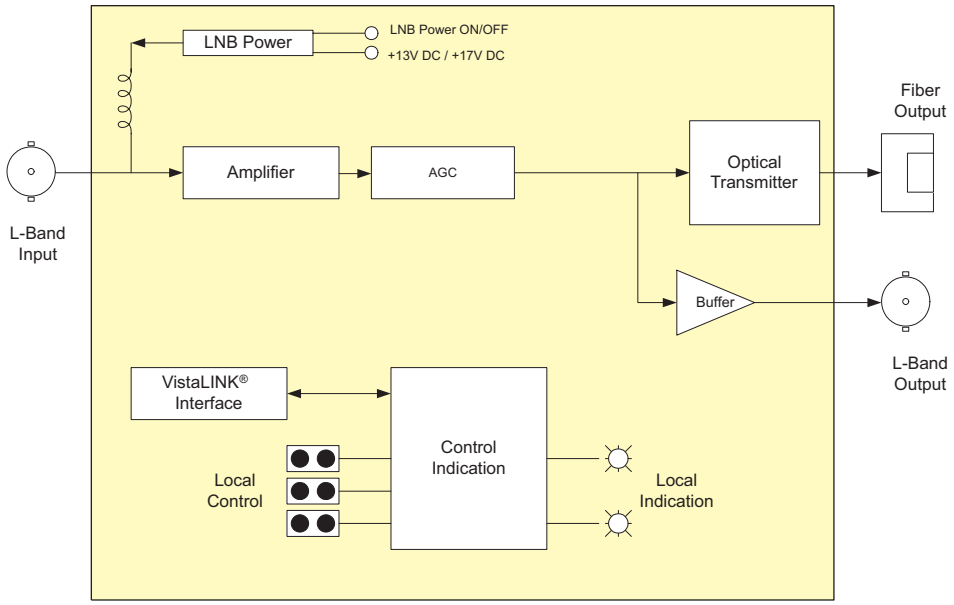

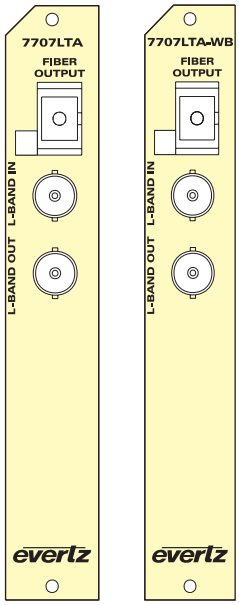

Specifications

RF Input:
Number of Inputs: 1
Connector: BNC per IEC 60169-8 Amendment 2 (F-type optional)
I/O Impedance: 75Ω (50Ω optional) (See Ordering Information)
Return Loss: > 10dB
Frequency Range: 950MHz-2250MHz (7707LTA)
250MHz-2250MHz (7707LTA-WB)
Input Power Range: -20 to -65dBm
AGC Hold Range: -20 to -50dBm

RF Monitoring Output:
Number of Outputs: 1
Connector: BNC per IEC 60169-8 Amendment 2 (F-type optional)
I/O Impedance: 75Ω (50Ω optional) (See Ordering Information)
Return Loss: >10dB
Frequency Range: 950MHz-2250MHz (7707LTA)
250MHz-2250MHz (7707LTA-WB)
Flatness: ±1.5dB @ 950MHz-2250MHz (7707LTA)
±2.0dB @ 250MHz-2250MHz (7707LTA-WB)
±0.25dB @ any 36MHz BW

Output Signal Level:
AGC mode: -20dBm constant (within AGC range)
Manual mode: (Input signal) + (manual Gain setting) -5dB
OIP3: +10dBm (-40dBm input level)
Intermodulation Products: -55dBc (-20dBm RF in, AGC mode)
Carrier to Noise: 37dB @ any 36MHz BW
Noise Figure: 20dB/32dB (minimum/maximum optical loss)

Optical Output:
Number of outputs: 1
Connector: Female SC/PC, ST/PC, FC/PC, SC/APC, FC/APC
Operating Wavelengths:
Standard: 1310nm, 1550nm (nominal)
CWDM: 1270nm to 1610nm
DWDM: C-Band (ITU G.694.1 compliant)

Output Power:
1310nm FP: 0dBm ±1dBm
1310nm, 1550nm &
CWDM DFB: +2dBm ±1dBm
DWDM DFB: +7dBm ±1dBm

Electrical:
Voltage: +12V DC
Power: 6W (Non DWDM)
9W (DWDM)

Physical:
Number of slots: 1

Compliance:
Electrical Safety: CSA Listed to UL 60065-03, IEC 60065
Complies with CE Low voltage Directive
Laser Safety: Class 1 laser product
Class 1M laser product (DWDM versions only)
Complies with 24 CFR 1040.10 and 1040.11, IEC 60825-1
EMI/RFI: Complies with FCC Part 15, Class A EU EMC directive

Ordering Information

L-Band Satellite Fiber Transmitter with VistaLINK®
Note: 75Ω I/O impedance ships standard

7707LTA13	1310nm, FP Laser, Short to Medium Haul
7707LTA13L	1310nm, DFB Laser, Medium Haul
7707LTA15	1550nm, DFB Laser, Long Haul
7707LTA13-WB	1310nm, FP Laser, Short to Medium Haul, Wideband
7707LTA13L-WB	1310nm, DFB Laser, Medium Haul, Wideband
7707LTA15-WB	1550nm, DFB Laser, Long Haul, Wideband

For CWDM, please refer to the end of the fiber section for ordering information

7707LTAxx	L-Band Satellite Fiber Transmitter, CWDM wavelength,
7707LTAxx-WB	L-Band Satellite Fiber Transmitter, CWDM wavelength, Wideband

For DWDM, please refer to the end of the fiber section for ordering information

7707LTADxxx	L-Band Satellite Fiber Transmitter, DWDM wavelength,
7707LTADxxx-WB	L-Band Satellite Fiber Transmitter, DWDM wavelength, Wideband

Ordering Options Rear Plate and Fiber Connector must be specified at time of order
Eg. Model +3RU +SC

Impedance Suffix
+50 50Ω I/O impedance

Connector Suffix
+SC SC/PC
+AP+SC SC/APC (Angle polished available with 7707LTA13 only)
+ST ST/PC
+FC FC/PC
+AP+FC FC/APC (Angle polished available with 7707LTA13 only)
+F75 75Ω, F-Type rear connector

Rear Plate Suffix
+3RU 3RU Rear Plate for use with 7700FR-C Multiframe
+1RU 1RU Rear Plate for use with 7701FR Multiframe
+SA Standalone Enclosure Rear Plate

Enclosures
7700FR-C 3RU Multiframe, which holds up to 15 single slot modules
7701FR 1RU Multiframe, which holds up to 3 single or dual slot modules
S7701FR Standalone Enclosure

7707OO

Optical Regenerator / Wavelength Converter, 19.4Mb/s to 540Mb/s

Features & Benefits

- Can be used as optical regenerator/repeater, E to O converter, O to E converter, O to O wavelength converter
- Auto-rate selection, reclocking and indication for all SMPTE 259M standards from 143-540Mb/s
- Supports additional standards of SMPTE 305M(SDTi), SMPTE 310M (19.4Mb/s) and M2S or DVB-ASI (270Mb/s)
- Can also support Datacom/Telecom rates up to 540Mb/s
- Coaxial or optical input (jumper selectable)
- Supports single-mode and multi-mode fiber optic cable
- Optical output wavelengths of 1310nm, 1550nm and up to sixteen CWDM wavelengths (ITU-T G.694.2 compliant)
- DWDM wavelengths (ITU-T G.694.1 compliant) also available
- Independent isolated output drivers to ensure no cross channel loading effects and to maintain polarity from input to output for DVB-ASI applications
- Comprehensive signal and card status monitoring via four digit card edge display
- Detection and display of optical input power, video format and EDH errors
- Fully hot-swappable from front of frame
- Two BNC serial digital outputs

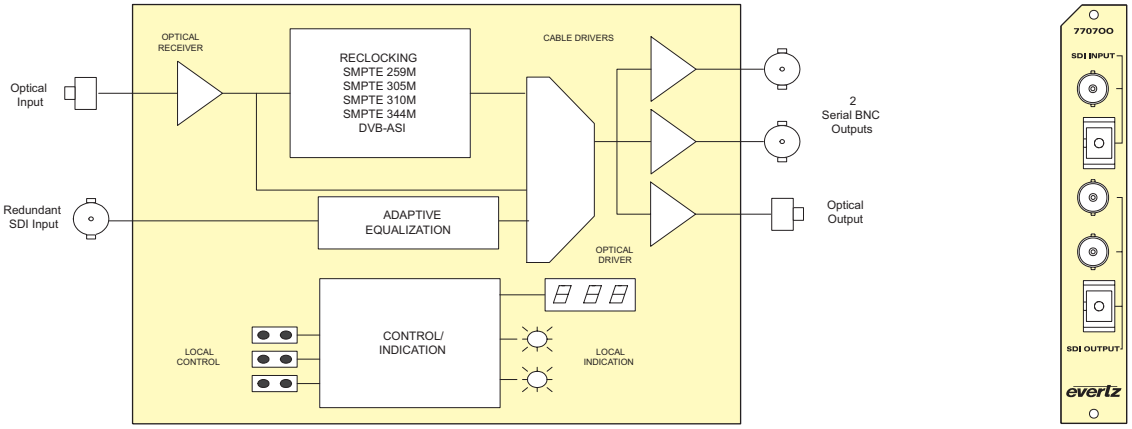

Specifications

Standards: SMPTE 259M A, B, C, D, SMPTE 297M, SMPTE 305M, SMPTE 310M, DVB-ASI, M2S

Optical Input:
Connector: Female SC/PC, ST/PC, FC/PC
Operating Wavelength: 1270nm to 1610nm
Max Input Power: 0dBm
Optical Sensitivity: -31dBm

Electrical Video Input:
Normal: SMPTE 259M (143 to 540Mb/s) or DVB/ASI
Jumper Selectable: SMPTE 310M (19.4Mb/s)
Connector: 1 BNC per IEC 60169-8 Amendment 2
Equalization: Automatic to 275m @ 270Mb/s with Belden 8281 (or equivalent)
Return Loss: > 15db to 540Mb/s

Optical Outputs:
Connector: SC/PC, ST/PC, FC/PC female housing
Return Loss: > 14dB
Jitter: < 0.15 UI (Reclocked)
< 0.20 UI (Non-reclocked)

Nominal Wavelength: 1310nm, 1550nm
CWDM Wavelengths: See Ordering Information
DWDM Wavelengths: See Ordering Information
Output Power:
1310nm FP: -7dBm ±1dBm
1550nm DFB: 0dBm ±1dBm
CWDM DFB: 0dBm ±1dBm
DWDM DFB: +7dBm ±1dBm

Electrical Video Outputs:
Number of Outputs: 2 per card - reclocked (both outputs maintain polarity from input to output for DVB-ASI applications)
Connectors: BNC per IEC 60169-8 Amendment 2
Impedance: 75Ω (nominal)
Signal Level: 800mV nominal
DC Offset: 0V ±0.5V
Rise and Fall Time: 900ps nominal
Overshoot: < 10% of amplitude
Return Loss: > 15dB up to 540Mb/s
Wide Band Jitter: < 0.15 UI (Reclocked)
< 0.20 UI (Non-reclocked)

Electrical:
Voltage: +12V DC
Power: 6W (Non DWDM), 9W (DWDM)

Physical:
Number of Slots 1

Compliance:
Electrical Safety: CSA Listed to UL 60065-03, IEC 60065
Complies with CE Low voltage Directive
Laser Safety: Class 1 laser product
Complies with 24 CFR 1040.10 and 1040.11
IEC 60825-1
EMI/RFI: Complies with FCC Part 15, Class A
EU EMC directive

Ordering Information

7707OO13 Optical Regenerator / Wavelength Converter for rates to 540Mb/s, 1270nm to 1610nm input, 1310nm FP output
7707OO15 Optical Regenerator / Wavelength Converter for rates to 540Mb/s, 1270nm to 1610nm input, 1550nm DFB laser output

For CWDM, please refer to the end of the fiber section for ordering information
7707OOxx Optical Regenerator / Wavelength Converter for rates to 540Mb/s, 1270nm to 1610nm input, CWDM output

For DWDM, please refer to the end of the fiber section for ordering information
7707OODxxx Optical Regenerator / Wavelength Converter for rates to 540Mb/s, 1270nm to 1610nm input, DWDM output

Ordering Options Rear Plate and Fiber Connector must be specified at time of order
Eg: Model +SC +3RU

Rear Plate Suffix
+3RU 3RU Rear Plate for use with 7700FR-C Multiframe
+1RU 1RU Rear Plate for use with 7701FR Multiframe
+SA Standalone Enclosure Rear Plate

Connector Suffix
+SC SC/PC
+ST ST/PC
+FC FC/PC

Enclosures
7700FR-C 3RU Multiframe which holds up to 15 single slot modules
7701FR 1RU Multiframe which holds up to 3 single or dual slot modules
S7701FR Standalone enclosure

Features & Benefits

- Can be used as optical regenerator/repeater, O to E converter or O to O wavelength converter
- Auto rate selection, reclocking and indication for all SDI (SMPTE 259M) and HD-SDI (SMPTE 292M) data rates from 143Mb/s to 1.485Gb/s
- Also supports SMPTE 305M (SDTi), SMPTE 310M (19.4Mb/s) and M2S or DVB-ASI (270Mb/s)
- Supports other Telecom/Datacom rates up to 1.5Gb/s
- Optical output wavelengths of 1310nm, 1550nm and up to sixteen CWDM wavelengths (ITU-T G.694.2 compliant)
- DWDM wavelengths (ITU-T G.694.1 compliant) also available
- Wide range optical input (1270nm-1610nm)
- BNC outputs maintain polarity from input to output for DVB-ASI applications
- Supports single-mode and multi-mode fiber optic cable
- Comprehensive signal and card status monitoring via four digit card edge display or remotely through SNMP and VistaLINK® - capable resources
- Detection & display of optical input power, video format, and EDH errors (SDI only)
- Fully hot-swappable from front of frame

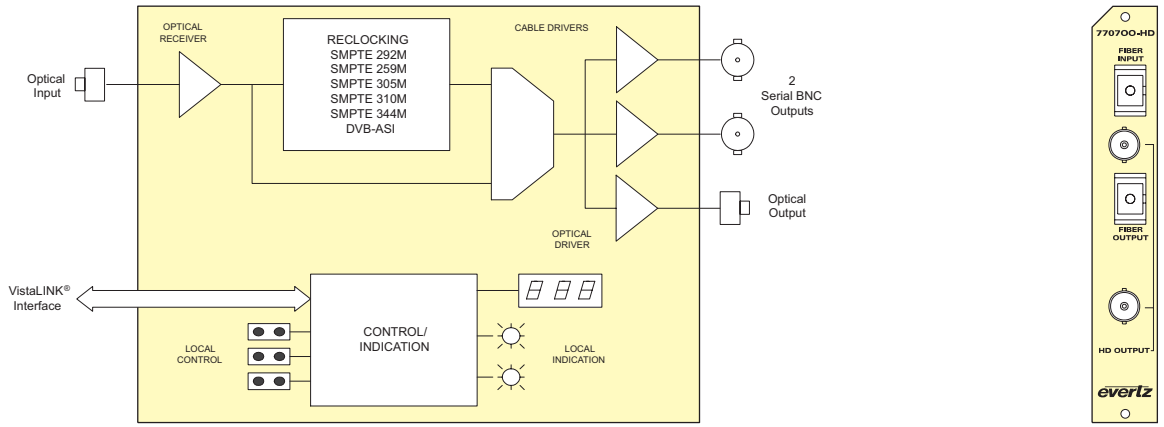

Specifications

Standards: SMPTE 297M
Reclocked: SMPTE 292M, SMPTE 259M A, B, C, D, SMPTE 344M, SMPTE 305M, SMPTE 310M (19.4Mb/s), DVB-ASI, M2S
Non-Reclocked: Any bi-level signal type at rates of 19.4Mb/s-1.485Gb/s

Optical Input:
Connector: Female SC/PC, ST/PC or FC/PC
Operating Wavelength: 1270nm-1610nm
Max. Input Power:
Standard: -1dBm
High Sensitivity (-H): -7dBm
Optical Sensitivity:
Standard: -23dBm @ 1.485Gb/s
High Sensitivity (-H): -28dBm @ 1.485Gb/s

Optical Output:
Connector: SC/PC, ST/PC or FC/PC female housing
Return Loss: < 14dB
Wide Band Jitter: < 0.2 UI (reclocked)
Nominal Wavelength: 1310nm, 1550nm
CWDM Wavelengths: See Ordering Information
DWDM Wavelengths: See Ordering Information
Output Power:
1310nm FP: -7dBm ±1dBm
1550nm DFB: 0dBm ±1dBm
CWDM DFB: 0dBm ±1dBm
DWDM DFB: +7dBm ±1dBm

Electrical Video Outputs:
Number of Outputs: 2 per card reclocked (both outputs maintain polarity from input to output for DVB-ASI applications)
Connectors: BNC per IEC 60169-8 Amendment 2
Impedance: 75Ω (nominal)
Signal Level: 800mV (nominal)
DC Offset: 0V ±0.5V
Rise and Fall Time: < 270ps
Overshoot: < 10% of amplitude.
Return Loss: > 12dB to 1.5GHz
Wide Band Jitter: < 0.2 UI (Reclocked)

Electrical:
Voltage: +12V DC
Power: 8W (Non-DWDM version)
11W (DWDM version)

Physical:
7700 or 7701 frame mounting:
Number of slots: 1

Compliance:
Electrical Safety: CSA Listed to UL 60065-03, IEC 60065
Complies with CE Low voltage Directive

Laser Safety: Class 1 laser product
Complies with 24 CFR 1040.10 and 1040.11
IEC 60825-1
EMI/RFI: Complies with FCC Part 15, Class A
EU EMC directive

Ordering Information

7707OO13-HD Optical Regenerator/Wavelength Converter for rates to 1.5Gb/s, 1270nm to 1610nm input, 1310nm FP output
7707OO15-HD Optical Regenerator/Wavelength Converter for rates to 1.5Gb/s, 1270nm to 1610nm input,1550nm DFB Laser output

For CWDM, please refer to the end of the fiber section for ordering information
7707OOxx-HD Optical Regenerator/Wavelength Converter for rates to 1.5Gb/s, 1270nm to 1610nm input, CWDM output
7707OOxx-HD-H Optical Regenerator/Wavelength Converter for rates to 1.5Gb/s, High Sensitivity (-28 dBm) input, CWDM output

For DWDM, please refer to the end of the fiber section for ordering information
7707OODxxx-HD Optical Regenerator/Wavelength Converter for rates to 1.5Gb/s, 1270nm to 1610nm input, DWDM output
7707OODxxx-HD-H Optical Regenerator/Wavelength Converter for rates to 1.5Gb/s, High Sensitivity (-28dBm) input, DWDM output

Ordering Options Rear Plate and Fiber Connector must be specified at time of order
Eg: Model +SC +3RU

Rear Plate Suffix
+3RU 3RU Rear Plate for use with 7700FR-C Multiframe
+1RU 1RU Rear Plate for use with 7701FR Multiframe
+SA Standalone Enclosure Rear Plate

Connector Suffix
+SC SC/PC
+ST ST/PC
+FC FC/PC

Enclosures
7700FR-C 3RU Multiframe which holds up to 15 single slot modules
7701FR 1RU Multiframe which holds up to 3 single or dual slot modules
S7701FR Standalone enclosure

7707OO-2-OC & 7707OO-2L-OC

Optical to Optical Wavelength Shifter/Regenerator

The 7707OO-2-OC and 7707OO-2L-OC are VistaLINK® enabled, optical to optical wavelength shifter/regenerator for telecom and datacom signals. Monitoring and control of card status and parameters is provided locally at the card edge and remotely via VistaLINK®.

The 7707OO-2-OC and 7707OO-2L-OC accepts two fiber inputs and provides two optical outputs. All versions accept 1270nm to 1610nm optical input signals on multi-mode or single-mode fiber. The 7707OO-2-OC and 7707OO-2L-OC are available in 1310nm, CWDM and DWDM configurations.

Features & Benefits

- Reclocking for OC-3/STM-1, OC-12/STM-4 and OC-48/STM-16 and a number of other telecom and datacom rates (see specifications)
- Non-reclocking mode for support of additional signal rates (125Mb/s-3.187Gb/s)
- Full-Duplex
- Wide range optical input (1270nm - 1610nm)
- 1310nm, 1550nm and CWDM wavelengths available for optical outputs
- DWDM wavelengths (ITU-T G.694.1 compliant) also available for optical outputs
- Comprehensive signal and card status monitoring via four digit card edge display or remotely through SNMP and VistaLINK®
- Detection and display of optical input power and data rate
- Fully hot-swappable from front of frame
- VistaLINK® capability is available when modules are used with the 3RU 7700FR-C frame and a 7700FC VistaLINK® Frame Controller module in slot 1 of the frame

7707OO-2-OC

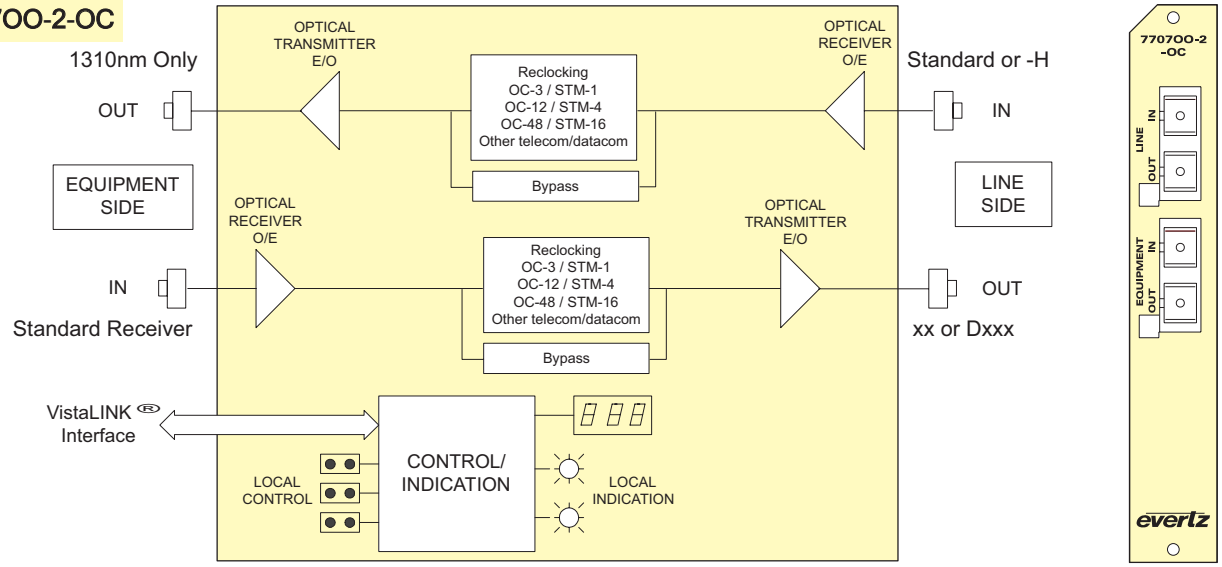

7707OO-2L-OC

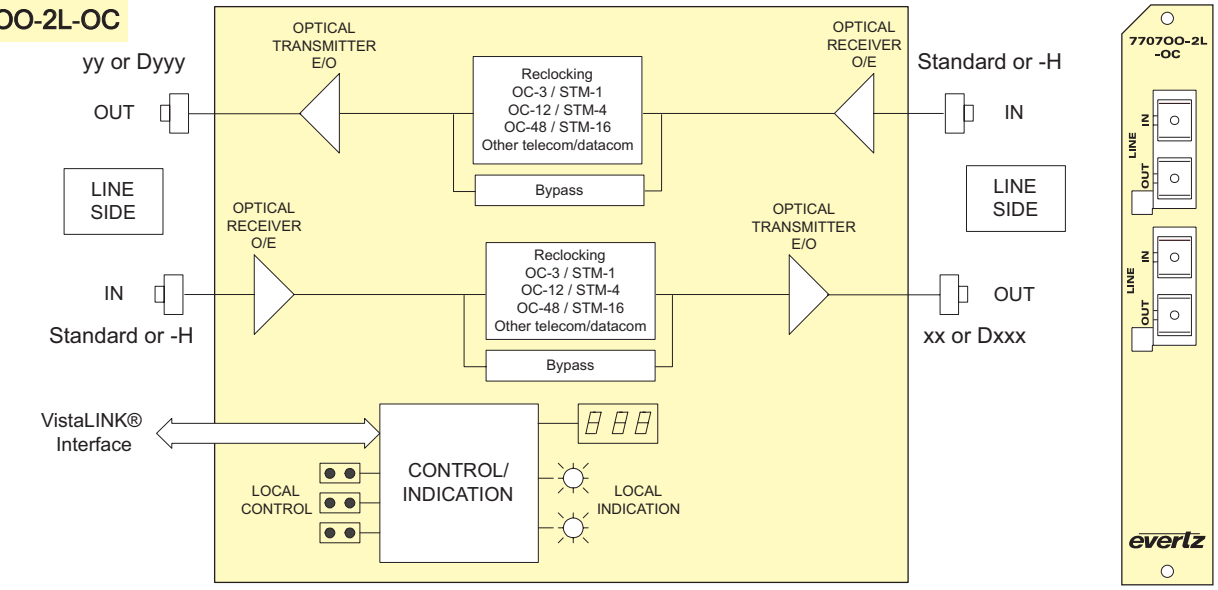

Specifications

Standards (reclocked):

Standard	Data Rate
Telecom	
OC48/STM16	2.488 Gb/s
OC12/STM4	622 Mb/s
OC3/STM1	155 Mb/s
Gigabit Ethernet	1.25 Gb/s

Datacom	
Fiber Channel	2.125 Gb/s
Fiber Channel	1.062 Gb/s
Fiber Channel	531 Mb/s
Fiber Channel	266 Mb/s
Fiber Channel	133 Mb/s
Fast Ethernet	125 Mb/s
XAUI	3.125 Gb/s
XAUI	3.187 Gb/s
ESCON	200 Mb/s

Optical Inputs:

Number of Inputs:	2
Rates (non-reclocked):	125Mb/s-3.187 Gb/s
Connector:	Female SC/PC, ST/PC, FC/PC, SC/APC
Wavelength:	1270nm -1610nm
	Optical Sensitivity
Standard & Equipment Side:	-21dBm
High Sensitivity (-H):	-28dBm
Max. Input Power:	
Standard & Equipment Side:	-1dBm
High Sensitivity (-H):	-7dBm
Fiber Size:	62 mm core / 125 mm overall

Optical Outputs:

Standards:	same as optical input
Number of Outputs:	2
Connector:	SC/PC, ST/PC, FC/PC, SC/APC female housing
Return Loss:	< 14 dB
Fiber Size:	9 mm core / 125 mm overall

Equipment Side:

Wavelengths Standard:	1310nm
Output Power 1310nm FP:	-7dBm ± 1dBm

Line Side Wavelengths:

Standard:	1310nm, 1550nm (nominal)
CWDM:	1270nm to 1610nm (See ordering information)
DWDM:	C-Band/L-Band (ITU-T G.694.1 compliant)
Output Power:	
1310nm FP:	-7dBm ± 1dBm
CWDM:	0dBm ± 1dBm
DWDM:	+7dBm ± 1dBm

Electrical:

Voltage:	+12VDC
Power:	6 Watts (9 Watts DWDM)
EMI/RFI:	Complies with FCC regulations for class A devices Complies with EU EMC directive

Physical:

7700 or 7701 frame mounting:	
Number of slots:	1

Ordering Information

7707OO13-2-OC	1310nm FP laser and standard receiver (line side), VistaLINK®
7707OO15-2-OC	1550nm DFB laser and standard receiver (line side), VistaLINK®
7707OO15-2L-OC	1550nm FP laser, dual line, VistaLINK®
For CWDM applications please refer to the end of the fiber section for details	
7707OOxx-2-OC	CWDM DFB laser and standard receiver (line side), VistaLINK®
7707OOxx/yy-2L-OC	CWDM DFB laser, dual line, standard receiver, VistaLINK®
7707OOxx-2-OC-H	CWDM DFB laser, high sensitivity receiver (line side), VistaLINK®
7707OOxx/yy-2L-OC-H	CWDM DFB laser, high sensitivity receiver, VistaLINK®
For DWDM applications please refer to the end of the fiber section for details	
7707OODxxx-2-OC	DWDM DFB laser and standard receiver (line side), VistaLINK®
7707OODxxx/Dyyy-2L-OC	DWDM laser, dual line, standard receiver, VistaLINK®
7707OODxxx-2-OC-H	DWDM DFB laser, high sensitivity receiver (line side), VistaLINK®
7707OODxxx/Dyyy-2L-OC-H	DWDM laser, high sensitivity receiver, VistaLINK®

Ordering Options	Rear Plate and Fiber Connector must be specified at time of order Eg: Model +SC +3RU
Connector Suffix	
+SC	SC/PC
+ST	ST/PC
Rear Plate Suffix	
+3RU	3RU Rear Plate for use with 7700FR-C Multiframe
+1RU	1RU Rear Plate for use with 7701FR Multiframe
+SA	Standalone Enclosure Rear Plate
Enclosures	
7700FR-C	3RU Multiframe which holds up to 15 single slot modules
7701FR	1RU Multiframe which holds up to 3 single or dual slot modules
S7701FR	Standalone Enclosure

9000EDFA-B,-L & -P

Erbium Doped Fiber Amplifiers

The 9000EDFA series are high quality, erbium doped fiber amplifiers used to extend signals in long-haul optical communications applications. Available in boost, inline, and pre-amp configurations, the different models cover various transmission scenarios at points all along the optical communications path. Combined with Evertz optical transmitters, receivers and DWDM multiplexing products, the 9000EDFA series amplifiers offer a complete solution for long-haul signal transmission.

Features & Benefits

- Low noise figure
- Low Power Consumption
- Wide Operating Wavelength Range
- 9000EDFA-P pre-amplifier has high input sensitivity for amplifying weak signals at the end of the optical path
- 9000EDFA-L inline amplifier combines high input sensitivity and high output power for amplifying optical signals at points within a long-haul path
- 9000EDFA-B boost amplifier provides high optical launch power at the beginning of a long-haul path

**9000EDFA is strictly for DWDM applications*
***9000EDFA to be used ONLY in Single Mode Fiber applications*

Specifications

	9000EDFA-B			9000EDFA-L			9000EDFA-P		
	MIN	TYP	MAX	MIN	TYP	MAX	MIN	TYP	MAX
Operational Wavelength (nm)	1530	1550	1560	1530	1550	1560	1530	1550	1560
Signal Input Power (dBm)	-6		3	-25		-8	-35		-25
Signal Output Power (dBm)	13	17		3	15				-5
Small Signal Gain @-35dBm input									30
Noise Figure @ 1550nm, -0dBm input (dB)		5.0	5.5		4.8	5.5		4.5	5.0
In/Output Isolation (dB)	30			30			30		
Return Loss	50			50			50		
Connectors	SC/PC, FC/PC, ST/PC, FC/APC or SC/APC								

Ordering Information

9000EDFA-B	Erbium Doped Fiber Boost Amplifier
9000EDFA-L	Erbium Doped Fiber Inline Amplifier
9000EDFA-P	Erbium Doped Fiber Pre-Amplifier

Ordering Options: Connector must be specified at time of order - eg: [model]+SC

Connector Suffix

+SC	SC/PC
+ST	ST/PC
+FC	FC/PC
+AP+SC	SC/APC
+AP+FC	FC/APC

Power:

Voltage (standard)	85-240V AC autoranging, 50/60 Hz

Physical:

Dimensions	17"W x 10.25"D x 1.74"H (434mmW x 260mmD x 44mmH)
Mounting	1RU, Standard 19" rack

This page is intentionally left blank

Features & Benefits

- Bi-directional mux/demux of up to 16 wavelengths in the 1270nm to 1610nm spectrum (ITU-T G.694.2 compliant)
- Expandable from 4 or 8 to 12 or 16 channel systems
- Passive design for any bit rate
- Low insertion loss to conserve system power
- High optical isolation for low crosstalk
- Fully hot-swappable from front of frame with no fiber disconnect/reconnect required
- SC/PC, ST/PC, FC/PC* connector options
- Fiber protector to prevent connector damage
- Housed in Evertz standard 3RU or 1RU Multiframe

**7705CWDM to be used ONLY in Single Mode Fiber applications*

Applications

- Multi-channel transport of video, audio, data, control in fiber limited applications
- Cost reduction exercises through fewer leased fibers
- Studio and Facility extension/expansion
- STL and TSL links
- Signal aggregation for outdoor and event coverage
- Signal aggregation for security and monitoring

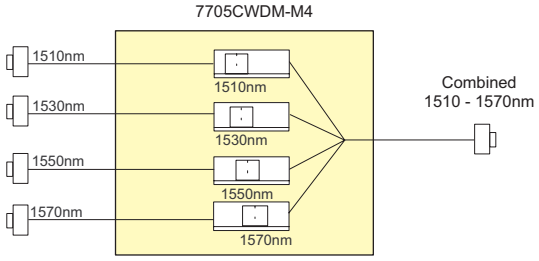

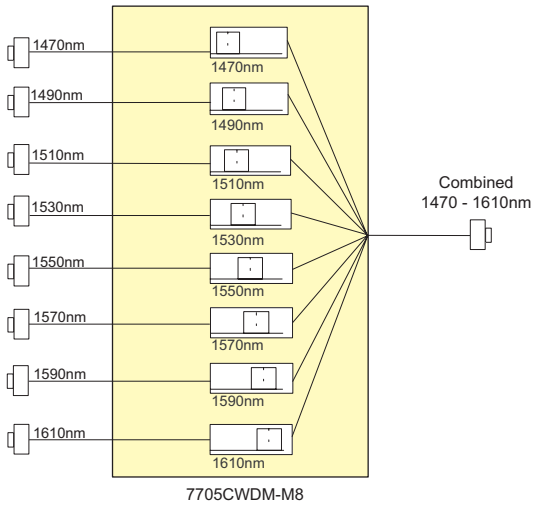

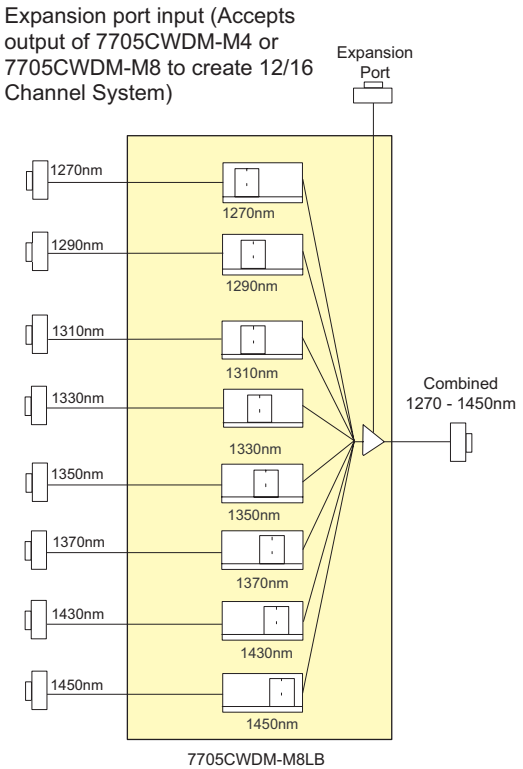

Function	Ordering Information	Description	Slots Occupied
4 Channel CWDM Mux	7705CWDM-M4	4 Channel CWDM Mux (1510nm-1570nm)	1
4 Channel CWDM Demux	7705CWDM-D4	4 Channel CWDM Demux (1510nm-1570nm)	1
8 Channel CWDM Mux	7705CWDM-M8	8 Channel CWDM Mux (1470nm-1610nm)	2
8 Channel CWDM Demux	7705CWDM-D8	8 Channel CWDM Demux (1470nm-1610nm)	2
12 Channel CWDM Mux	7705CWDM-M4 & 7707CWDM-M8LB	12 Channel CWDM Mux (1270nm-1570nm)	3
12 Channel CWDM Demux	7705CWDM-D4 & 7705CWDM-D8LB	12 Channel CWDM Demux (1270nm-1570nm)	3
16 Channel CWDM Mux	7705CWDM-M8 & 7707CWDM-M8LB	16 Channel CWDM Mux (1270nm-1610nm)	4
16 Channel CWDM Demux	7705CWDM-D8 & 7705CWDM-D8LB	16 Channel CWDM Demux (1270nm-1610nm)	4

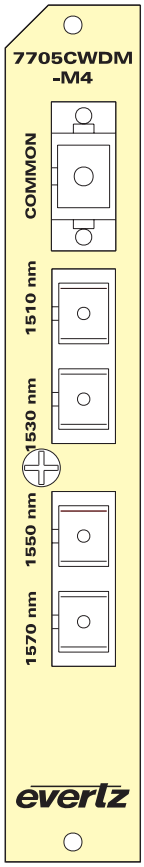

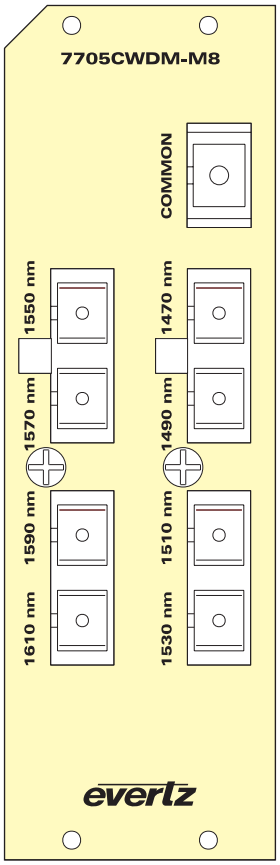

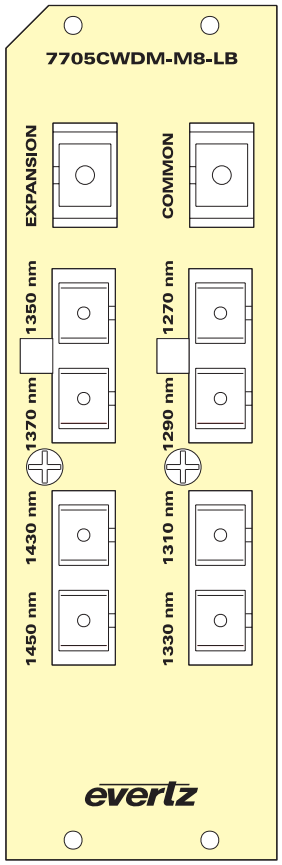

Specifications

Optical Input/Output:
Connector: SC/PC, ST/PC or FC/PC* female housing
Wavelength:
7705CWDM-4: 1510-1570nm
7705CWDM-8: 1470-1610nm
7705CWDM-8LB: 1270-1450nm
Channel Spacing: 20nm
Passband @ 0.5dB: > 13nm
Channel Uniformity: < 1.5dB

Isolation Adjacent Channel: > 30dB
Directivity: > 50dB
Fiber Size: 9µm core/125µm overall
Return Loss: > 45dB

Link Loss with Mux and Demux Combination:
7705CWDM-4: < 2.5dB Maximum Loss
7705CWDM-8: < 3.5dB Maximum Loss
7705CWDM-8LB: < 5.5dB Maximum Loss
Expansion Port: < 3.5dB Maximum Loss
7707CWDM-4 + 7707CWDM-8LB:
< 6.0dB (1270nm-1570nm)
7705CWDM-8 + 7705CWDM-8LB:
< 5.5dB (1270nm-1450nm)
< 7.0dB (1470nm-1610nm)

Ordering Information

7705CWDM-D4	4 Channel CWDM Demux (1510nm-1570nm)
7705CWDM-D8	8 Channel CWDM Demux (1470nm-1610nm)
7705CWDM-D8LB	8 Channel Low Band CWDM Demux (1270nm-1450nm)
7705CWDM-M4	4 Channel CWDM Mux (1510nm-1570nm)
7705CWDM-M8	8 Channel CWDM Mux (1470nm-1610nm)
7705CWDM-M8LB	8 Channel Low Band CWDM Mux (1270nm-1450nm)

***Note: Retention screws have been added to the rear panels of these units. Please note that rear panels from older MUX DEMUX units will not be backwards compatible with newer rear panel units. (See block diagram for rear panel drawings)*

Ordering Options Rear Plate and Fiber Connector must be specified at time of order
Eg: Model +3RU +SC

Rear Plate Suffix

+3RU	3RU Rear Plate for use with 7700FR-C Multiframe
+1RU	1RU Rear Plate for use with 7701FR Multiframe
+SA	Standalone Enclosure (with power supply)

Connector Suffix

+SC	SC/PC
+ST	ST/PC
+FC	FC/PC*

**Note: ST/PC & FC/PC connector options available on 'COMMON' and "EXPANSION" ports only (SC/PC on remaining fiber I/O ports)*

Fiber Optic Patch Cable

CB-FP1M-SCPC	Single mode fiber cable, 1m, SC/PC male termination
CB-FP1M-STPC	Single mode fiber cable, 1m, ST/PC male termination
CB-FP5M-SCPC	Single mode fiber cable, 5m, SC/PC male termination
CB-FP5M-STPC	Single mode fiber cable, 5m, ST/PC male termination
CB-FP10M-SCPC	Single mode fiber cable, 10m, SC/PC male termination
CB-FP10M-STPC	Single mode fiber cable, 10m, ST/PC male termination

Enclosures

7700FR-C	3RU Multiframe which holds up to 15 single slot modules
7701FR	1RU Multiframe which holds up to 3 single or dual slot modules
S7701FR	Standalone enclosure

7705DS-4 & 7705DS-8

4 & 8 Channel Optical Splitter

Features & Benefits

- Separates one optical input into 4 or 8 optical outputs
- Wideband operation from 1270nm - 1610nm
- Passive splitter design for any bit rate
- Fully hot-swappable from front of frame with no fiber disconnect/reconnect required
- Supports single mode fiber
- Available in SC, ST & FC* connector options
- 7705DS-4 occupies one card slot, 7705DS-8 occupies two card slots and both can be housed in a 1RU frame which will hold up to 3 modules, a 3RU frame which will hold up to 7 dual slot modules or 15 single slot modules or a standalone enclosure which will hold 1 module

**7705DS-4 & 7705DS-8 to be used ONLY in Single Mode Fiber applications*

5

7705DS-4

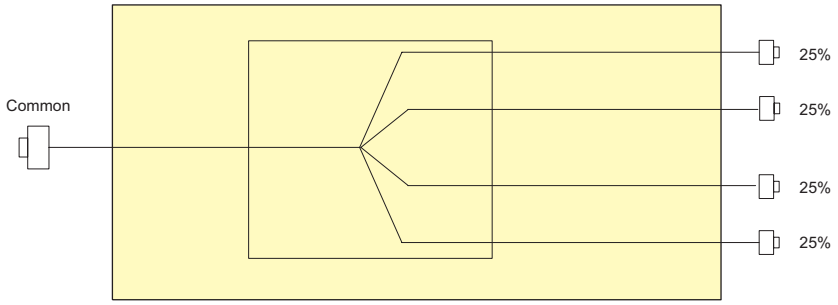

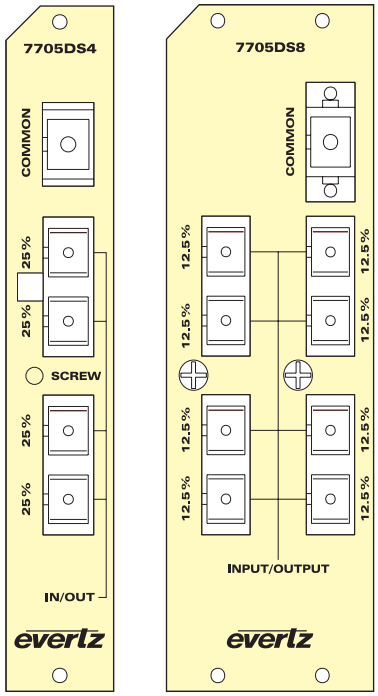

7705DS-8

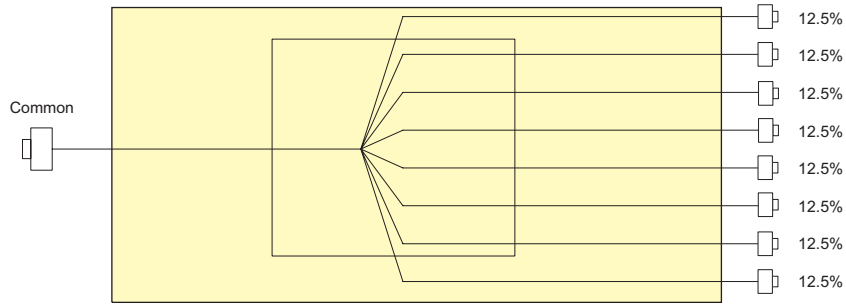

Specifications

Optical Input/Output:

Connector:	SC/PC, ST/PC & FC/PC* female housing
Wavelength:	1270nm to 1610nm
Insertion Loss:	
7705DS-4:	7dB typical, < 8.5dB maximum
7705DS-8:	10dB typical, < 11.0dB maximum
Uniformity:	
7705DS-4:	< 2.5dB
7705DS-8:	< 0.9dB
Directivity:	
7705DS-4:	> 50dB
7705DS-8:	> 55dB
Fiber Size:	9µm, single mode fiber

Physical:

Number of Slots:	
7705DS-4	1
7705DS-8	2

Ordering Information

7705DS-4	Four Channel Optical Splitter
7705DS-8	Eight Channel Optical Splitter

***Note: Retention screws have been added to the rear panels of these units. Please note that rear panels from older MUX DEMUX units will not be backwards compatible with newer rear panel units. (See block diagram for rear panel drawings)*

Ordering Options Rear Plate and Fiber Connector must be specified at time of order
Eg: Model +SC +3RU

Rear Plate Suffix

+3RU	3RU Rear Plate for use with 7700FR-C Multiframe
+1RU	1RU Rear Plate for use with 7701FR Multiframe
+SA	Standalone Enclosure Rear Plate

Connector Suffix

+SC	SC/PC
+ST	ST/PC*
+FC	FC/PC*

**Note: ST/PC & FC/PC connectors option is available only on 'COMMON' port (SC/PC on remaining fiber I/O ports)*

Fiber Optic Patch Cable

7705FC-SP1MSP	Single-mode fiber, 9µm core/900µm

Enclosures

7700FR-C	3RU Multiframe which holds up to 15 single slot modules
7701FR	1RU Multiframe which holds up to 3 single or dual slot modules
S7701FR	Standalone enclosure

Features & Benefits

- Bi-directional operation handles 1310nm and 1550nm bands
- Passive design for any bit rate
- Fully hot-swappable from front of frame with no fiber disconnect/reconnect required
- Low insertion loss to conserve system power
- Supports single mode fiber
- Available in SC, ST & FC connecter options

**7705WDM, 7705DS and 7705MS to be used ONLY in Single Mode applications*

Functions

- 7705WDM - Combines/separates 1310nm and 1470nm-1610nm wavelengths on/from a single fiber
- 7705WDM13/15 - Combines/separates 1310nm and 1550nm wavelengths on/from a single fiber
- 7705DS - Splits one signal into two signals of 50% power or combines two signals into one output signal.
- 7705MS - Splits input signal into two signals of 80%/20% power - used for fiber confidence monitoring

7705WDM, 7705WDM 13/15

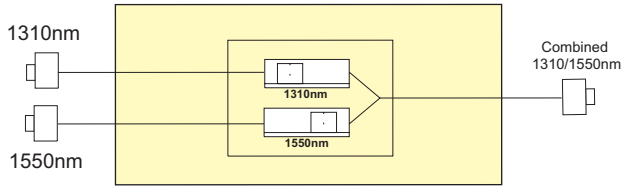

7705DS

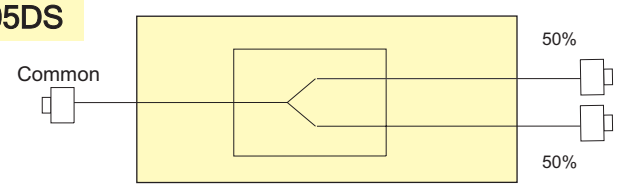

7705MS

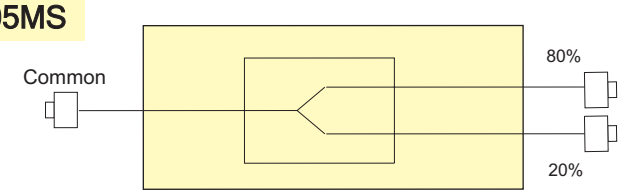

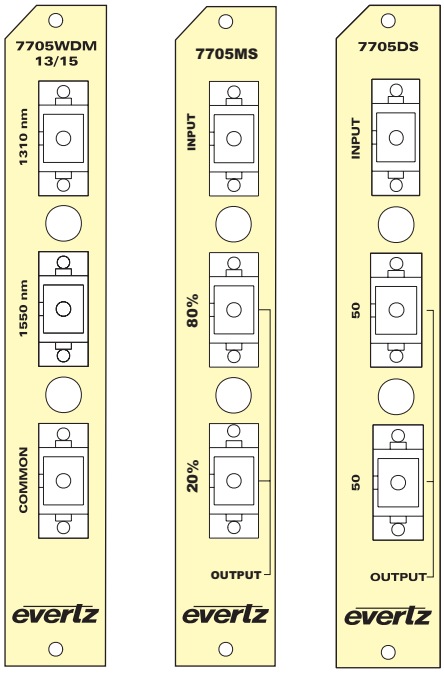

Specifications

Optical Input/Output:

Connector:	SC/PC, ST/PC, FC/PC female housing
Wavelength:	1310nm and 1550nm bands
Fiber Size:	9µm core/125µm overall

Insertion Loss:

7705WDM:	1310nm port, 2dB Maximum Loss 1550nm port, 3dB Maximum Loss (1470nm-1610nm)
7705WDM13/15:	1310nm port, 2dB Maximum Loss 1550nm port, 2dB Maximum Loss
7705DS:	50% port, 4dB Maximum Loss
7705MS:	80% port, 2dB Maximum Loss 20% port, 9dB Maximum Loss

Isolation:

7705WDM:	> 50dB between 1310nm/1550nm ports with 1470nm-1610nm on 1550nm port
7705WDM13/15:	> 25dB between 1310nm/1550nm ports at center wavelength ±20nm

Physical:

Number of Slots:	1

Ordering Information

7705WDM	Wideband wavelength Division Multiplexor
7705WDM13/15	Standard Wavelength Division Multiplexor
7705DS	Fiber Distribution Splitter
7705MS	Fiber Monitoring Splitter

Ordering Options Rear Plate and Fiber Connector must be specified at time of order
Eg: Model +SC +3RU

Rear Plate Suffix

+3RU	3RU Rear Plate for use with 7700FR-C Multiframe
+1RU	1RU Rear Plate for use with 7701FR Multiframe
+SA	Standalone Enclosure Rear Plate

Connector Suffix

+SC	SC/PC
+ST	ST/PC
+FC	FC/PC

Fiber Optic Patch Cable

CB-FP1M-SCPC	Single mode fiber cable, 1m, SC/PC male termination
CB-FP1M-STPC	Single mode fiber cable, 1m, ST/PC male termination
CB-FP5M-SCPC	Single mode fiber cable, 5m, SC/PC male termination
CB-FP5M-STPC	Single mode fiber cable, 5m, ST/PC male termination
CB-FP10M-SCPC	Single mode fiber cable, 10m, SC/PC male termination
CB-FP10M-STPC	Single mode fiber cable, 10m, ST/PC male termination
7705FC-SP1MSP	Single-mode fiber, 9µm core/900µm

Enclosures

7700FR-C	3RU Multiframe which holds up to 15 single slot modules
7701FR	1RU Multiframe which holds up to 3 single or dual slot modules
S7701FR	Standalone enclosure

7705DWDM

Dense WDM Optical Modules

Features & Benefits

- Cascadeable, bi-directional eight channel mux/demux modules
- ITU-T G.694.1 compliant 0.8nm (100GHz) channel spacing
- Capable of being inserted into CWDM wavelength slots adding an additional 8 or 16 DWDM wavelengths to existing CWDM systems
- Passive design for any bit rate
- Low insertion loss to conserve system power
- High optical isolation for low crosstalk
- Fully hot-swappable from front of frame with no fiber disconnect/reconnect required
- SC/PC, ST/PC*, FC/PC* connector options
- Fiber protector to prevent connector damage

Applications

- Multi-channel transport of video, audio, data, control in fiber limited applications
- Cost reduction exercises through fewer leased fibers
- Studio and Facility extension/expansion
- L-Band & IF Link transport
- STL and TSL Links
- Signal aggregation for outdoor and event coverage
- Signal aggregation for security and monitoring

**7705DWDM to be used ONLY in Single Mode Fiber applications*

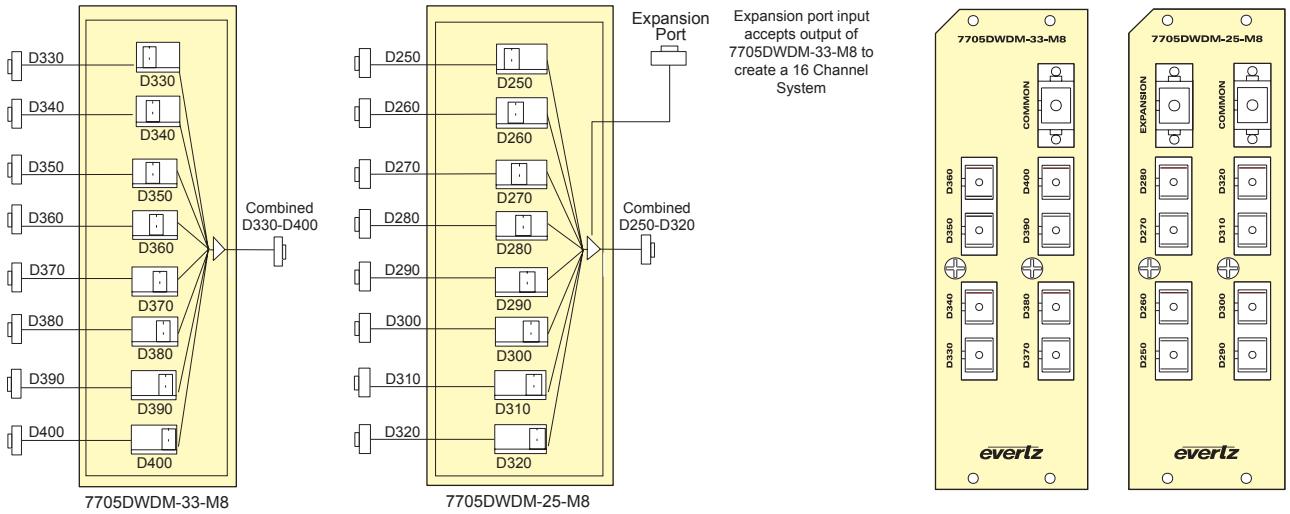

Specifications

Optical Input/Output:

Connector:	SC/PC, ST/PC or FC/PC* female housing
Wavelength:	C-Band (ITU G.694.1 compliant)
7705DWDM-25:	ITU C25-C32 (1557.36 - 1551.72nm)
7705DWDM-33:	ITU C33-C40 (1550.92 - 1545.32nm)
Channel Spacing:	100GHz (0.8nm nominal)
Passband @ 0.5dB:	±0.11nm
Channel Uniformity:	< 1.5dB

Isolation:	
Adjacent Channel:	> 25dB
Non-Adjacent Channel:	> 35dB
Directivity:	> 40dB
Max. Optical Power:	300mW or +25dBm
Fiber Size:	9µm core/125µm overall
Return Loss:	> 45dB
Max Input Power:	+25dBm

Link Loss with Mux and Demux Combination:

7705DWDM-8: < 4.5dB maximum loss (7705DWDM-25/33)

7705DWDM-16: < 7.5dB maximum loss (7705DWDM-33 + 7705DWDM-25)

Ordering Information

7705DWDM-25-M8	8 Channel Cascadeable DWDM Mux, 100GHz Spacing, ITU Channel C25-C32
7705DWDM-25-D8	8 Channel Cascadeable DWDM Demux, 100GHz Spacing, ITU Channel C25-C32
7705DWDM-33-M8	8 Channel Cascadeable DWDM Mux, 100GHz Spacing, ITU Channel C33 to C40
7705DWDM-33-D8	8 Channel Cascadeable DWDM Demux, 100GHz Spacing, ITU Channel C33 to C40

***Note: Retention screws have been added to the rear panels of these units. Please note that rear panels from older MUX DEMUX units will not be backwards compatible with newer rear panel units. (See block diagram for rear panel drawings)*

Ordering Options Rear Plate and Fiber Connector must be specified at time of order
Eg: Model +3RU + SC

Rear Plate Suffix

+3RU	3RU Rear Plate for use with 7700FR-C Multiframe
+1RU	1RU Rear Plate for use with 7701FR Multiframe
+SA	Standalone Enclosure (with power supply)

Connector Suffix

+SC	SC/PC
+ST	ST/PC*
+FC	FC/PC*

**Note: ST/PC & FC/PC connectors option is available on 'COMMON' and 'EXPANSION' ports only (SC/PC on remaining fiber I/O ports)*

Fiber Optic Patch Cable

CB-FP1M-SCPC	Single mode fiber cable, 1m, SC/PC male termination
CB-FP1M-STPC	Single mode fiber cable, 1m, ST/PC male termination
CB-FP5M-SCPC	Single mode fiber cable, 5m, SC/PC male termination
CB-FP5M-STPC	Single mode fiber cable, 5m, ST/PC male termination
CB-FP10M-SCPC	Single mode fiber cable, 10m, SC/PC male termination
CB-FP10M-STPC	Single mode fiber cable, 10m, ST/PC male termination

Enclosures

7700FR-C	3RU Multiframe which holds up to 15 single slot modules
7701FR	1RU Multiframe which holds up to 3 single or dual slot modules
S7701FR	Standalone enclosure

The 9000DWDM are bi-directional Multiplexors/De-multiplexors that combine/separate 32 or 40 DWDM wavelengths over a single fiber. The 9000DWDM are housed in an Evertz 1RU unit.

Features & Benefits

- Bi-directional mux/demux of 32 or 40 wavelengths in the C-Band DWDM spectrum (ITU-T G.694.1 compliant)
- 0.8nm (100GHz) channel spacing
- Passive design for any bit rate
- Low insertion loss to conserve system power
- High optical isolation for low crosstalk
- SC/PC, ST/PC, FC/PC connector options

**9000DWDM to be used ONLY in Single Mode Fiber applications*

Applications
- Multi-channel transport of video, audio, data, control in fiber limited applications
- Cost reduction exercises through fewer leased fibers
- Studio and Facility extension/expansion
- L-Band & IF Link transport
- STL and TSL Links
- Signal aggregation for outdoor and event coverage
- Signal aggregation for security and monitoring

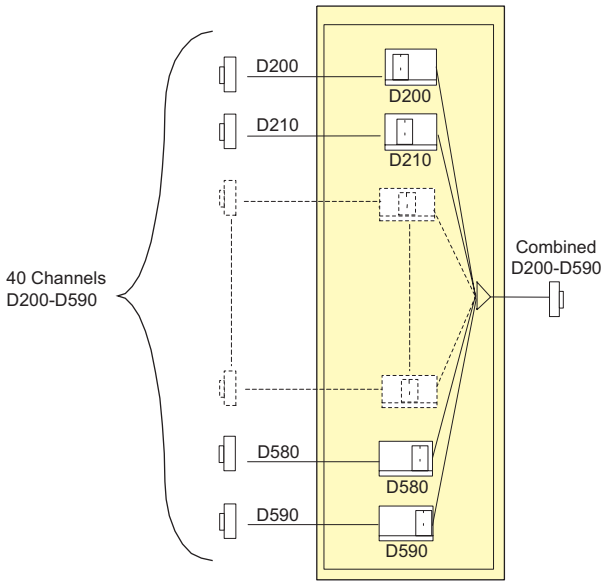

9000DWDM-M40

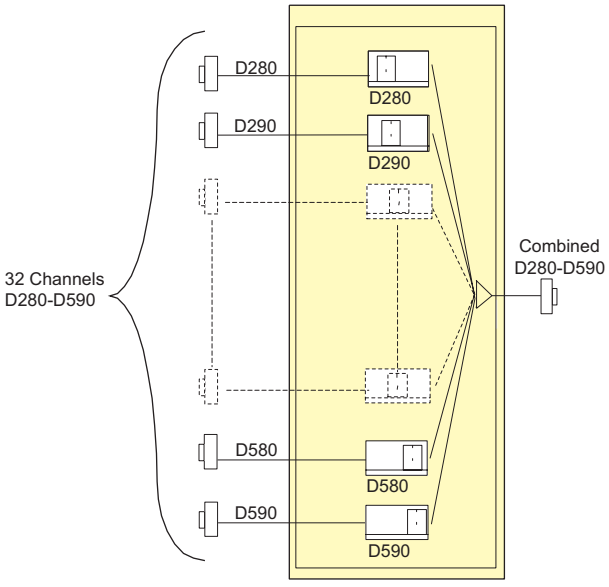

9000DWDM-M32

Specifications

Optical Input/Output:
Connector: SC/PC, ST/PC or FC/PC
Wavelength:
9000DWDM-32: ITU C28-C59 (1554.94-1530.33nm)
9000DWDM-40: ITU C20-C59 (1561.42-1530.33nm)
Channel Spacing: 0.8nm (100GHz)
Passband @ 0.5dB: ±0.11nm
Channel Uniformity: < 1.5dB
Isolation
Adjacent Channel: > 25dB
Non-Adjacent Channel: > 40dB

Directivity: > 40dB
Fiber Size: 9µm core/125µm overall
Return Loss: > 45dB
Max Optical Power: < 300mW (+25dBm)

Link Loss with Mux and Demux Combination:
9000DWDM-M32 & 9000DWDM-D32: < 8dB Maximum Loss
9000DWDM-M40 & 9000DWDM-D40: < 10dB Maximum Loss

Physical:
Dimensions: 19"W x 1.75"H x 18.75"D (483mm W x 45mm H x 477mm D)
Weight: 8lbs (3.5kg)

Ordering Information

Dense Wave Division Multiplexing Optical Modules

9000DWDM-M32	32 Ch DWDM Mux, 100Ghz spacing, 1RU enclosure
9000DWDM-M40	40 Ch DWDM Mux, 100Ghz spacing, 1RU enclosure
9000DWDM-D32	32 Ch DWDM Demux, 100Ghz spacing, 1RU enclosure
9000DWDM-D40	40 Ch DWDM Demux, 100Ghz spacing, 1RU enclosure

Ordering Options Fiber Connector must be specified at time of order
Eg: Model +SC

Connector Suffix

+SC	SC/PC
+ST32	ST/PC Fiber connectors on all ports for 9000DWDM-X32
+ST40	ST/PC Fiber connectors on all ports for 9000DWDM-X40
+FC32	FC/PC Fiber connectors on all ports for 9000DWDM-X32
+FC40	FC/PC Fiber connectors on all ports for 9000DWDM-X40

Fiber Optic Patch Cable

CB-FP1M-SCPC	Single mode fiber cable, 1m, SC/PC male termination
CB-FP1M-STPC	Single mode fiber cable, 1m, ST/PC male termination
CB-FP5M-SCPC	Single mode fiber cable, 5m, SC/PC male termination
CB-FP5M-STPC	Single mode fiber cable, 5m, ST/PC male termination
CB-FP10M-SCPC	Single mode fiber cable, 10m, SC/PC male termination
CB-FP10M-STPC	Single mode fiber cable, 10m, ST/PC male termination

7707BPX

2x1 Optical Bypass Protection Switch

The 7707BPX is a wide band 2x1 optical protection switch that provides auto-changeover functionality by detecting changes in the optical input power level.

The 7707BPX has integrated VistaLINK® technology for remote control and monitoring capability via SNMP. This provides the user with the ability to locally or remotely configure and monitor parameters such as module status, selected input, power level and switching threshold.

In the application of auto-changeover, the 7707BPX can be configured to have a MAIN input and a STANDBY input. In this configuration, it will automatically switch to the Standby input when the Main input power is weak or lost. It can also be configured to have auto or manual switch back to the Main input when the signal is re-established.

The 7707BPX occupies one card slot and can be housed in a 1RU frame which hold up to 3 modules or a 3RU frame which will hold up to 15 modules.

Features & Benefits

- Intelligent auto-switching with input power detection and user-definable thresholds
- Supports automatic or manual control via SNMP or GPI
- Fully hot-swappable from front of frame with no fiber disconnect/reconnect required
- Accepts any wavelength in the 1270nm to 1610nm range
- Supports single-mode fiber optic cable
- SC/PC, ST/PC or FC/PC fiber connector options
- Comprehensive signal and card status monitoring via four digit card edge display or remotely through SNMP and VistaLINK® capability

**7707BPX to be used ONLY in Single Mode Fiber applications*

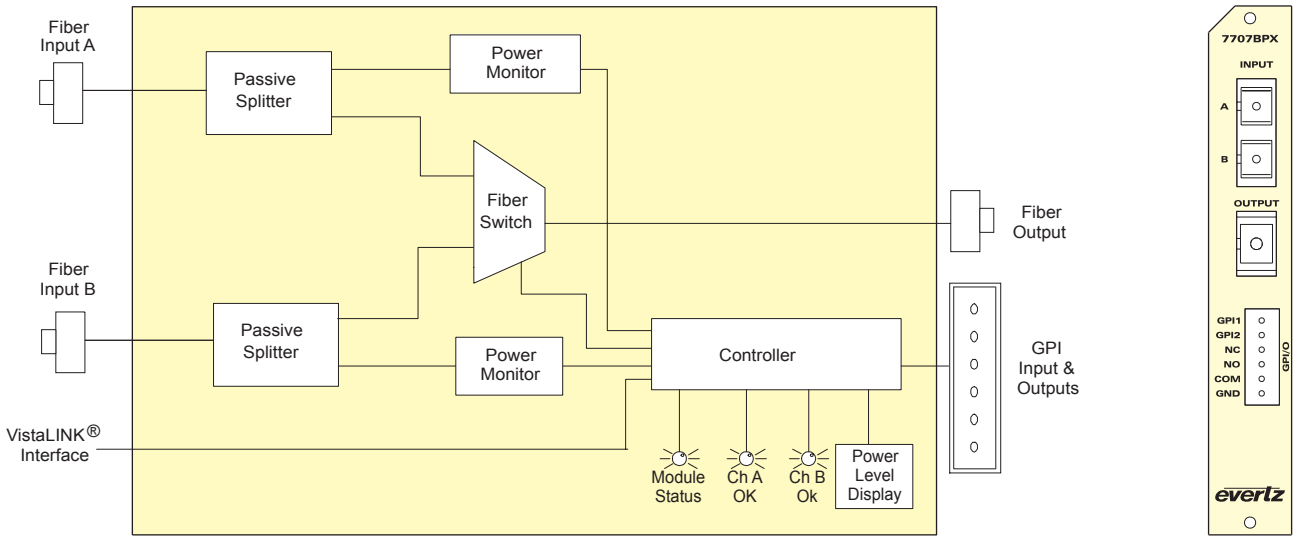

Specifications

Optical Input/Output:

Number:	3 Bi-directional optical signals
Connector:	SC/PC, ST/PC, FC/PC Female Housing
Insertion Loss:	< 3dB
Switch Time:	< 30ms
Max. Input Power:	5dBm
Input Optical Sensitivity:	-40dBm
Operating Wavelength:	1270nm to 1610nm
Fiber Size:	9µm core/125µm overall

General Purpose Inputs:

Number of Inputs:	2
Type:	Opto-isolated, active low with internal pull-ups to +5V
Connector:	2 pins plus ground on 6-pin terminal strip
Signal Level:	
+5V Pullup:	Low: -5 to +2.5V DC, High: 3.5 to 10V DC
+12V Pullup:	Low: -5 to +9.5V DC, High: 10.5 to 15V DC
Max Sink Current:	(input shorted to ground) 15 mA
Max Leakage Current for input High:	200µA

General Purpose Outputs:

Number of Outputs:	1
Type:	"Dry Contact" relay contacts - normally open & normally closed contact provided
Connector:	3 pins on 6-pin terminal strip

Electrical:

Voltage:	+12V DC
Power:	3W
EMI/RFI:	Complies with FCC Part 15, Class A EU EMC Directive

Physical:

Number of Slots:	1

Ordering Information

7707BPX	2x1 Optical Bypass Protection Switch

Ordering Options Rear Plate and Fiber Connector must be specified at time of order Eg. Model +3RU +SC

Rear Plate Suffix

+3RU	3RU Rear Plate for use with 7700FR-C Multiframe
+1RU	1RU Rear Plate for use with 7701FR Multiframe
+SA	Standalone Enclosure Rear Plate

Connector Suffix

+SC	SC/PC
+ST	ST/PC
+FC	FC/PC

Enclosures

7700FR-C	3RU Multiframe, which holds up to 15 single slot modules
7701FR	1RU Multiframe, which holds up to 3 single or dual slot modules
S7701FR	Standalone enclosure

The SRF1 and SRF3 are compact, high performance, multi-channel, passive splitter/combiner arrays, designed for expansion of RF routing systems and other applications requiring high-density, rackmount splitter packages. The wide pass bandwidth includes the extended L-band range. The SRF series may be used in any L-Band signal distribution system where multiple channels of passive 1x2 or 1x4 splitter/combiners are needed.

The module functions as a splitter or combiner depending on the RF connections. The SRF unit can be configured as a splitter by injecting an RF signal to the common port. The outputs will be a reduced amplitude replica of the input signal. Injecting RF signals into the combiner input ports (splitter outputs) results in the summation at the common port with reduced amplitude. The monitor port allows monitoring of the common port without interruption of the signal path.

SRF1 Front Panel • Common & Monitor Ports

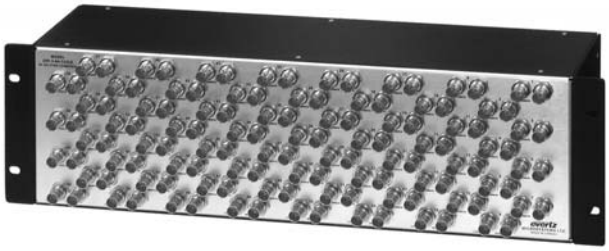

SRF3 Front Panel • Common & Monitor Ports

Features & Benefits

- Passes all signal modulation formats in the 40MHz-3000MHz frequency range
- Functions as a high-density passive splitter or combiner
- Completely passive design for high reliability
- Compact design, may be front or rear rack mounted
- Passes LNB power
- Monitor port allows for monitoring of Common port signal without interruption of signal path

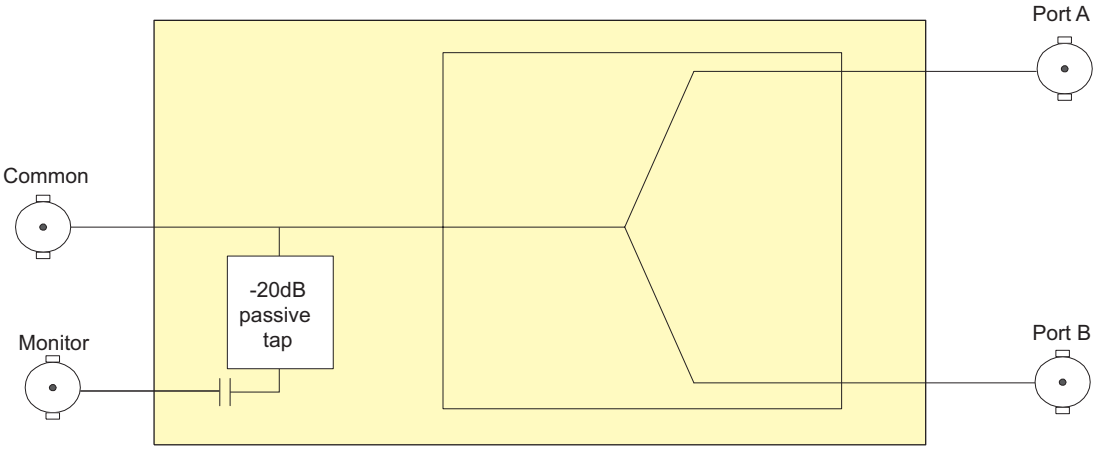

Specifications

Unit Specifications:

Frequency Range:	40MHz-3000MHz
Insertion Loss:	
1x2:	4.2 ±0.5dB
1x4:	7.5 ±0.75dB
Impedance:	75Ω
Isolation (channel-channel):	> 60dB
Connector:	BNC per IEC 60169-8 Amendment 2, (F type optional)
Return Loss (inputs & outputs):	250MHz-3000MHz > 15dB

SRF1 Series:

Number of Channels:	
SRF1-16-1x2:	16, 1x2s
SRF1-8-1x4:	8, 1x4s

SRF3 Series:

Number of Channels:	
SRF3-64-1x2:	64, 1x2s
SRF3-32-1x4	32, 1x4s

Monitor Port:

Connector:	BNC per IEC 60169-8 Amendment 2, (F type optional)
Level:	-20dB ± 2dB referenced to the Common Port

Physical:

SRF1 series:	19"W x 1.75"H x 5.5"D
SRF3 series:	19"W x 5.25"H x 5.5"D

Ordering Information

SRF1 Series

SRF1-16-1x2LB	16-channel 1x2 splitter/combiner in 1RU chassis
SRF1-8-1x4LB	8-channel 1x4 splitter/combiner in 1RU chassis

SRF3 Series

SRF3-64-1x2LB	64-channel 1x2 splitter/combiner in 3RU chassis
SRF3-32-1x4LB	32-channel 1x4 splitter/combiner in 3RU chassis

Ordering Options

+F75	"F" type connectors, 75Ω

7702SP2, 7702SP4, 7702SP2-LNB, 7703SP4-LNB

RF Passive Splitters

The 7702 series RF passive splitters provide inexpensive distribution of RF signals in a 1x2 or 1x4 configuration (designated by SP2 or SP4 in the part number). The operating frequency range is 40MHz to 2200MHz allowing both IF and L-band satellite signal distribution. When equipped with the "-LNB" option, DC power can be passed through any of the outputs to the input for LNB power (input frequency range limited to 400MHz-2200MHz). Diode protection ensures that no conflicts arise in the event that multiple connections provide DC power.

The 7702SP2 and 7702SP4 occupy one card slot and can be housed in a 1RU frame which will hold up to three modules, a 3RU frame which will hold up to 15 modules or a standalone enclosure.

Features & Benefits

- Passes all signal modulation formats in the 40-2200MHz frequency range (400MHz-2200MHz with -LNB option)
- Functions as a splitter or combiner
- Completely passive design for high reliability
- Fully hot-swappable from front of frame
- -LNB option passes DC power to LNB

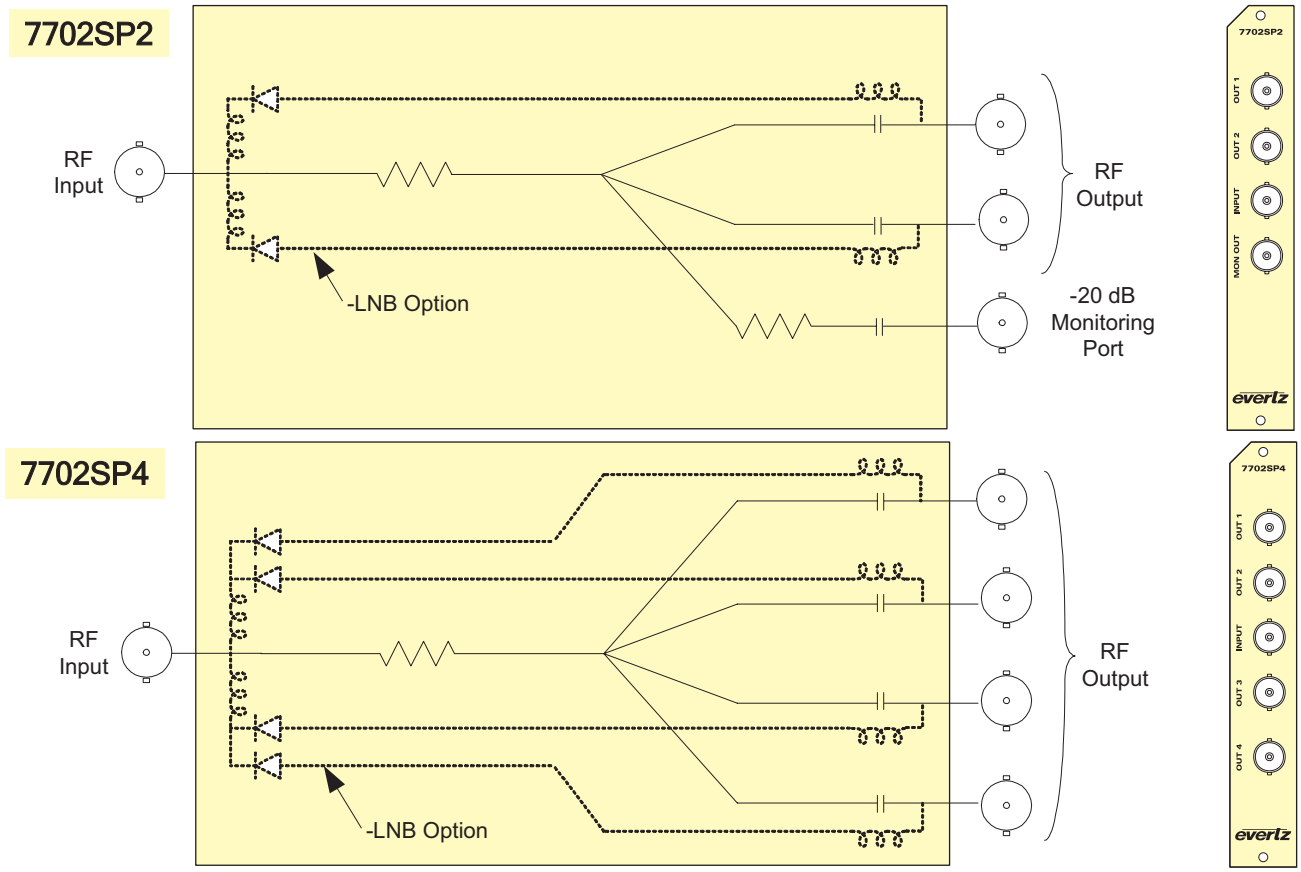

Specifications

RF Input:
Number of Inputs: 1
Connector: BNC, F type optional
I/O Impedance: 75Ω
Input Frequency Range:
40-2200MHz
-LNB Version: 400-2200MHz
Return Loss:
250MHz-2200MHz: > 12dB

RF Outputs:
Number of Outputs:
7702SP2: 2+1 Monitor
7702SP4: 4
Connector: BNC, F-Type optional
Insertion Loss:
7702SP2: 5 ±1dB
7702SP4: 8 ±1dB
Monitor: -20dB ±2dB referenced to the input port
I/O Impedance: 75Ω
Return Loss:
250MHz-2200MHz: > 12dB
Frequency Response:
± 1dB

Physical:
Number of slots: 1

Ordering Information

7702SP2	1x2 Passive RF Splitter
7702SP4	1x4 Passive RF Splitter
7702SP2-LNB	1x2 Passive RF Splitter, passes LNB power
7702SP4-LNB	1x4 Passive RF Splitter, passes LNB power

Ordering Options & Accessories
Rear Plate must be specified at time of order
Eg: Model +SC +3RU

Rear Plate Suffix:

+3RU	3RU rear plate for use with 7700FR-C Multiframe
+1RU	1RU rear plate for use with 7701FR Multiframe
+SA	Standalone Enclosure Rear Plate

Connector Suffix:

+F75	75Ω F type connectors

Enclosures

7700FR-C	3RU Multiframe which holds up to 15 single slot modules
7701FR	1RU Multiframe which holds up to 3 single or dual slot modules

CWDM Transmitter Ordering Options • 20nm Channel Grid - Based on ITU G.694.2

Laser Ordering Number (xx)	Wavelength (nm)	Transmitter Module (Example)
27	1270	7707EO27
29	1290	7707EO29
31	1310	7707EO31
33	1330	7707EO33
35	1350	7707EO35
37	1370	7707EO37
43	1430	7707EO43
45	1450	7707EO45
47	1470	7707EO47
49	1490	7707EO49
51	1510	7707EO51
53	1530	7707EO53
55	1550	7707EO55
57	1570	7707EO57
59	1590	7707EO59
61	1610	7707EO61

DWDM Transmitter Ordering Options • 100GHz/0.8nm Channel Grid - Based on ITU G.694.1

Laser Ordering Number (Dxxx)	ITU Channel Number	Frequency (GHz)	Wavelength (nm)	Transmitter Module (Example)
D200	20	192,000	1561.42	Contact Factory
D210	21	192,100	1560.61	Contact Factory
D220	22	192,200	1559.79	Contact Factory
D230	23	192,300	1558.98	Contact Factory
D240	24	192,400	1558.17	Contact Factory
D250	25	192,500	1557.36	7707EOD250
D260	26	192,600	1556.55	7707EOD260
D270	27	192,700	1555.75	7707EOD270
D280	28	192,800	1554.94	7707EOD280
D290	29	192,900	1554.13	7707EOD290
D300	30	193,000	1553.33	7707EOD300
D310	31	193,100	1552.52	7707EOD310
D320	32	193,200	1551.72	7707EOD320
D330	33	193,300	1550.92	7707EOD330
D340	34	193,400	1550.12	7707EOD340
D350	35	193,500	1549.32	7707EOD350
D360	36	193,600	1548.51	7707EOD360
D370	37	193,700	1547.72	7707EOD370
D380	38	193,800	1546.92	7707EOD380
D390	39	193,900	1546.12	7707EOD390
D400	40	194,000	1545.32	7707EOD400
D410	41	194,100	1544.53	Contact Factory
D420	42	194,200	1543.73	Contact Factory
D430	43	194,300	1542.94	Contact Factory
D440	44	194,400	1542.14	Contact Factory
D450	45	194,500	1541.35	Contact Factory
D460	46	194,600	1540.56	Contact Factory
D470	47	194,700	1539.77	Contact Factory
D480	48	194,800	1538.98	Contact Factory
D490	49	194,900	1538.19	Contact Factory
D500	50	195,000	1537.40	Contact Factory
D510	51	195,100	1536.61	Contact Factory
D520	52	195,200	1535.82	Contact Factory
D530	53	195,300	1535.04	Contact Factory
D540	54	195,400	1534.24	Contact Factory
D550	55	195,500	1533.47	Contact Factory
D560	56	195,600	1532.68	Contact Factory
D570	57	195,700	1531.90	Contact Factory
D580	58	195,800	1531.12	Contact Factory
D590	59	195,900	1530.33	Contact Factory
D600	60	196,000	1529.55	Contact Factory

7780TSM-IP, 7780TSM-ASI

MPEG2/H.264 IP & ASI Transport Stream Monitor

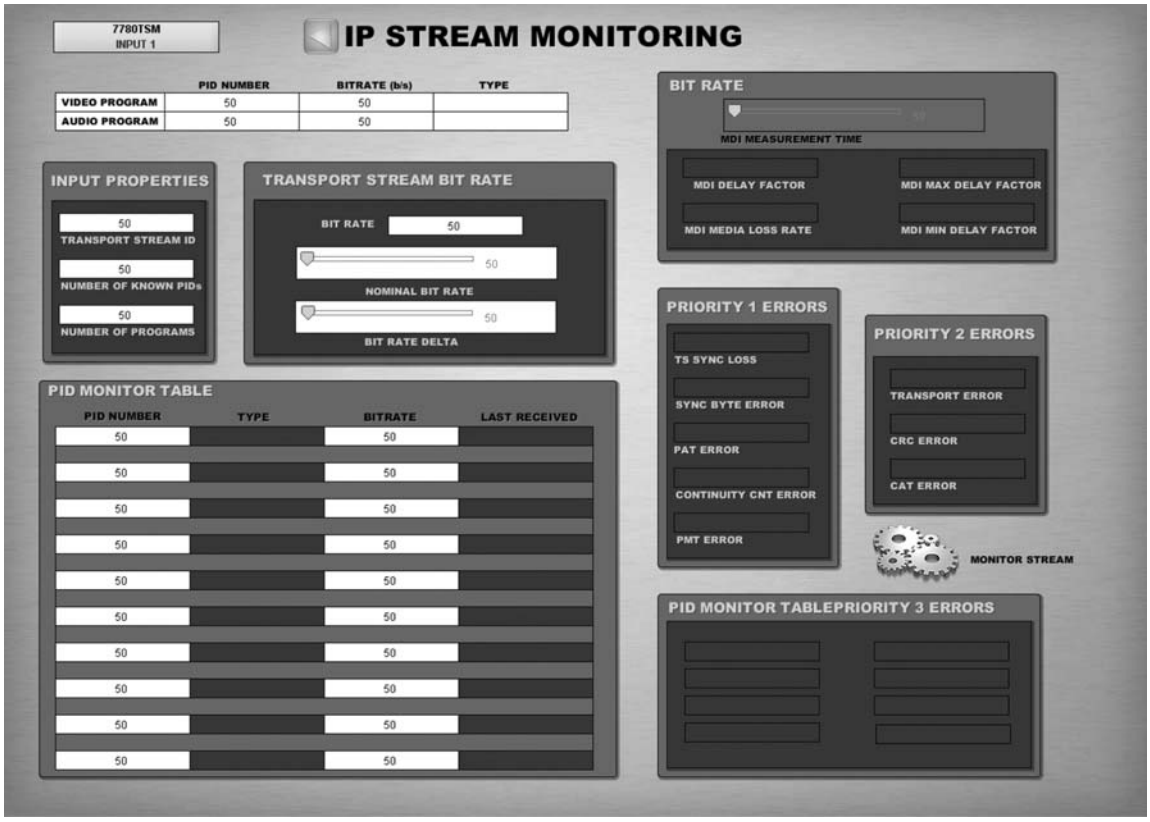

The 7780TSM line of remote probes is a complete embedded hardware based solution for compressed network monitoring. By monitoring the MPEG Transport Stream at strategic points within the distribution network, in conjunction with the industry leading VistaLINK® PRO NMS (Network Management System), the 7780TSM offers service providers the tools to continuously and effectively have the confidence that their MPEG-2/H.264 signals within any IPTV, Satellite, terrestrial or cable network is being delivered properly.

The 7780TSM supports the two most popular interfaces ASI and IP. With support for over 400Mb/s (on ASI), 200Mb/s (on IP) of total MPEG-2/H.264 traffic on a single 7780TSM, these probes can, for example, in no time separate encoder errors to network delivery errors allowing the operator to act quickly and avoid down time.

The industry leading Evertz VistaLINK® PRO NMS offers a new dimension to TS monitoring by allowing a graphical customization of any measurement performed and a quick viewing of the different points in the system. It makes the 7780TSM probe system a valuable system in any operational environment.

Features & Benefits

- 2 ASI inputs (7780TSM-ASI) or 1 IP input (7780TSM-IP)
- IGMP subscription and IP layer monitoring including MDI (7780TSM-IP)
- Transport Stream analysis:
  Presence, Bitrate analysis, table rate analysis
  TR101290 Level 1, level 2*, and partial level 3
- Complete TS and PID bitrate measurement from 100Kb/s to 200Mb/s with settable limits
- Display of Transport Stream tree
- Display of video resolution, audio type, etc.
- Matching of PID assignment with pre-define PID list and TSID verification

* Only PCR accuracy and PCR repetition rate supported at this time. No jitter measurement.

- Multicast stream redirect for decoding or detailed analysis of remote stream
- Up to 7 hot-swappable 7780TSM modules per chassis
- Fully Integrated with the Industry leading Evertz VistaLINK® PRO NMS
- Auto-Response Scripting Capability
- Comparing of same stream at different location in network
- SNMP Enabled (control and alarms for monitoring)
- Complete customization of status view and error report in VistaLINK® PRO

7780TSM-IP

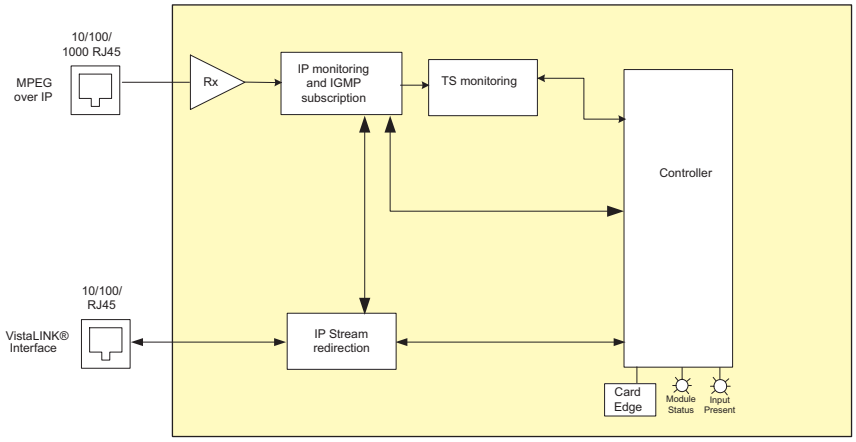

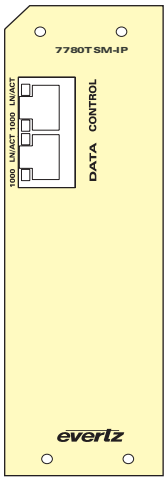

7780TSM-ASI

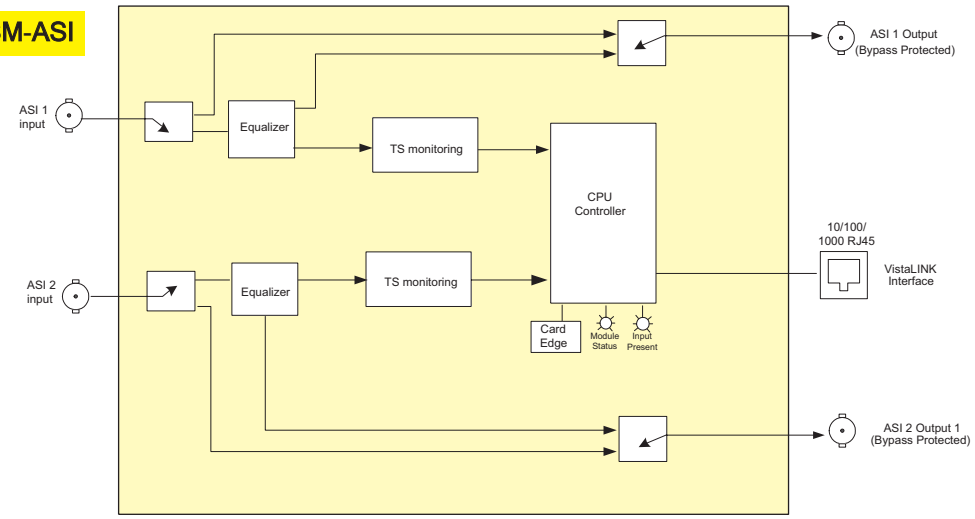

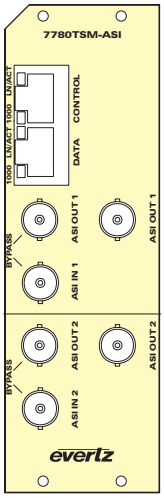

Specifications

Inputs and outputs:
- 2xASI input per DVB TR 101 891-270Mb/s (7780TSM-ASI)
  - Min ASI TS input bitrate 100kb/s (per input)
  - Max ASI TS input bitrate 213Mb/s (per input)
- 1xRJ45 input 10/100/1000 with 200Mb/s of MPEG over IP traffice (50 multicasts) (7780TSM-IP)
- 1xRJ45 10/100/1000 control port

Monitored parameters:
IP Measurements-(7780TSM-IP)
- MDI-Media Delivery Index DF: MLR (Delay Factor: Media Loss Rate)
- RTP Statistics

MPEG-2 TS measurement:s

TR101290 P1	TR101290 P2
1.1 TS_sync_loss	2.1 Transport_error
1.2 Sync_byte_error	2.2 CRC_error
1.3 Pat_error	2.3 PCR_error
1.4 Continuity_count_error	2.4 PCR_accuracy_error
1.5 PMT_error	2.5 PTS_error
	2.6 CAT_error

Table presence and repetition:
- DVB SI repetition error (NIT, SDT, EIT, RST, TDT)
- ATSC PSIP tables repetition error (MGT, TVCT, CVCT, EIT, RRT, STT)

Ordering Information

7780TSM-IP	MPEG2/H.264 IP Transport Stream Monitor
7780TSM-ASI	MPEG2/H.264 ASI Transport Stream Monitor

7780DLY-ASI

ASI Delay

The 7780DLY-ASI is a complete hardware-based solution that can delay a compressed stream on ASI for up to 16 seconds. As more providers are using different sources with various delays, such as satellite, fiber and off-air, they need to be able to match these streams by delaying them by multiple seconds in order to line up in time the different inputs.

Most broadcast equipment offers few milliseconds of built-in buffer, but in many cases it is not enough delay for stream matching.

The 7780DLY-ASI can delay a full ASI stream up to 213Mb/s. The delay is programmable and adjustable by 1ms increments from 0 to 16 seconds.

The 7780DLY-ASI fits in the 7700 series frame and offers signal input monitoring by sending SNMP traps to the industry leading VistaLINK® PRO.

Features & Benefits

- 1 ASI input 100kb/s to 213Mb/s and 2 ASI outputs
- Delay from few bytes to 16 seconds in 1ms increment
- Support 188 and 204 bytes packets (Autodetect)
- ASI input test includes:
  - Sync Byte error and Sync loss detection
  - Total Bitrate
  - Useful Bitrate
  - Null packet Bitrate
  - Continuity count error
  - List of active PIDs
- Controlled by VistaLINK® PRO or Card Edge
- Fully integrated with the industry leading Evertz VistaLINK® PRO NMS system
- OSD (On-Screen Display) on SDI output for status and configuration display
- 7 programmable preset delays controllable by GPI and VistaLINK® PRO
- Passive bypass for increased safety

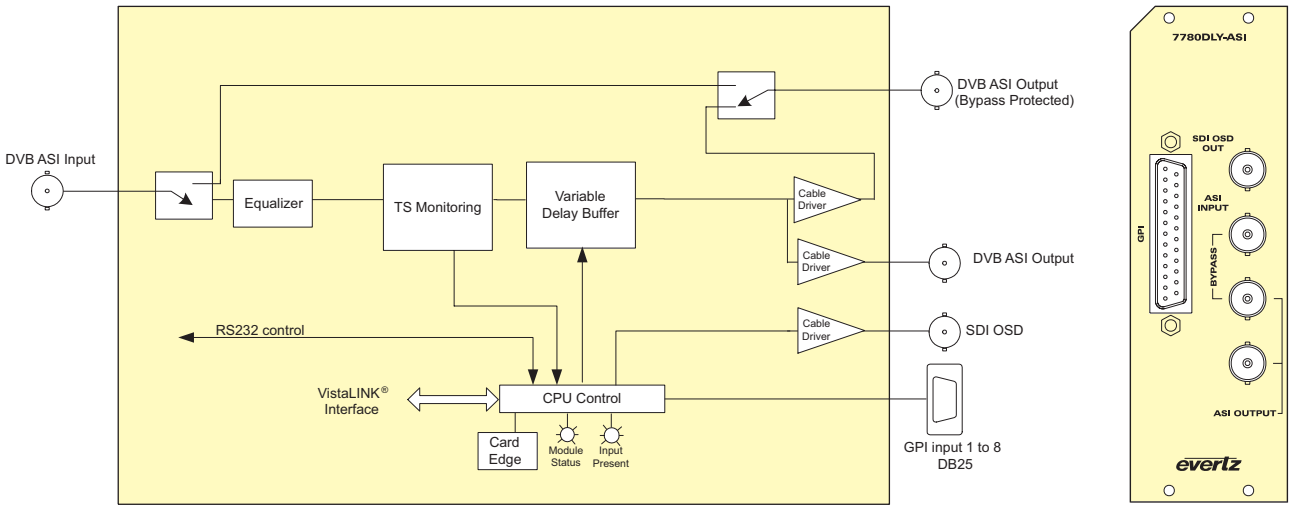

Specifications

ASI Input/Output:

Standard:	DVB TR101 891, 270Mb/s
Number of Inputs:	1
Number of Outputs:	1 (with relay bypass)
Bitrate:	100kb/s to 213Mb/s

Serial Video Output (OSD):

Number of Outputs:	1
Connector:	BNC per IEC 60169-8 Amendment 2
Signal Level:	800mV nominal
DC Offset:	0V ±0.5V
Rise and Fall Time:	200ps nominal (HD), 740ps nominal (SD)
Overshoot:	< 10% of amplitude
Return Loss:	> 15dB up to 1.5Gb/s (HD)
Wide Band Jitter:	< 0.2 UI

Electrical:

Voltage:	+12V DC
Power:	20W
EMI/RFI:	Complies with FCC Part 15, Class A EU EMC Directive

Physical:

7700 frame mounting:	2 slots
7701 frame mounting:	1 slot

Stand Alone Enclosure:

Dimensions:	14" L x 4.5" W x 1.9" H (355mm L x 114mm W x 48mm H)
Weight:	Approx. 1.5lbs (0.7kg)

Ordering Information

7780DLY-ASI	ASI Delay
Ordering Options	Rear Plate must be specified at time of order Eg: Model + 3RU

Rear Plate Suffix

+3RU	3RU Rear Plate for use with 7700FR-C Multiframe
+1RU	1RU Rear Plate for use with 7701FR Multiframe
+SA	Standalone Enclosure Rear Plate

Enclosures

7700FR-C	3RU Multiframe which holds up to 15 single slot modules
7701FR	1RU Multiframe which holds up to 3 single or dual slot modules
S7701FR	Standalone enclosure

This page is intentionally left blank

7772MFD-HD

HD JPEG 2000 Decompression CODEC

The 7772MFD-HD, HDTV Decompression Codec utilizes JPEG 2000 technology to convert the 270Mb/s data input signal from the 7772MFC-HD into a SMPTE 292M (1.485Gb/s) component serial digital stream with embedded or separate AES audio. The 7772MFD-HD also re-embeds VANC data that existed in the original HD-SDI stream. The 7772MFD-HD supports 1080i/59.94, 1080i/50, 720p/59.94 and 720p/50 field rates. Card functions are controlled from the card edge or through VistaLINK® interface.

The 7772MFD-HD occupies two card slots and can be housed in a 1RU frame that will hold up to 3 modules, a 3RU frame that will hold up to 7 modules or a standalone enclosure which will hold 1 module.

Features & Benefits

- Supports 1080i/59.94, 1080i/50, 720p/59.94 and 720p/50 field rates
- Automatic detection of 1080i/720p active lines
- Handles up to four groups of embedded AES audio
- Audio delay processing to match video decompression delay
- Re-embeds original VANC data in outgoing HD-SDI stream
- Eight separate stereo AES unbalanced outputs
- Fully hot-swappable from front of frame
- VistaLINK® - capable offering remote monitoring, control and configuration capabilities via SNMP
- VistaLINK® is available when modules are used with the 3RU 7700FR-C frame and a 7700FC VistaLINK® Frame Controller module in slot 1 of the frame

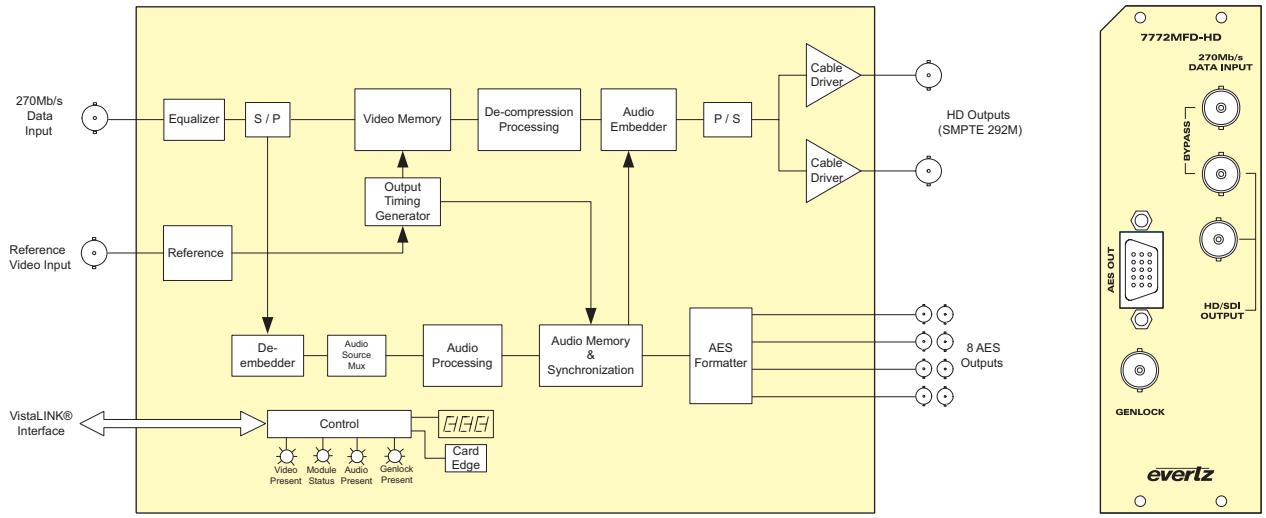

Specifications

270Mb/s Data Input:

Standard:	SMPTE 259M-C (270Mb/s)
Number of Inputs:	1
Connector:	BNC per IEC 60169-8 Amendment 2
Signal Level:	800mV nominal
DC Offset:	0V ±0.5V
Return Loss:	>15dB @ 270Mb/s

HD Serial Video Output:

Standard:	SMPTE 292M (1080i/59.94, 1080i/50, 720p/54.94, 720p/50)
Number of Outputs:	2
Connector:	BNC per IEC 60169-8 Amendment 2
Signal Level:	800mV nominal
DC Offset:	0V ±0.5V
Rise and Fall Time:	< 200ps nominal
Overshoot:	< 10% of amplitude
Wide Band Jitter:	< 0.2 UI

AES Audio Outputs:

Standard:	SMPTE 276M, single ended AES, Dolby E
Number of Outputs:	8
Connector:	BNC per IEC 60169-8 Amendment 2
Sampling Rate:	48khz
Impedance:	75Ω
Resolution:	24-bit

Reference Input:

Connector:	1 BNC per IEC 60169-8 Amendment 2
Type:	HD Tri-level, NTSC/PAL Color Black (1V p-p) or composite bi-level sync (525i/59.94 or 625i/50) 300mV
Termination:	75Ω jumper selectable

270Mb/s Data Input to HDSDI Output Delay:

Delay:	≤ 4 frames interlaced ≤ 8 frames progressive

Electrical:

Voltage:	+12V DC
Power:	15W
EMI/RFI	Complies with FCC Part 15, Class A EU EMC Directive

Physical:

7700 frame mounting:	2 slots
7701 frame mounting:	1 slot

Ordering Information

7772MFD-HD	HD JPEG 2000 Decompression Codec
Ordering Options	Rear Plate and Fiber Connector must be specified at time of order Eg. Model +3RU +SC

Rear Plate Suffix

+3RU	3RU Rear Plate for use with 7700FR-C Multiframe
+1RU	1RU Rear Plate for use with 7701FR Multiframe
+SA	Standalone Enclosure Rear Plate

Enclosures

7700FR-C	3RU Multiframe, which holds up to 15 single slot modules
7701FR	1RU Multiframe, which holds up to 3 single or dual slot modules
S7701FR	Standalone enclosure

The 7772MFC-HD, HDTV Compression Codec utilizes JPEG 2000 technology to encode one SMPTE 292M (1.485Gb/s) serial digital video signal with up to four AES groups of embedded or separate audio, into one 270Mb/s compliant data output stream. The 7772MFC-HD also preserves VANC data in the incoming HD-SDI stream and transports this across the 270Mb/s interface. Automatic detection and support of 1080i/59.94, 1080i/50, 720p/59.94 and 720p/50 field rates is provided. Card functions are controlled from the card edge or through the VistaLINK® interface.

The 7772MFC-HD occupies two card slots and is housed in a 1RU frame which holds up to 3 modules, a 3RU frame which will hold up to 7 modules or a standalone enclosure which will hold 1 module.

Features & Benefits

- Supports 1080i/59.94, 1080i/50, 720p/59.94, 720p/50 field rates
- Automatic detection of 1080i, 720p active lines
- Accepts up to four groups of embedded or separate AES audio
- No compression applied to AES audio streams
- Preserves VANC from input HD-SDI stream
- Fully hot-swappable from front of frame
- VistaLINK® - capable offering remote monitoring, control and configuration capabilities via SNMP
- VistaLINK® is available when modules are used with the 3RU 7700FR-C frame and a 7700FC VistaLINK® Frame Controller module in slot 1 of the frame

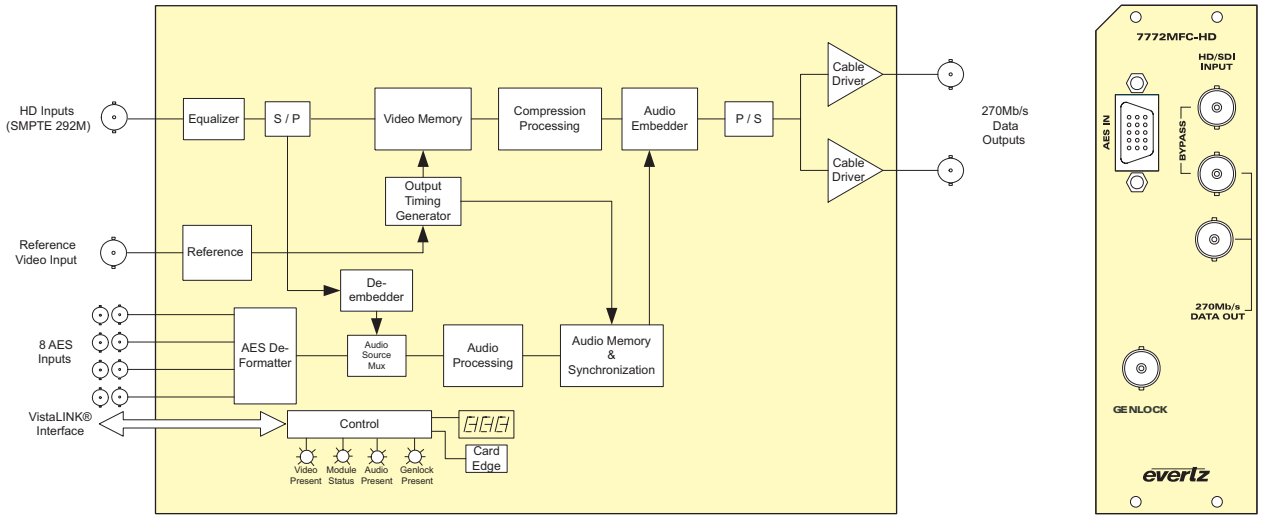

Specifications

HD Serial Video Input:

Standard:	SMPTE 292M, (1080i/59.94, 1080i/50, 720p/59.94, 720p/50)
Number of Inputs:	1
Connector:	BNC per IEC 60169-8 Amendment 2
Equalization:	Automatic to 100m @ 1.5Gb/s with Belden 1694A or equivalent

270Mb/s Data Output:

Standards:	SMPTE 259M-C (270Mb/s)
Number of Outputs:	2
Connector:	BNC per IEC 60169-8 Amendment 2
Signal Level:	800mV nominal
DC Offset:	0V ±0.5V
Rise and Fall Time:	900ps nominal
Overshoot:	< 10% of amplitude
Return Loss:	> 15dB up to 270Mb/s
Wide Band Jitter:	< 0.2 UI

AES Audio Inputs:

Standard:	SMPTE 276M, single ended AES
Number of Inputs:	8
Signal Level:	200mv to 1100mv
Connector:	BNC per IEC 60169-8 Amendment 2
Sampling Rate:	48kHz
Impedance:	75Ω balanced
Return Loss:	> 20dBm
Resolution:	24-bit

Reference Input:

Connector:	1 BNC per IEC 60169-8 Amendment 2
Type:	HD Tri-level, NTSC/PAL Color Black (1V p-p) or composite bi-level sync (525i/59.94 or 625i/50) 300mV
Termination:	75Ω jumper selectable

HD SDI Input to 270Mb/s Data:

Delay:	≤ 4 frames interlaced ≤ 8 frames progressive

Electrical:

Voltage:	+12V DC
Power:	15W
EMI/RFI	Complies with FCC Part 15, Class A EU EMC Directive

Physical:

7700 frame mounting:	2 slots
7701 frame mounting:	1 slot

Ordering Information

7772MFC-HD	HD JPEG 2000 Compression Codec
Ordering Options	Rear Plate and Fiber Connector must be specified at time of order Eg. Model +3RU +SC

Rear Plate Suffix

+3RU	3RU Rear Plate for use with 7700FR-C Multiframe
+1RU	1RU Rear Plate for use with 7701FR Multiframe
+SA	Standalone Enclosure Rear Plate

Enclosures

7700FR-C	3RU Multiframe, which holds up to 15 single slot modules
7701FR	1RU Multiframe, which holds up to 3 single or dual slot modules
S7701FR	Standalone enclosure

7772MFX-HD

JPEG2000 SD & HD Encoder and Decoder

The 7772MFX-HD is a JPEG2000 SD & HD encoder and decoder card. The 7772MFX-HD is the most versatile JPEG2000 codec on the market. It offers variable JPEG2000 compression rate on SDI or ASI. The 7772MFX-HD can be reconfigured on the fly to be used as a JPEG2000 encoder or JPEG2000 decoder. The 7772MFX-HD also supports pass through of up to 4 AES groups (8 pairs) of audio embeddeded or can do the embedding of the audio. The card functions are controlled from the card edge or though the VistaLINK® interface.

The 7772MFX-HD is the perfect product to back haul or archive high quality contribution video with low end-to-end delay. The JPEG2000 offers superior quality than MPEG-2 codec without the MPEG-2 blocking artifacts.

Features & Benefits

- Supports 1080i/59.94, 1080i/50, 720p/59.94, 720p/50, 480i/29.97, 576i/25
- Automatic detection of input format
- Handles up to 8 embedded AES pairs of audio (Pass through, no compression)
- Built-in audio embedder/de-embedder
- All VANC & HANC passthrough
- SDI framing with embedded uncompressed audio
- ASI framing with JPEG2000 encapsulated as pipe data
- VistaLINK® capability is available when modules are used with the 3RU 7700FR-C frame and a 7700FC VistaLINK® Frame Controller module in slot 1 of the frame

Additional Encoder Features

- Variable video Bitrate from 20 to 160Mb/s for SD and 100 to 160Mb/s for HD
- Offers control over encoding parameters for optimizing encoding depending on application

Additional Decoder Features

- Audio delay processing to match video decompression delay
- Eight separate stereo unbalanced outputs

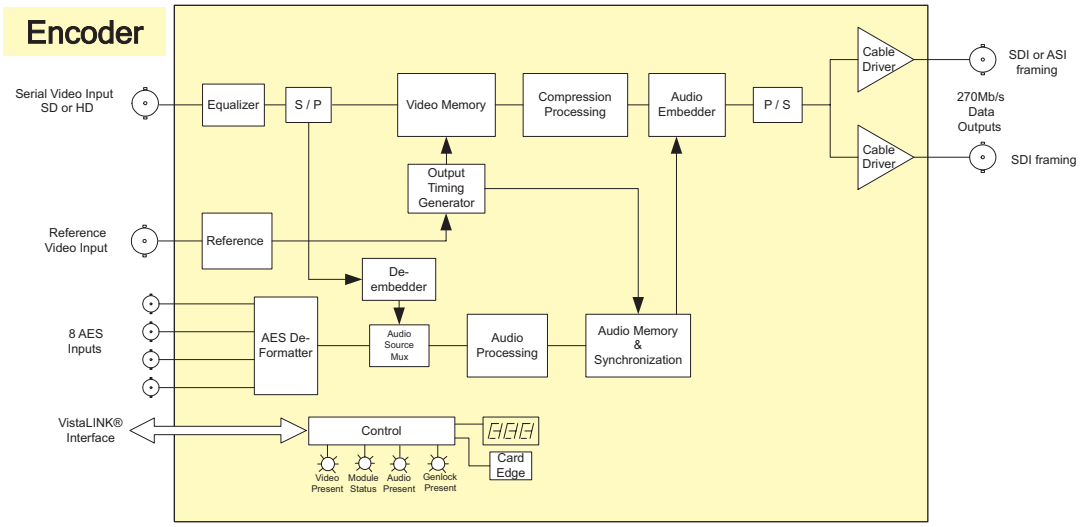

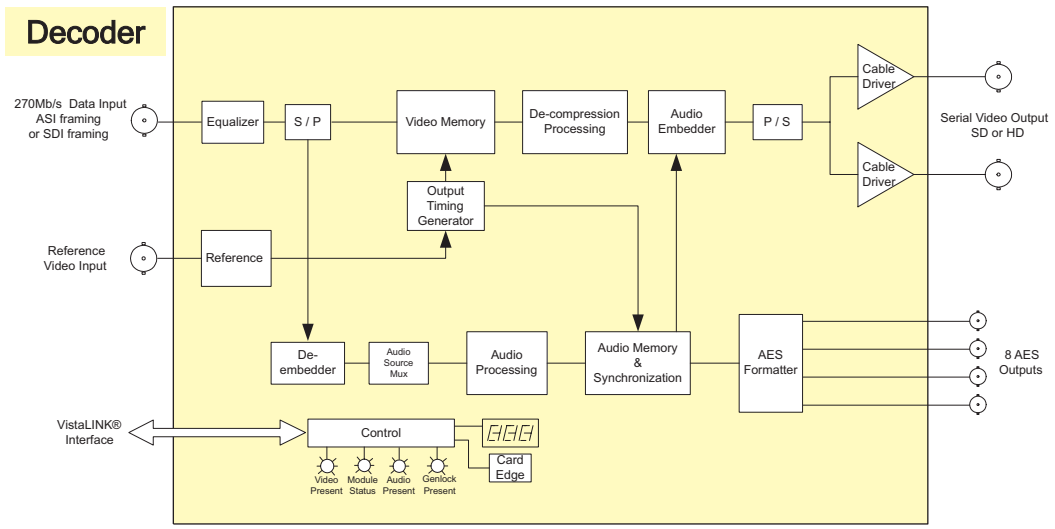

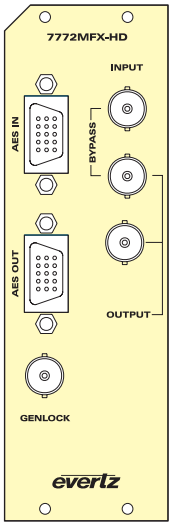

Specifications

Serial Video Inputs/Outputs:
Standard:
HD: SMPTE 292M, (1080i/59.94, 1080i/50, 720p/59.94, 720p/50)
SD: SMPTE 259M (480i/29.97, 576i/25)
Number of Inputs: 1 (Encoder)
Number of Outputs: 2 (Decoder)
Connector: BNC per IEC 60169-8 Amendment 2

JPEG2000 Over SDI Inputs/Outputs:
Standard: SMPTE 259M-C (270Mb/s)
Number of Inputs: 1 (Decoder)
Number of Outputs: 2 (Encoder)
Connector: BNC per IEC 60169-8 Amendment 2
Signal Level: 800mV nominal

JPEG2000 Over ASI Inputs/Outputs:
Standard: DVB TR 101 891-270Mb/s
Number of Inputs: 1 (Decoder)
Number of Outputs: 1 (Encoder)
Min ASI TS output bitrate 20Mb/s
Max total ASI TS output bitrate 231Mb/s

AES Audio Inputs/Outputs:
Standard: SMPTE 276M, single ended AES
Number: 8
Sampling Rate: 48kHz
Impedance: 75Ω balanced
Embedding: SMPTE 272M

Encoding parameters:
Encoding: CBR or capped VBR mode
Bitrate setting: 20 to 160Mbits/s for SD
100 to 160Mbits/s for HD
Control of codec parameters:
Video Bit rate separately adjustable for luma and chroma
JPEG2000 Progression Style
Output Code Stream Format
Control: VistaLINK® offers setup and remote monitoring of the card
Card edge control for easy setup

Reference Input:
Connector: 1 BNC per IEC 60169-8 Amendment 2
Type: HD Tri-level, NTSC/PAL Color Black (1V p-p) or composite bi-level sync (525i/59.94 or 625i/50) 300mV
Termination: 75Ω jumper selectable

Encoding/Decoding Delay:
Total Delay: 4 frames interlaced
6 frames progressive

Electrical:
Voltage: +12V DC
Power: 15W
EMI/RFI Complies with FCC Part 15, Class A
EU EMC Directive

Physical:
7700 frame mounting: 2 slots

Ordering Information

7772MFX-HD	JPEG 2000 SD & HD Encoder and Decoder
Ordering Options	Rear Plate and Fiber Connector must be specified at time of order Eg. Model +3RU +SC

Rear Plate Suffix

+3RU	3RU Rear Plate for use with 7700FR-C Multiframe
+1RU	1RU Rear Plate for use with 7701FR Multiframe
+SA	Standalone Enclosure Rear Plate

Enclosures

7700FR-C	3RU Multiframe, which holds up to 15 single slot modules
7701FR	1RU Multiframe, which holds up to 3 single or dual slot modules
S7701FR	Standalone enclosure

7772MFX-HD-IP

JPEG2000 HD Encoder and Decoder

The 7772MFX-HD-IP is a JPEG2000 HD encoder and decoder card. The 7772MFX-HD-IP is the most versatile JPEG2000 codec on the market over IP network. It offers variable JPEG2000 compression rate on IP. The 7772MFX-HD-IP can be reconfigured on the fly to be used as a JPEG2000 encoder or JPEG2000 decoder. The 7772MFX-HD-IP offers redundant FEC protected IP outputs for high reliability.

The 7772MFX-HD-IP also supports pass through of up to 4 AES groups (8 pairs) of audio embeddeded or can do the embedding of the audio. The card functions are controlled from the card edge or though the VistaLINK® interface.
The 7772MFX-HD-IP is the perfect product to back haul or archive high quality contribution video with low end-to-end delay. The JPEG2000 offers superior quality than MPEG-2 codec without the MPEG-2 blocking artifacts.

Features & Benefits

- Supports 1080i/59.94, 1080i/50, 720p/59.94, 720p/50
- Automatic detection of input format
- Handles up to 8 embedded AES pairs of audio (Pass through, no compression)
- Built-in audio embedder/de-embedder
- All VANC & HANC passthrough
- Standard MPEG over IP framing (JPEG2000 over TS over IP)
- Standard Pro MPEG FEC (Code of practice #3 release 2)
- VistaLINK® capability is available when modules are used with the 3RU 7700FR-C frame and a 7700FC VistaLINK® Frame Controller module in slot 1 of the frame

Additional Encoder Features
- Variable video Bitrate from 80 to 160Mb/s for HD
- Offers control over encoding parameters for optimizing encoding depending on application

Additional Decoder Features
- Audio delay processing to match video decompression delay
- Eight separate stereo unbalanced outputs

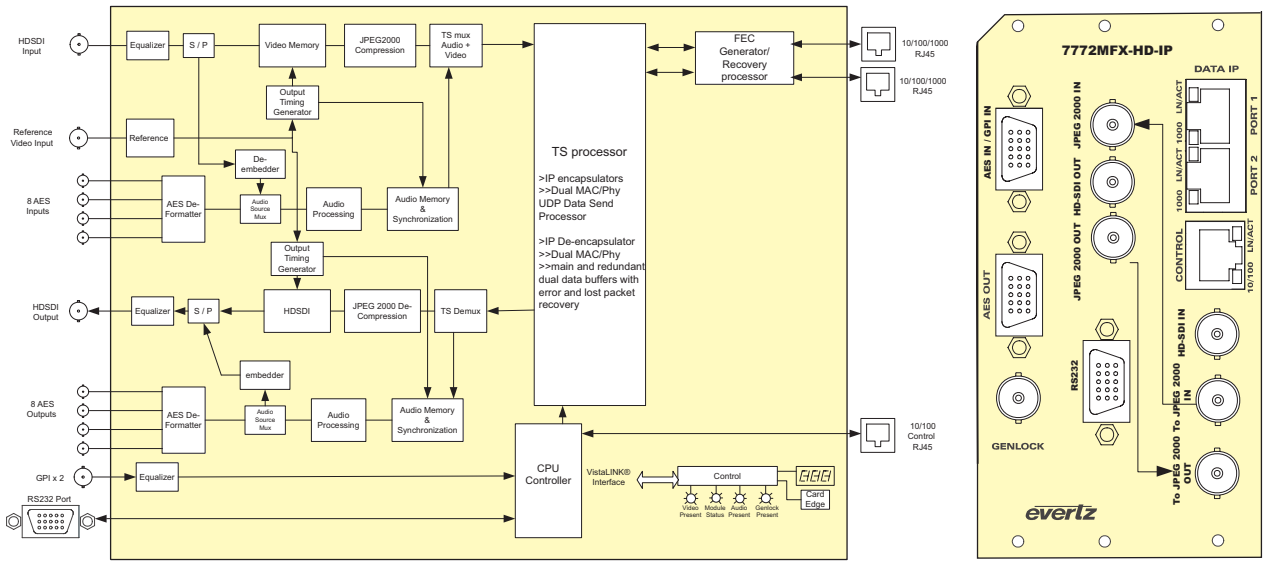

Specifications

Serial Video Inputs/Outputs:
Standard:
HD: SMPTE 292M, (1080i/59.94, 1080i/50, 720p/59.94, 720p/50)
Number of Inputs: 1 (Encoder)
Number of Outputs: 1 (Decoder)
Connector: BNC per IEC 60169-8 Amendment 2

JPEG2000 Over IP Inputs/Outputs:
Standard: 2 x MPEG over IP connections
Full MPEG COP3 FEC encoding and decoding
Encapsulation: MAC 802.3>IPV4>(RTP)>UDP>MPEG2TS

AES Audio Inputs/Outputs:
Standard: SMPTE 276M, single ended AES
Number: 8
Sampling Rate: 48kHz
Impedance: 75Ω balanced
Embedding: SMPTE 272M

Encoding parameters:
Encoding: CBR or capped VBR mode
Bitrate setting: 100 to 160Mbits/s
Control of codec parameters:
Video Bit rate separately adjustable for luma and chroma
JPEG2000 Progression Style
Output Code Stream Format
Control: VistaLINK® offers setup and remote monitoring of the card
Card edge control for easy setup

Reference Input:
Connector: 1 BNC per IEC 60169-8 Amendment 2
Type: HD Tri-level, NTSC/PAL Color Black (1V p-p) or composite bi-level sync (525i/59.94 or 625i/50) 300mV
Termination: 75Ω jumper selectable

Encoding/Decoding Delay:
Total Delay: 4 frames interlaced
6 frames progressive

Electrical:
Voltage: +12V DC
Power: 15W
EMI/RFI Complies with FCC Part 15, Class A
EU EMC Directive

Physical:
7700 frame mounting: 3 slots

Ordering Information

7772MFX-HD-IP JPEG 2000 HD Encoder and Decoder with IP output

Ordering Options Rear Plate and Fiber Connector must be specified at time of order
Eg. Model +3RU +SC

Rear Plate Suffix
+3RU 3RU Rear Plate for use with 7700FR-C Multiframe

Enclosures
7700FR-C 3RU Multiframe, which holds up to 15 single slot modules

The 7750TG-TS Test Signal Generator provides a cost-effective method of generating SMPTE 310M and ASI test signals. The 7750TG-TS is ideal for checking signal path integrity, or to determine system performance over varying cable lengths. The 7750TG-TS generates test signals in either SMPTE 310M or DVB-ASI transport stream formats.

The 7750TG-TS provides an analog genlock input that allows you to synchronize the test signals to your plant horizontal and vertical timing.

Features & Benefits

- SMPTE 310M and ASI outputs
- ATSC and MPEG-2 Main Level Main Profile structures multiple bit rates in ASI output mode
- Multiple video test signals, motion and non-motion, each is a fixed loop of GOPs
- All appropriate tables for ATSC and DVB supported
- Gen locks to bi-level or color black - clock or phase lock possible
- Card edge toggle switch selects test signal
- On-screen setup menu
- Composite analog output with On-Screen Menu Display on gray
- 8 position DIP switch selects output format
- 2 output drivers
- Tally output upon loss of gen lock
- Card edge LEDs indicate gen lock presence, and module status

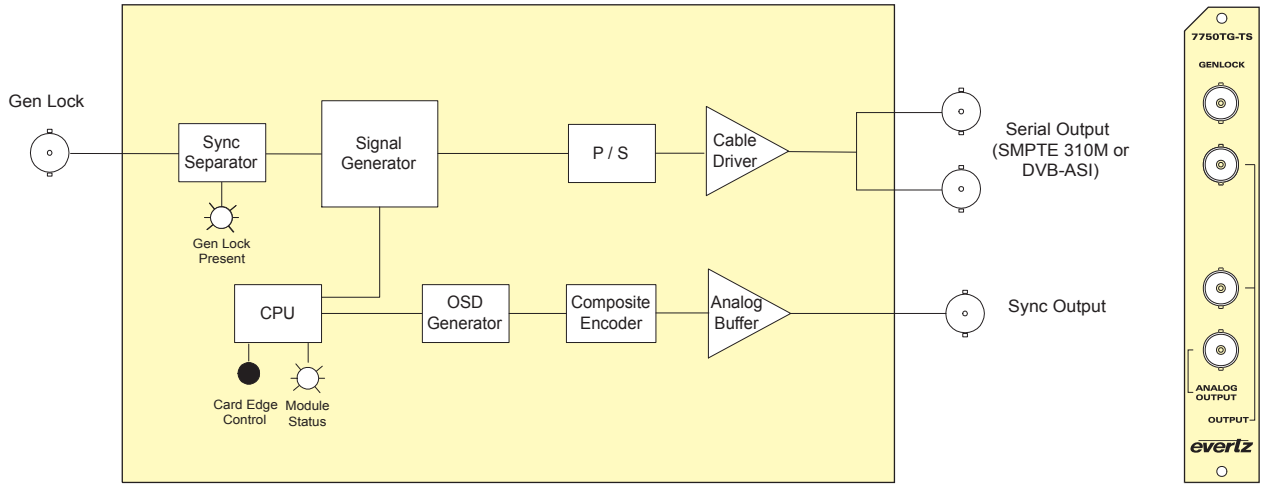

Specifications

Genlock Input:

Type:	Menu selectable - depends on output video format NTSC or PAL Color Black 1V p-p Composite Bi-level sync (525i) 300mV
Connector:	1 BNC per IEC 60169-8 Amendment 2
Termination:	75Ω (jumper selectable)

Serial Transport Stream Outputs:

Standard:	SMPTE 310M (19.4Mb/s) or DVB ASI (15 to 50Mb/s) (switch selectable)
Number of Outputs:	2
Connector:	BNC per IEC 60169-8 Amendment 2
Signal Level:	800mV nominal
DC Offset:	0V ±0.5V
Rise and Fall Time:	740ps nominal
Overshoot:	< 10% of amplitude
Return Loss:	> 15dB up to 270Mb/s
Wide Band Jitter:	< 0.2 UI

Analog Video Output:

Standard:	NTSC (SMPTE 170M)
Number of Outputs:	1
Connector:	BNC per IEC 60169-8 Amendment 2
Signal Level:	1V nominal

Electrical:

Voltage:	+12V DC
Power:	6W
EMI/RFI:	Complies with FCC Part 15, Class A EU EMC Directive

Physical:

Number of slots:	1

Ordering Information

7750TG-TS	SMPTE 210M/DVB-ASI Transport Stream Generator
Ordering Options	Rear Plate and Fiber Connector must be specified at time of order Eg. Model +3RU +SC

Rear Plate Suffix

+3RU	3RU Rear Plate for use with 7700FR-C Multiframe
+1RU	1RU Rear Plate for use with 7701FR Multiframe
+SA	Standalone Enclosure Rear Plate

Enclosures

7700FR-C	3RU Multiframe, which holds up to 15 single slot modules
7701FR	1RU Multiframe, which holds up to 3 single or dual slot modules
S7701FR	Standalone enclosure

7751TG2-HD

Dual HD Test Signal Generator with Embedded Audio

The 7751TG2-HD Test Signal Generator provides a cost-effective method of generating 1.5Gb/s HDTV 4:2:2 and 4:4:4 test signals. The 7751TG2-HD is ideal for checking signal path integrity, or to determine system performance over varying cable lengths. The 7751TG2-HD generates test signals in a wide variety of SMPTE 292M video formats. In single link mode, the 7751TG2-HD outputs a 4:2:2 black signal on two outputs and the selected 4:2:2 test signal on the remaining two outputs. In dual link mode, the 7751TG2-HD outputs a 4:4:4 test signal on two dual-link 4:4:4 outputs. The 7751TG2-HD provides an analog genlock input that allows you to synchronize the test signals to your plant horizontal and vertical timing.

Separate audio tones can be embedded into each channel of the four embedded audio groups. The user can select which of the audio groups the tones will be embedded into. In dual link mode, the selected audio groups will be embedded into each link. The Audio level is fixed at -20dB full scale.

VistaLINK® offers remote monitoring, control and configuration capabilities via Simple Network Management Protocol (SNMP) giving the flexibility to manage operations, including signal monitoring and module configuration from SNMP-capable control systems (Manager or NMS).

Features & Benefits

- Wide variety of 1080i, 1035i, 1080p, 480p and 720p output formats
- 8 position DIP switch selects output format, single or dual link and genlock reference
- Card edge toggle switch selects test signal
- Selectable gen lock input format - bi-level or tri-level sync, color black
- Embedded audio tones for 4 groups selectable audio group assignment
- Closed caption test messages
- 2 black outputs, 2 test gen. outputs in 4:2:2, 2 dual link test gen outputs in 4:4:4
- On-screen display of test signal names
- On-screen setup menu
- Tally output upon loss of gen lock
- Card edge LEDs indicate gen lock presence, module fault and audio signal presence on the output
- SMPTE 334M - EIA 708 advanced captioning test packet
- VistaLINK® - capable offering remote control and configuration capabilities via SNMP (using VistaLINK® PRO, 9000NCP or 9000NCP2 Network Control Panel) is available when modules are used with the 3RU 7700FR-C frame and a 7700FC VistaLINK® Frame Controller module in slot 1 of the frame

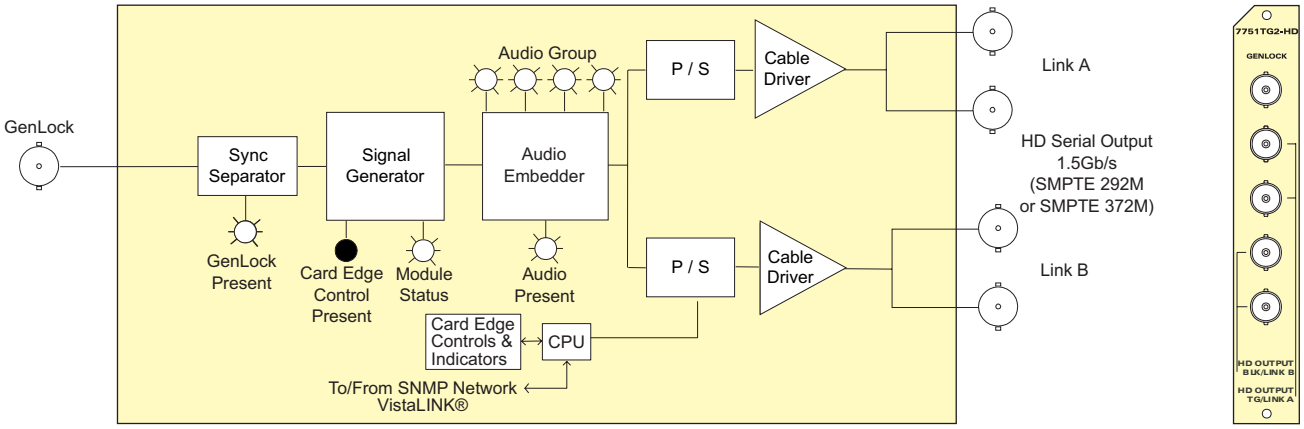

Specifications

Gen Lock Input:

Type:	Menu selectable - depends on output video format HD Tri-level Sync NTSC or PAL Color Black 1V p-p Composite Bi-level sync (525i or 625i) 300 mV
Connector:	BNC per IEC 60169-8 Amendment 2
Termination:	75Ω (jumper selectable)

HD Serial Video Outputs:

Standard:	SMPTE 292M, 4:2:2 YCBCR (single link) SMPTE 372M, 4:4:4 YCBCR or 4:4:4 GBRA (dual link)
Number of Outputs:	
Single Link Mode:	2 outputs of Black video 2 outputs of selected test signal
Dual Link Mode:	2 dual link outputs of selected test signal

Embedded Audio:	Up to 4 groups in one audio group as specified in SMPTE 299M. Selectable tone frequencies (from 60Hz to 10kHz) and audio group. Audio can be embedded on either or both links. Audio Level is set to -20dB Full Scale.
Source ID:	User-programmable on-screen 15 character source ID message - selectable position. On-screen message can be displayed on either or both links
Connectors:	4 BNC per IEC 60169-8 Amendment 2
Signal Level:	800mV nominal
V Phasing:	Infinite lines
H Phasing:	Infinite samples
DC Offset:	0V ±0.5V
Rise & Fall Time:	200ps nominal
Overshoot:	<10% of amplitude
Wide Band Jitter:	< 0.2 UI

Electrical:

Voltage:	+12V DC
Power:	6W
EMI/RFI:	Complies with FCC Part 15, Class A EU EMC Directive

Physical:

7700 or 7701 frame mounting:

Number of slots:	1

Stand Alone Enclosure:

Dimensions:	14"L x 4.5"W x 1.9"H (355 mm L x 114 mm W x 48 mm H)
Weight:	approx. 1.5lbs (0.7kg)

Ordering Information

7751TG2-HD	Dual HD Test signal Generator with embedded audio
Ordering Options	Rear Plate and Fiber Connector must be specified at time of order Eg. Model +3RU +SC

Rear Plate Suffix

+3RU	3RU Rear Plate for use with 7700FR-C Multiframe
+1RU	1RU Rear Plate for use with 7701FR Multiframe
+SA	Standalone Enclosure Rear Plate

Enclosures

7700FR-C	3RU Multiframe, which holds up to 15 single slot modules
7701FR	1RU Multiframe, which holds up to 3 single or dual slot modules
S7701FR	Standalone enclosure

7751TG2-CF-HD

HD /SD-SDI Test Signal Generator with Trouble Slide

The 7751TG2-CF-HD Test Signal Generator provides a cost-effective method of generating 270Mb/s SDTV 4:2:2 and 1.5Gb/s HDTV 4:2:2 and 4:4:4 test signals. The 7751TG2-CF-HD is ideal for checking signal path integrity, or to determine system performance over varying cable lengths. The 7751TG2-CF-HD generates test signals in a wide variety of SMPTE 292M and SMPTE 259M video formats. In single link mode, the 7751TG2-CF-HD outputs a 4:2:2 black signal on two outputs and the selected 4:2:2 test signal on the remaining two outputs. In dual link mode, the 7751TG2-CF-HD outputs a 4:4:4 test signal on two dual-link 4:4:4 outputs. The 7751TG2-CF-HD provides an analog genlock input that allows you to synchronize the test signals to your plant horizontal and vertical timing.

The 7751TG2-CF-HD provides downloadable bitmaps for trouble or test slides. Customers may store their own designed bitmaps (trouble slides, test slides, or test signals) into a directory structure on the compact flash. The module allows users to output one trouble slide on a pair of outputs and another trouble slide on the second pair of outputs. The 7751TG2-CF-HD comes with a 128MB compact flash.
Separate audio tones or user created WAV files can be embedded into each channel of two of the four embedded audio groups. The user can select which of the audio groups the tones will be embedded into. In dual link mode, the selected audio groups will be embedded into each link. The Audio level is fixed at -20dB full scale.

Features & Benefits

- Wide variety of 1080i, 1035i, 1080p, 480p, 720p, 525i and 625i output formats
- Compact flash for user-created bitmaps (trouble slides, test slides, or test signals)
- Two user-created bitmaps are sent individually on outputs
- User created WAV files can be sent in the embedded audio groups
- 8 position DIP switch selects output format, single or dual link and genlock reference
- Card edge toggle switch selects test signal
- Selectable gen lock input format - bi-level or tri-level sync, color black
- Embedded audio tones for 4 groups selectable audio group assignment
- SMPTE 334M - CEA-708 advanced captioning test packet
- 2 black outputs, 2 test gen. outputs
- On-screen display of test signal names
- On-screen setup menu
- Card edge LEDs indicate gen lock presence, module fault and audio signal presence on the output

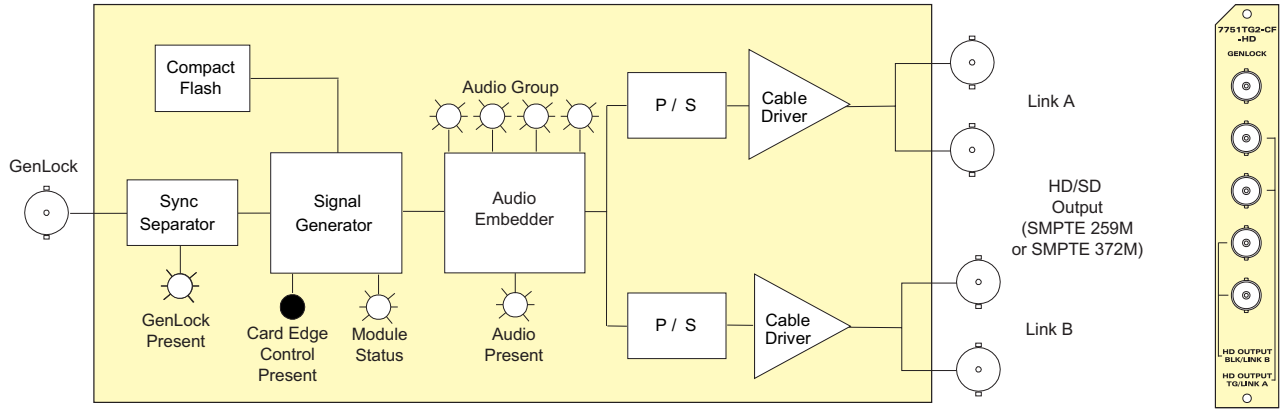

Specifications

Gen Lock Input:

Type:	Menu selectable - depends on output video format HD Tri-level Sync NTSC or PAL Color Black 1V p-p Composite Bi-level sync (525i or 625i) 300mV
Connector:	BNC per IEC 60169-8 Amendment 2
Termination:	75Ω (jumper selectable)

Serial Video Outputs:

Standard:	SMPTE 259M-C, SMPTE 292M, 4:2:2 YCBCR (single link) SMPTE 372M, 4:4:4 YCBCR or 4:4:4 GBRA (dual link)
Number of Outputs:	
Single Link Mode:	2 outputs of Black video 2 outputs of selected test signal
Dual Link Mode:	2 dual link outputs of selected test signal
Embedded Audio:	Up to 4 groups in one audio group as specified in SMPTE272M or 299M Selectable tone frequencies (from 60Hz to 10kHz) and audio group. Audio can be embedded on either or both links. Audio Level is set to -20dB Full Scale
Source ID:	User-programmable on-screen 15 character source ID message - selectable position. On-screen message can be displayed on either or both links
Connectors:	4 BNC per IEC 60169-8 Amendment 2
Signal Level:	800mV nominal
V Phasing:	Infinite lines
H Phasing:	Infinite samples
DC Offset:	0V ±0.5V
Rise and Fall Time:	200ps nominal (HD) 740ps nominal (SD)
Overshoot:	< 10% of amplitude
Wide Band Jitter:	< 0.2 UI

Electrical:

Voltage:	+12V DC
Power:	6W
EMI/RFI:	Complies with FCC Part 15, Class A EU EMC Directive

Physical:

7700 or 7701 frame mounting:	
Number of slots:	1

Stand Alone Enclosure:

Dimensions:	14"L x 4.5"W x 1.9"H (355mm L x 114mm W x 48mm H)
Weight:	approx. 1.5lbs (0.7kg)

Ordering Information

7751TG2-CF-HD	HD/SD-SDI Test Signal Generator with Trouble Slide
Ordering Options	Rear Plate and Fiber Connector must be specified at time of order Eg. Model +3RU +SC

Rear Plate Suffix

+3RU	3RU Rear Plate for use with 7700FR-C Multiframe
+1RU	1RU Rear Plate for use with 7701FR Multiframe
+SA	Standalone Enclosure Rear Plate

Enclosures

7700FR-C	3RU Multiframe, which holds up to 15 single slot modules
7701FR	1RU Multiframe, which holds up to 3 single or dual slot modules
S7701FR	Standalone enclosure

7751SRG-HD

HD Tri-Level Sync Generator

The 7751SRG-HD generates various analog bi-level & tri-level sync signals for both HD and SD applications. The 7751SRG-HD provides an analog genlock input that allows you to synchronize the sync signals to your plant horizontal and vertical timing.

The 7751SRG-HD generates all analog sync signals defined by SMPTE 274M (1080i/p) and SMPTE 296M (720p) as well as those required for NTSC, PAL and slow PAL (625i/48) applications. Sync signals generated for NTSC, PAL and slow PAL applications are sync signals only and do not incorporate color burst signals.

The four independent sync outputs can be configured to output different sync signals. The common combinations of HDTV and SD analog sync outputs can be selected via card edge control.

In conjunction with the 7700ADA Analog Distribution Amplifier and the 7751TG2-HD HDTV Test Signal Generator, this module will fulfill all of your slave sync generation requirements (See the PKG7752RGTS-HD system brochure for details on our HDTV Reference Generator Test Set System applications).

Features & Benefits

- NTSC or PAL colour black gen lock or free-runs with no gen lock reference
- Phase adjustment of outputs with respect to gen lock input
- Selectable frame rate divisor of 1 or 1/1.001
- Wide variety of 1080i, 1035i, 1080p, 720p and NTSC/PAL/slow PAL sync output sync signals (excluding burst)
- HSDL tri level sync for 2K data transfers
- 4 separate analog sync signal outputs
- 6Hz or 1Hz TTL pulse shows relationship between HD & SD Sync outputs
- 8 position DIP switch selects combinations of sync signal available
- Card edge LEDs indicate gen lock presence, module fault
- VistaLINK® - capable offering remote control and configuration capabilities via SNMP (using VistaLINK® PRO, 9000NCP or 9000NCP2 Network Control Panel) is available when modules are used with the 3RU 7700FR-C frame and a 7700FC VistaLINK® Frame Controller module in slot 1 of the frame

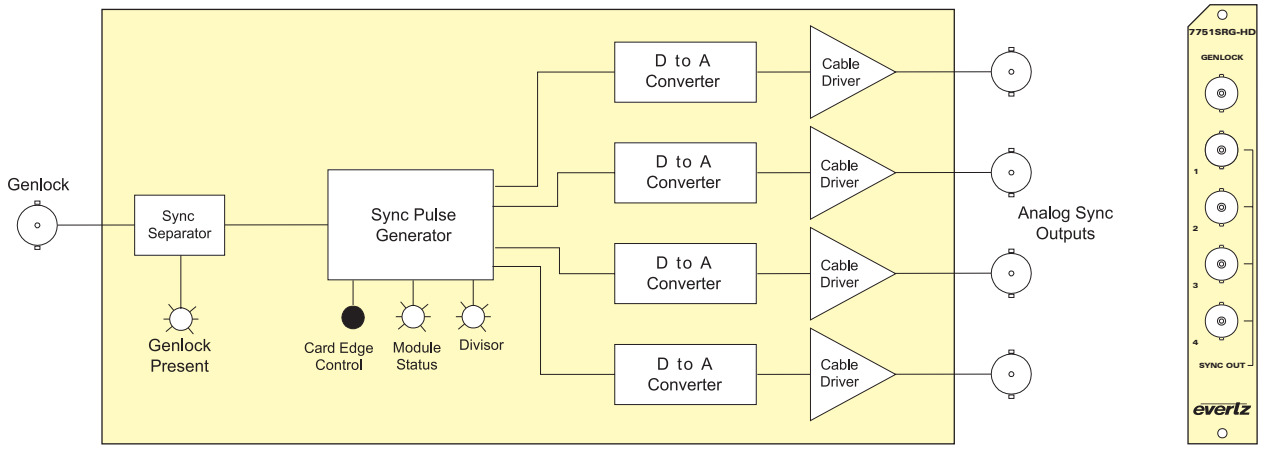

Selectable Sync Output Options

	Output 1	Output 2	Output 3	Output 4
1	1080i/60	1080p/24sF	625i/48	6Hz Pulse
2	1080i/50	1080p/24sF	625i/48	1Hz Pulse
3	1080p/30	1080p/24sF	625i/48	6Hz Pulse
4	1080p/25	1080p/24sF	625i/48	1Hz Pulse
5	1080p/24	1080p/24sF	625i/48	625i/48
6	1080p/24sF	1080p/24sF	625i/48	625i/48
7	720p/60	1080p/24sF	625i/48	6Hz Pulse
8	1035i/60	1080p/24sF	625i/48	6Hz Pulse
9	1080i/60	720p/60	525i/59.94	525i/59.94
10	1080i/60 V Drive	1080p/24sF	625i/48	6Hz Pulse
1/1.001 Multiple Set Via DIP Switch Where Applicable (See 7751SRG-HD manual for more switch settings)				

Specifications

Genlock Input:
Type: NTSC or PAL Color Black 1V p-p Composite Bi-level sync(525i or 625i) 300mV
Connector: 1 BNC per IEC 60169-8 Amendment 2
Termination: 75Ω (jumper selectable)

Analog Sync Outputs:
Number of Outputs: 4
Standard: SMPTE 274M, 296M, NTSC, PAL, 6Hz TTL, HDSL (selectable as per above table)
NTSC/PAL signals are sync signals only (no burst)
Connectors: 4 BNC per IEC 60169-8 Amendment 2
Signal Level: HD Sync outputs: 600mV nominal tri-level
SD Sync outputs: 300mV nominal bi-level
6Hz output: TTL

Electrical:
Power: +12V DC
Voltage: 6W
EMI/RFI: Complies with FCC Part 15, Class A, EU EMC Directive.

Physical:
Number of Slots: 1

Ordering Information

7751SRG-HD HD Tri-Level Sync Generator

Ordering Options Rear Plate and Fiber Connector must be specified at time of order
Eg. Model +3RU +SC

Rear Plate Suffix
+3RU 3RU Rear Plate for use with 7700FR-C Multiframe
+1RU 1RU Rear Plate for use with 7701FR Multiframe
+SA Standalone Enclosure Rear Plate

Enclosures
7700FR-C 3RU Multiframe, which holds up to 15 single slot modules
7701FR 1RU Multiframe, which holds up to 3 single or dual slot modules
S7701FR Standalone enclosure

The 7750TG Test Signal Generator provides a cost-effective method of generating 270Mb/s serial digital test signals. The 7750TG is ideal for checking signal path integrity, monitor alignment or to determine system performance over varying cable lengths. The 7750TG generates a wide variety of industry standard test signals in 525 line and 625 line SMPTE 259M-C video formats and offers four 270Mb/s outputs. Error detection and handling (EDH) codes are embedded on all the outputs to allow you to verify the performance of your digital signal paths.

The 7750TG provides an analog genlock input that allows you to synchronize the test signals to your plant horizontal and vertical timing.

Separate audio tones can be embedded into each channel of one of the four embedded audio groups. The user can select which of the audio groups the tones will be embedded into. The audio level is fixed at -20dB full scale.

Features & Benefits

- 525 line and 625 line formats
- Card edge toggle switch selects test signal
- On-screen display of test signal names
- 4 embedded audio tones, selectable audio group assignment
- 4 output drivers
- On-screen text message can be used for source identification
- On-screen setup menu
- Card edge LEDs indicate genlock presence and module health

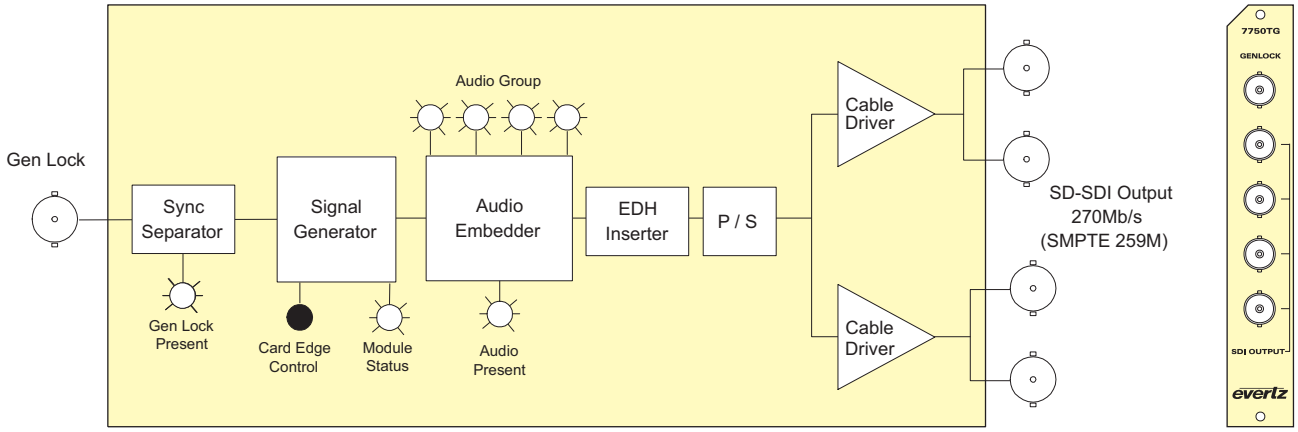

Specifications

Genlock Input:

Type:	NTSC or PAL color black 1V p-p Composite Bi-level sync (525 Line or 625 Line) 300mV
Connector:	1 BNC per IEC 60169-8 Amendment 2
Termination:	75Ω (jumper selectable)

Serial Video Output:

Standard:	SMPTE 259M-C (270Mb/s)
Embedded Audio:	Up to 4 tones in one audio group as specified in SMPTE 272M. Selectable tone frequencies (from 60Hz to 10kHz) and audio group. Audio level is set to 20dB full scale
Number of Outputs:	4
Connectors:	4 BNC per IEC 60169-8 Amendment 2
Signal Level:	800mV nominal
DC Offset:	0V ±0.5V
Rise and Fall Time:	740ps nominal
Overshoot:	< 10% of amplitude
Wide Band Jitter:	< 0.2 UI

Electrical:

Voltage:	+12V DC
Power:	6W
EMI/RFI:	Complies with FCC Part 15, Class A, EU EMC Directive

Physical:

Number of Slots:	1

Ordering Information

7750TG	SD-SDI Test Signal Generator
Ordering Options	Rear Plate and Fiber Connector must be specified at time of order Eg. Model +3RU +SC

Rear Plate Suffix

+3RU	3RU Rear Plate for use with 7700FR-C Multiframe
+1RU	1RU Rear Plate for use with 7701FR Multiframe
+SA	Standalone Enclosure Rear Plate

Enclosures

7700FR-C	3RU Multiframe, which holds up to 15 single slot modules
7701FR	1RU Multiframe, which holds up to 3 single or dual slot modules
S7701FR	Standalone enclosure

400FR

Compact High Density Balanced Audio Distribution Frame

Specifications

Electrical:
AC Mains Input: Auto ranging, 100 to 240V AC, 50/60Hz
Maximum Operating Current:
2.6 A (@ 120V AC), 1.4 A (@ 240V AC)
Maximum Power Consumption:
200W
Maximum Module Load:
160W (10W per slot)
Power Supply Configuration
Dual, redundant, separate AC inlets
Connector: IEC 60320 - 1 per power supply
Fuses: 4 amp, 250 volt time delay 5x20 mm. - 2 per power supply
Safety: CSA Listed to CSA C22.2 No. 60065-03, UL 60065-03
IEC 60065-(2001-12) 7th Edition
Complies with CE Low voltage Directive 93/68/EEC
EMC: Complies with FCC part 15, class A
Complies with EU EMC directive 89/336/EEC

Physical:
Height: 5.25" (133mm)
Width: 19" (483mm)
Depth: 9.5" (368mm)
Module Capacity: 16 slots
Weight: Approx 17lbs (7.7kg) with 2 power supplies, no slots occupied
Approx. 32lbs (14.5kg) with 2 power supplies all slots occupied

Certification:
Safety: CSA Listed
Complies with CE Safety Directive
EMC: Complies with FCC part 15, Class A
EU EMC Directive
Signal Connections: 3-pin removable terminal strips, balanced connection (10 per slot)

Status Indicators: PSU status LED,
Local Error/Failure LED

Tally Output Connector:
4-pin terminal, relay N/O, N/C for status/fault alarm
2A, 12.5VDC max

Temperature: 0-40°C optimal performance
0-50°C operating

Ordering Information

400FR	Compact High Density Balanced Audio Distribution Frame

Accessories
+4PS Redundant power supply option for 400FR

The 400ADA-AUD Analog Audio Distribution Amplifier is a general-purpose 1x9 amplifier for distributing balanced analog audio signals. It can be operated with either differential or single ended inputs and offers a wide range of gain adjustment to handle a wide variety of input signals. The 400ADA-AUD is housed in the 3RU 400FR frame that will hold up to 16 modules.

Features & Benefits

- Differential and single ended input (automatic single ended to differential conversion)
- High impedance inputs
- Low impedance outputs
- Wide gain adjustment range
- High common mode range and common mode rejection ratio
- Very high SNR
- Very low THD+N
- VistaLINK® capable for remote monitoring via SNMP (using VistaLINK® PRO) when installed in 400FR frame

Card Edge LEDs
- Module status/Local Fault
- Power supply status

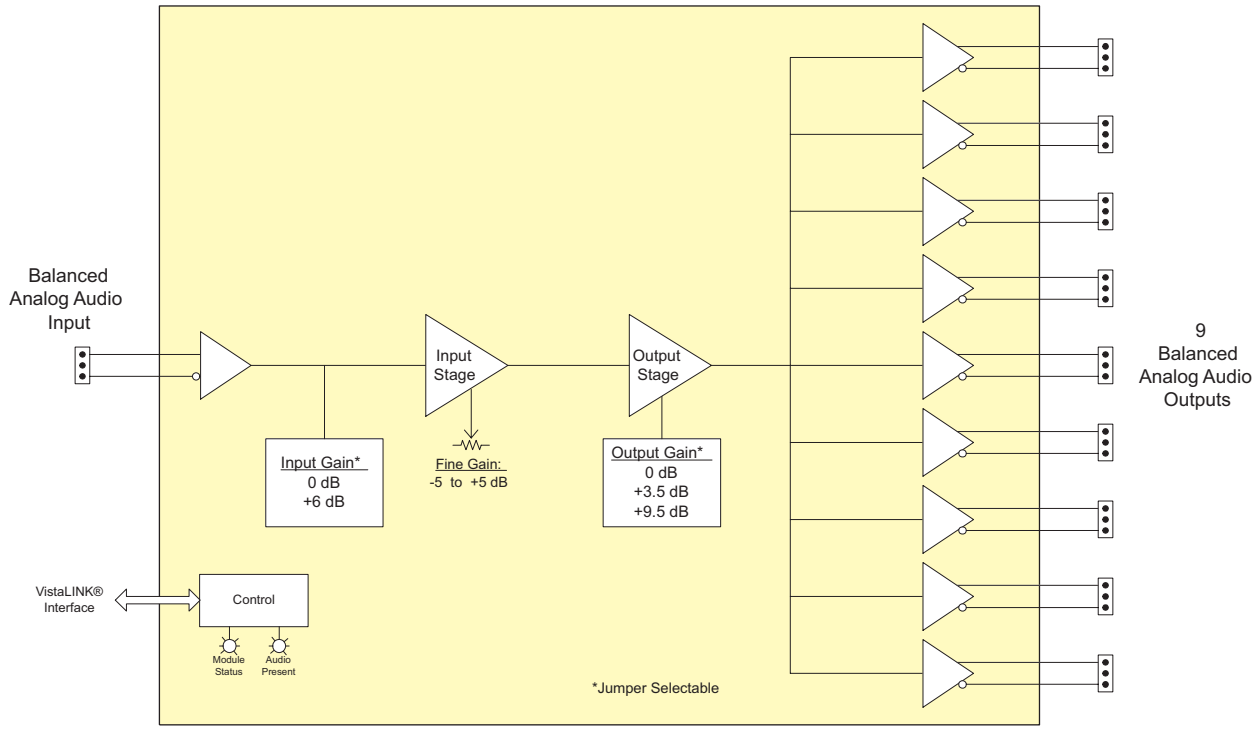

Specifications

Analog Audio Input:

Standards:	Any analog audio signal
Number of inputs:	1 (Balanced or Single ended)
Connector:	3-pin removable terminal strips
Input step gain:	0dB or +6dB (configurable with jumpers)
Fine gain control:	-5 to +5dB (card edge pot adjustable)
Maximum input level:	
0dB input gain:	+34dBu
+6dB input gain:	+28dBu
Common mode rejection:	> 105dB @ 60Hz
Common mode range:	
0dB input gain:	> ±22V
+6dB input gain:	> ±7V
Input impedance:	
0dB input gain:	44kΩ
+6dB input gain:	26kΩ

Analog Audio Outputs:

Number of Outputs:	9
Connectors:	3-pin removable terminal strips
Output step gain:	0, 3.5 or 9.5dB (configurable with jumpers)
Max. output level:	+28dBu across hi-impedance load +24dBu into 600Ω load
Output impedance:	66Ω
Freq. Response:	±0.03dB 20Hz to 20kHz
THD+N:	0.001% 20Hz to 20kHz @ 28dBu, unweighted RMS
Output Isolation:	> 100dB @ 1kHz, 100 dB @ 20kHz

Electrical:

Voltage:	+12V DC
Power:	TBD

Physical:

Number of slots:	1

Ordering Information

400ADA-AUD - Analog Audio Distribution Amplifier (1x9)

Enclosures
400FR Compact High Density Balanced Audio Distribution Frame

400DA-AESB

Balanced AES Audio Distribution Amplifier

The 400DA-AESB is a nine output reclocking and auto equalizing DA for balanced 110Ω AES signals. The DA automatically equalizes up to 300m of Belden 1800B cable and provides reclocked outputs with sampling frequencies of 32kHz, 44.1kHz, 48kHz and 96kHz. The 400DA-AESB card edge LED indicators provide quick and accurate assessment of the incoming signal integrity.

The 400ADA-AESB is housed in the 3RU 400FR frame that will hold up to 16 modules.

Features & Benefits

- Data reclocking provides jitter reduction
- VistaLINK® capable for remote monitoring via SNMP (using VistaLINK® PRO) when installed in 400FR frame with 500FC VistaLINK® Frame Controller

Inputs
- AES3-1992 standard for AES audio on 110Ω twisted pair cable
- EQ and reclock provide extended cable length compensation (> 300m)
- Transformer coupled 110Ω balanced input

Outputs
- Nine 110Ω balanced

Card Edge LEDs
- Module Health Status
- Error LED indication for input PLL out of lock, parity error or biphase coding error
- Reclocked locked

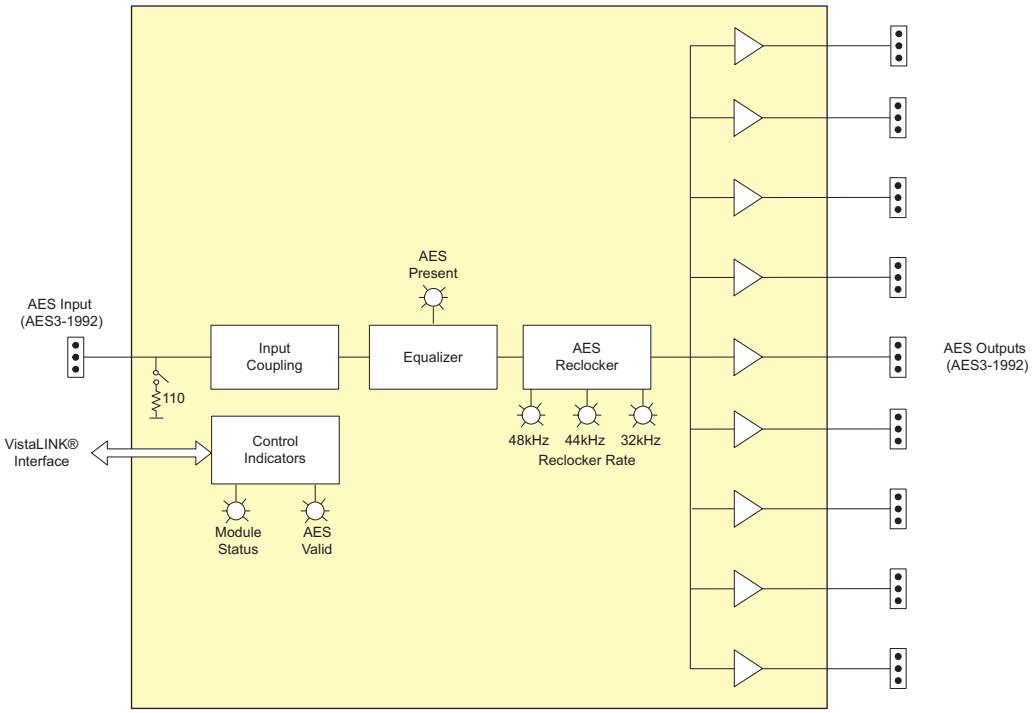

Specifications

AES Input:

Standard:	AES3-1992
Number of Inputs:	1
Connector:	3-pin removable terminal strip
Input Level:	2 to 7V p-p
Coupling:	Transformer
Input Impedance:	110Ω
Return Loss:	> 14dB 100kHz to 6MHz
Equalization:	Automatic to 300m with Belden 1800B (or equivalent) @ 48kHz AES signal
Sampling Frequency:	32kHz, 44.1kHz, 48kHz and 96kHz

AES Output:

Number of Outputs:	9 Balanced AES reclocked
Connector:	3-pin removable terminal strip
Output Level:	5V p-p
Output Impedance:	110Ω
Return Loss:	> 30dB 100kHz to 6MHz

Physical:

Number of Slots:	1

Electrical:

Voltage:	+12V DC
Power:	5W
EMI/RFI:	Complies with FCC Part 15 Class A EU EMC Directive

Ordering Information

400DA-AESB	Balanced AES Audio Distribution Amplifier (1x9)

Accessories

+4PS	Redundant power supply option for 400FR

400DA2Q-AESB

Dual Balanced AES Audio Distribution Amplifier

The 400DA2Q-AESB provides an economical method of distribution for your 110Ω balanced AES digital audio signals. The DAs feature two auto-equalized inputs with four reclocked outputs each. The module can also be configured for one input with eight reclocked outputs for applications where a larger number of outputs are required.

The 400DA2Q-AESB is housed in the 400FR exponent frame that will hold up to 16 modules. The 400DA2Q-AESB card edge LED indicators provide quick and accurate assessment of the incoming signal integrity

Features & Benefits

- Data reclocking provides jitter reduction
- 2 Independent distribution amplifiers with 4 reclocked outputs
- Can also be configured as 1x8 output distribution amplifier
- VistaLINK® capable for remote monitoring via SNMP (using VistaLINK® PRO) when installed in 400FR frame with 500FC VistaLINK® Frame Controller

Inputs
- AES3-1992 standard for AES audio on 110Ω twisted pair cable
- EQ and reclock provide extended cable length compensation (> 300m)
- Transformer coupled 110Ω balanced input

Outputs
- Eight 110Ω balanced

Card Edge LEDs
- Module Health Status
- Error LED indication for input PLL out of lock, parity error or biphase coding error
- Reclocked locked

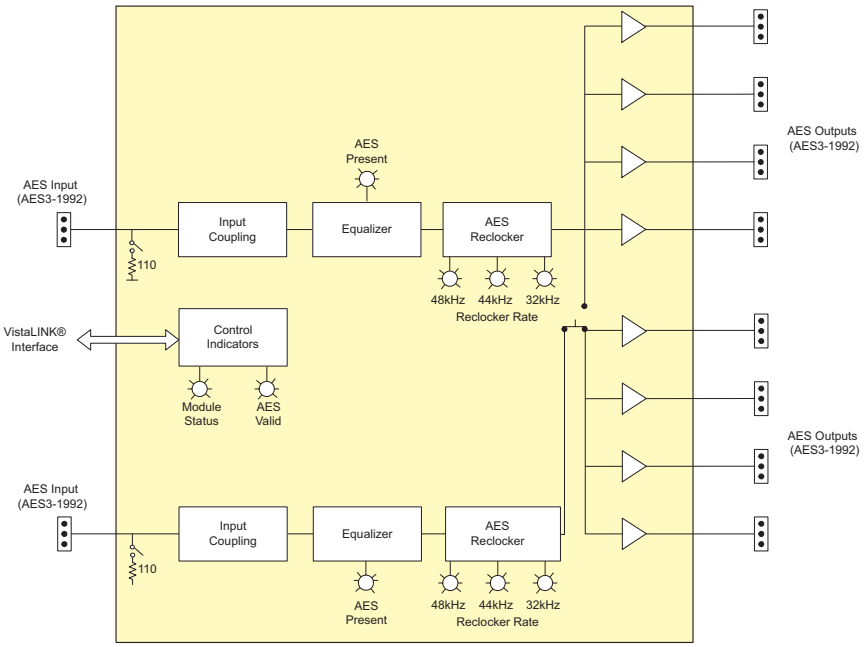

Specifications

AES Input:

Standard:	AES3-1992
Number of Inputs:	1
Connector:	3-pin removable terminal strip
Input Level:	2 to 7V p-p
Coupling:	Transformer
Input Impedance:	110Ω
Return Loss:	> 14dB 100kHz to 6MHz
Equalization:	Automatic to 300m with Belden 1800B (or equivalent) @ 48kHz AES signal
Sampling Frequency:	32kHz, 44.1kHz, 48kHz

AES Output:

Number of Outputs:	4 balanced AES reclocked outputs per input (2 - 1x4 mode) 8 balanced reclocked outputs (1x8 mode)
Connector:	3-pin removable terminal strip
Output Level:	5V p-p
Output Impedance:	110Ω
Return Loss:	> 30dB 100kHz to 6MHz

Physical:

Number of Slots:	1

Electrical:

Voltage:	+12V DC
Power:	5W
EMI/RFI:	Complies with FCC Part 15 Class A EU EMC Directive

Ordering Information

400DA2Q-AESB	Dual Balanced AES Audio Distribution Amplifier

Accessories

+4PS	Redundant power supply option for 400FR

500FR & S501FR

Compact High Density Distribution Frame

Note: The above image shows 3 of the S501FR standalone Compact High Density Distribution Frames mounted into the S501FR-RP Rackmount panel S501FR

Specifications

Electrical (500FR):
AC Mains Input: Auto ranging, 100 to 240V AC, 50/60Hz
Max. Operating Current: 2.6 A (@ 120V AC), 1.4 A (@ 240V AC)
Max. Power Consumption: 200W
Max. Module Load: 160W (10W per slot)
Power Supply Configuration: Dual, redundant, separate AC inlets
Connector: IEC 60320 - 1 per power supply
Fuses: 4 amp, 250 volt time delay 5x20 mm. - 2 per power supply
Safety: CSA Listed to CSA C22.2 No. 60065-03, UL 60065-03
IEC 60065-(2001-12) 7th Edition
Complies with CE Low voltage Directive 93/68/EEC
EMC: Complies with FCC part 15, class A
Complies with EU EMC directive 89/336/EEC

Electrical (S501FR):
Voltage: 12V DC Nominal
Auto ranging, 100 to 240V AC power adapter
Power Consumption: 10W max
Fuse: Internal self resetting fuse
Connector: 2.5mm DC power jack

Physical (500FR):
Height: 5.25" (133mm)
Width: 19" (483mm)
Depth: 9.5" (368mm)
Module Capacity: 16 slots
Weight: Approx 17lbs (7.7kg) with 2 power supplies, no slots occupied
Approx. 32lbs (14.5kg) with 2 power supplies all slots occupied

Physical (S501FR):
Dimensions: 4.9"W x 1.2"H x 10.5"D (124mm W x 30mm H x 267mm D)
Module Capacity: 1 single slot
Weight: 1lb (.45kg)

Certification:
Safety: CSA Listed (500FR)
Power adapter CSA listed (S501FR)
Complies with CE Safety Directive
EMC: Complies with FCC part 15, Class A
EU EMC Directive

Signal Connections: BNC per IEC 60169-8 Amendment 2 (10 per slot)

Status Indicators: PSU status LED, Local Error/Failure LED

Tally Output Connector: 4-pin terminal, relay N/O, N/C for status/fault alarm
2A, 125VDC max

Temperature: 0-40°C optimal performance
0-50°C operating

Ordering Information

500FR	Compact High Density Distribution Frame
Accessories	***exponent***
+5PS	Redundant power supply option for 500FR

S501FR	Standalone Compact High Density Distribution Frame
Accessories	***exponent***
S501FR-RP	Rackmount panel mounts 3 S501FR enclosures in 1RU rack space Includes two blank panels for unfilled slots)

An Industry Comparison

Based on 6RU of Rack Space

Most Dense Available

Evertz ***exponent*** DA Frame

Total Number of Output BNCs per 6RU = **288**

Competitor's DA Frame

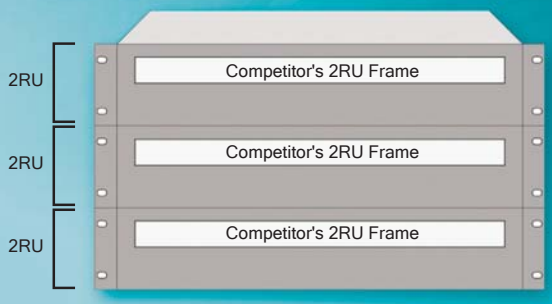

Total Number of Output BNCs per 6RU = 240-270

Notes:
- ***exponent*** achieves the highest density with 288 BNC outputs (per 6RU)
- ***exponent*** uses less power supplies thus less points of failure (per 6RU)
- ***exponent*** provides a direct connection to an SNMP network. Some competitive pseudo SNMP solutions require intermediate application servers or protocol translators which add latency, single point of failure issues, cost, and complexity.

500FR-L-A & 500FR-L-D

Compact High Density Analog & Digital Looping Distribution Frame

The 500FR-L-A & 500FR-L-D expand on Evertz current exponent family of Compact High Density Distribution Frames. The 500FR-L-A maintains the ability to provide high-density distribution of analog signals while the 500FR-L-D maintains the ability to provide high-density distribution of digital signals. They also provide the ability to loop a single analog or digital input source through multiple slots on the same frame.

The 500FR-L-A allows for the looping of up to 16 (Analog) loop thru modules. The 500FR-L-D allows for the looping of up to 16 (SD SDI) 500DA-L modules or up to 12 (HD) 500DA-HD-L modules. Both frames also allow for the hot swapping of modules from the front without any impact on the input signal to the remaining modules in the frame.

500FR-L-A & 500FR-L-D Typical Applications

The typical application for the Loop Thru frames are in a broadcast plant or mobile production units, where distribution of reference and test signals from a single timed source is critical.

The complete Evertz Master Clock SPG solution allows for minimal impact of potential module failures and provides maximum reliability.

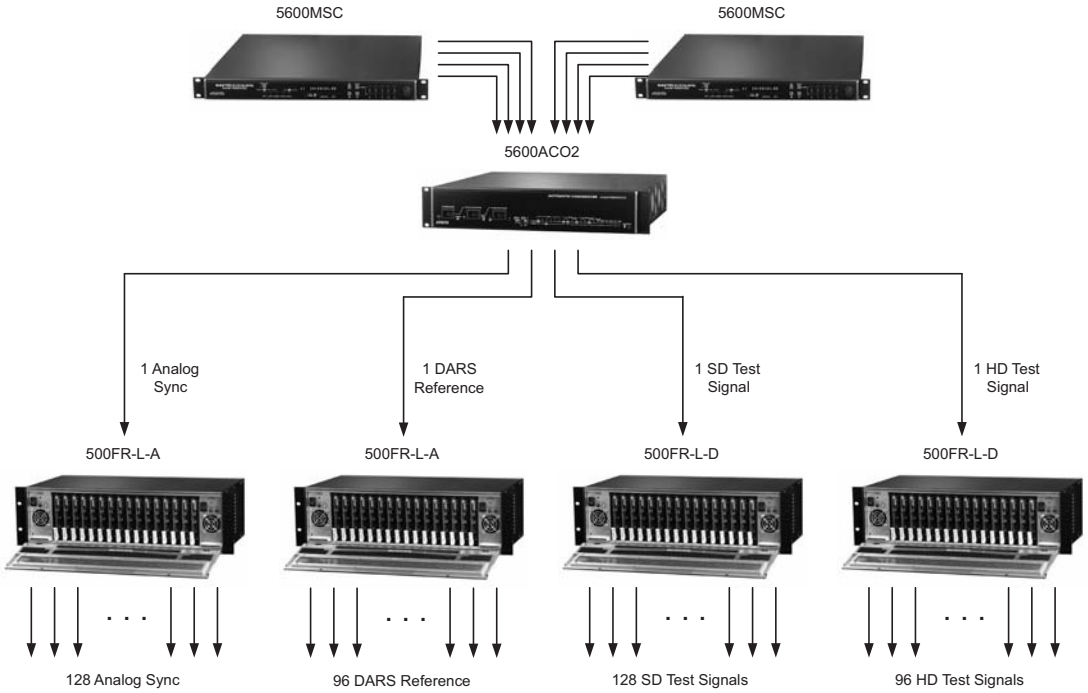

Specifications

Electrical:

AC Mains Input:	Auto ranging, 100 to 240V AC, 50/60Hz
Maximum Operating Current:	2.6 A (@ 120V AC), 1.4 A (@ 240V AC)
Max. Power Consumption:	200W
Max. Module Load:	160W (10W per slot)

Power Supply Configuration:

	Dual, redundant, separate AC inlets
Connector:	IEC 60320 - 1 per power supply
Fuses:	4 amp, 250 volt time delay 5x20 mm. - 2 per power supply
Safety:	CSA Listed to CSA C22.2 No. 60065-03, UL 60065-03 IEC 60065-(2001-12) 7th Edition Complies with CE Low voltage Directive 93/68/EEC
EMC:	Complies with FCC part 15, class A. Complies with EU EMC directive 89/336/EEC

Physical:

Height:	5.25" (133mm)
Width:	19" (483mm)
Depth:	9.5" (368mm)
Module Capacity:	16 slots
Weight:	Approx. 17lbs (7.7kg) with 2 power supplies, no slots occupied Approx. 32lbs (14.5kg) with 2 power supplies all slots occupied

Certification:

Safety:	CSA Listed Complies with CE Safety Directive
EMC:	Complies with FCC part 15, Class A EU EMC Directive
Signal Connections:	BNC per IEC 60169-8 Amendment 2 (10 BNC per slot)
Status Indicators:	PSU status LED Local Error/Failure LED

Tally Output Connector:

4-pin terminal, relay N/O, N/C for status/fault alarm 2A, 125 VDC max

Temperature:	0-40° C optimal performance 0-50° C operating

Ordering Information

500FR-L-A	Compact High Density Distribution Frame with Loop Thru (Analog)
500FR-L-D	Compact High Density Distribution Frame with Loop Thru (Digital)

Accessories	***exponent***
+5PS	Redundant power supply option for 500FR

500FC

VistaLINK® Frame Controller

The 500FC VistaLINK® Frame Controller card provides a single point of access to communicate with VistaLINK® - capable 500 series modules. The 500FC VistaLINK® Frame Controller provides a 10Base-T/100Base-TX Ethernet port and communication is facilitated through the use of Simple Network Management Protocol (SNMP).

The 500FC VistaLINK® Frame Controller handles all SNMP communications between the frame and the network manager (NMS), and serves as a gateway to individual cards in the frame. The 500FC is a true SNMP agent and can be connected directly to your Ethernet/SNMP Network. No external intermediate translator application servers or PC based protocol translators are required.

Features & Benefits

- Complies with IEEE 802.3 100Base-TX and 10Base-T Ethernet standards
- 100Mbps Fast Ethernet or 10Mb/s Ethernet data transfer, selected by auto-negotiation
- Full duplex or half-duplex operation, selected by auto negotiation
- RJ-45 connector for network cable connection
- Front panel LEDs indicate module status
- Rear panel LEDs indicate Ethernet link, activity and speed
- Provides frame/chassis status information through enabled hardware via SNMP (using VistaLINK® PRO) including power supply status, frame status, card insertion/removal counters, 500FC software version number, LED control
- Comprehensive signal and status monitoring through SNMP and VistaLINK®
- Can be used with 500FR, 500FR-L-A, 500FR-L-D frames

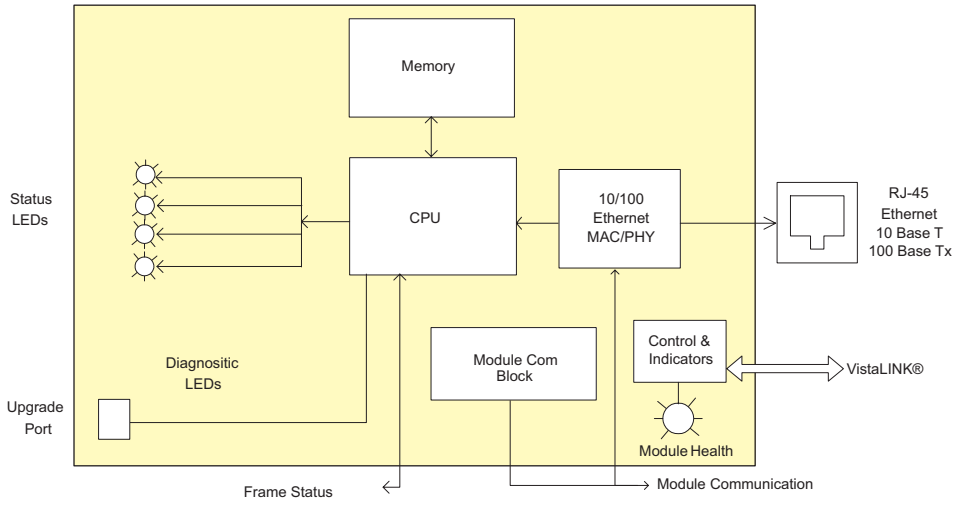

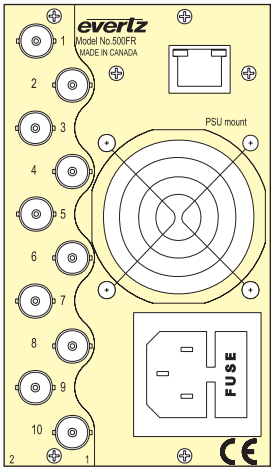

Specifications

Ethernet:

Network Type:	Fast Ethernet 100 Base-TX IEEE 802.3u standard for 100 Mbps baseband CSMA/CD local area network Ethernet 10 Base-T IEEE 802.3 standard for 10 Mbps baseband CSMA/CD local area network
Connector:	RJ-45

Electrical:

Voltage:	+ 12V DC
Power:	7W
EMI/RFI:	Complies with FCC Part 15 Class A EU EMC directive

Physical:

Number of slots:	1

Ordering Information

500FC	VistaLINK® Frame Controller

Enclosure	***exponent***
500FR	Compact High Density Distribution Frame
500FR-L-A	Compact High Density Distribution Frame with Loop Thru (Analog)
500FR-L-D	Compact High Density Distribution Frame with Loop Thru (Digital)

The 500FC-DA-HD Frame Controller with Distribution Amplifier card provides a single point of access to communicate with VistaLINK® - capable 500 series of cards. The 500FC-DA-HD provides a 10Base-T/100Base-TX Ethernet port and communication is facilitated through the use of Simple Network Management Protocol (SNMP). The 500FC-DA-HD handles all SNMP communications between the frame (500FR) and the network manager (NMS), and serves as a gateway to individual cards in the frame. The 500FC-DA-HD also provides an RS-232 serial port at the card edge to set up the network addresses.

In addition the 500FC-DA-HD provides an on board reclocking distribution amplifier for HD/SD video signal at rates of 1.5Gb/s and 143Mb/s to 540Mb/s. The DA features an auto-equalized input with eight reclocked outputs and has been designed for use as a SMPTE 292M (1.5Gb/s), DVB-ASI or SMPTE 259M distribution product.

Features & Benefits

- Complies with IEEE 802.3 100Base-TX and 10Base-T Ethernet standards
- 100Mb/s Fast Ethernet or 10Mb/s Ethernet data transfer, selected by auto-negotiation
- Full duplex or half-duplex operation, selected by auto negotiation
- RJ-45 connector for network cable connection
- Card edge RS-232 serial control port for configuration
- Front panel LEDs indicate module fault
- Rear panel LEDs indicate Ethernet link, activity and speed
- Provides frame/chassis status information through enabled hardware via VistaLINK® including frame status, card insertion/removal counters, and 500FC-DA-HD software version number

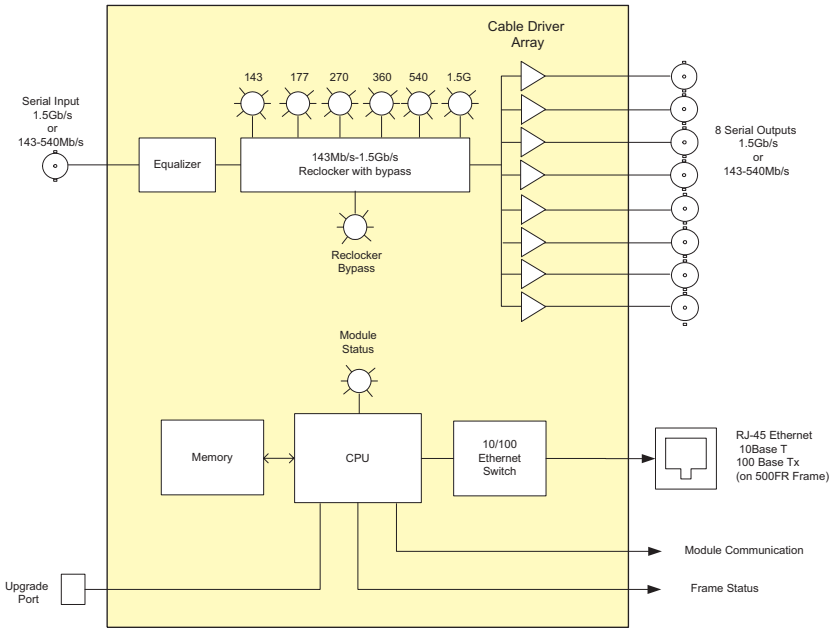

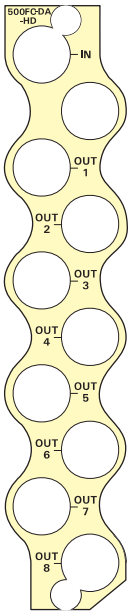

Specifications

Serial Video Inputs:

Standards:	SMPTE 292M, SMPTE 259M-A, B, C, D (143 to 540Mb/s) or DVB-ASI
Connector:	1 BNC per IEC 60169-8 Amendment 2
Equalization:	Automatic to140m @ 1.5Gb/s
Return Loss:	> 15dB up to 1.0Gb/s, > 10dB up to 1.5Gb/s

Serial Video Outputs:

Number of Outputs:	8 (Optionally reclocked)
Connector:	BNC per 60169-8 Amendment 2
Signal Level:	800mV nominal
DC Offset:	0V ±0.5V
Rise and Fall Time:	200ps nominal
Overshoot:	< 10% of amplitude
Return Loss:	> 15dB up to 1.0Gb/s > 12dB up to 1.5Gb/s
Wide Band Jitter:	< 0.2 UI

Ethernet:

Network Type:	Fast Ethernet 100 Base-TX IEEE 802.3u standard for 100 Mbps baseband CSMA/CD local area network Ethernet 10 Base-T IEEE 802.3 standard for 10 Mbps baseband CSMA/CD local area network
Connector:	RJ-45

Serial Communications:

Standard:	RS-232
Connector:	9-Pin Female D connector on upgrade breakout cable (provided with 500FR)
Baud Rate:	57,600
Format:	8 bits, no parity, 2 stop bits, no flow control

Electrical:

Voltage:	+12V DC
Power:	5.5W
EMI/RFI:	Complies with FCC Part 15 Class A and EU EMC directive

Physical:

Number of slots:	1 (must be in slot 1 of 500FR)

Ordering Information

500FC-DA-HD	Frame Controller with HD/SD-SDI Reclocking DA (1x8)

Accessories ***exponent***

+5PS Redundant power supply option for 500FR

500DA-L

SD-SDI Reclocking Distribution Amplifier with Loop Thru

The 500DA-L is a SD-SDI Reclocking Distribution Amplifier for use in the Evertz high density digital looping frame (the 500FR-L-D). The 500DA-L supports all data rates included in SMPTE 259M (143-360Mb/s) and SMPTE 344M (540Mb/s) as well as DVB-ASI. The 500DA-L features auto-equalized inputs with eight serial outputs. When inserted into the 500FR-L-D, a passive loop output is available to enable cascading of multiple DA cards. The passive loop is implemented on the 500FR-L-D back-plane. As result, a failure of any single card or the removal any single card does not affect any other cards being used for signal distribution. Up to 16 500DA-HD-L cards may be cascaded error free in the 500FR-L-D frame. The 500DA-L also features a re-clocker by-pass to support operation with non-standard data rates like SMPTE 310M and others.

Features & Benefits

- Automatic equalization, rate detection and re-clocking for all SMPTE 259M (143-360Mb/s) and SMPTE 344M (540Mb/s) data rates
- Jumper selectable DVB-ASI mode of operation
- Jumper selectable non re-clocked mode for SMPTE 310M and other non-standard date rates
- Passive loop output when inserted into the 500FR-L-D
- Error free cascading of up to 16 modules within the 500FR-L-D
- Fully hot-swappable from front of frame with no BNC disconnect
- Independent isolated output drivers to ensure no cross channel loading effects (ie. no need to terminate unused outputs)
- Outputs maintain polarity from input to output for DVB-ASI applications
- Tally output on Frame Status bus upon loss of input signal
- VistaLINK® - capable for remote monitoring via SNMP (using VistaLINK® PRO) when installed in 500FR-L-D with 500FC VistaLINK® Frame Controller

Input
- SMPTE 259M (143-360Mb/s), SMPTE 344M (540Mb/s), DVB-ASI and SMPTE 310M (non-reclocked)
- Return Loss > 15dB to 540Mb/s
- Auto equalizing to 400m @ 270Mb/s (Belden 1694)

Outputs
- 8 re-clocked outputs
- 1 passive loop out for cascading multiple cards in 500FR-L-D

Card Edge LEDs
- Reclocker rate
- DVB-ASI Enabled
- Reclocker enabled
- Max Equalization Warning
- Module Health Status

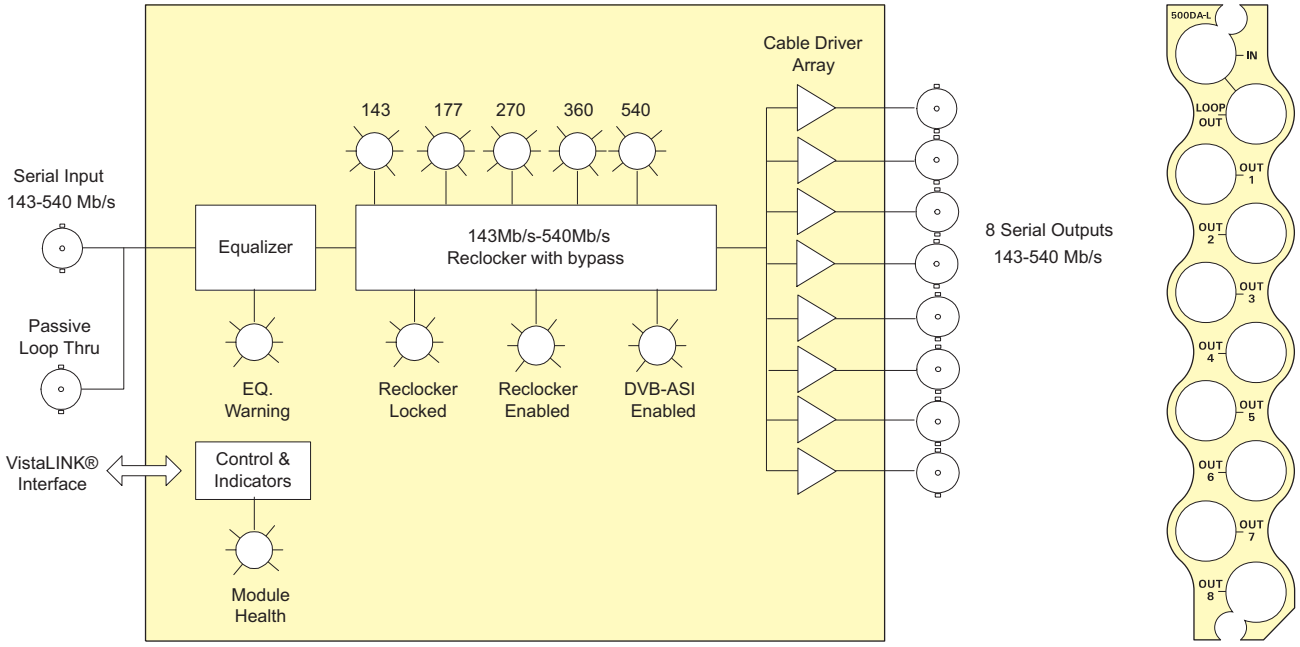

Specifications

Serial Video Input: SMPTE 259M (143Mb/s-360Mb/s)
SMPTE 344M (540Mb/s)
SMPTE 310M (19.4Mb/s) - non reclocked
DVB-ASI
Connector: BNC per IEC 60169-8 Amendment 2
Equalization: 1 400m @ 270Mb/s
Return Loss: > 15dB up to 540Mb/s

Serial Video Output:
Reclocked Outputs: 8
Passive Loop Outputs: 1
Connector: BNC per IEC 60169-8 Amendment 2
DC Offset: 0V ±0.5V
Rise and Fall Time: 200ps nominal
Return Loss: > 15dB up to 540Mb/s
Wideband Jitter: < 0.2 U

Ordering Information

500DA-L	SD-SDI Reclocking Distribution Amplifier with Loop Thru

Enclosures
exponent
500FR-L-D Compact High Density Distribution Frame with Loop Thru (Digital)

500DA-HD-L

HD/SD-SDI Reclocking Distribution Amplifier with Loop Thru

The 500DA-HD-L is a HD/SD-SDI Reclocking Distribution Amplifier for use in the Evertz high-density digital looping frame (the 500FR-L-D). The 500DA-HD-L supports all data rates included in SMPTE 292M (1.5Gb/s), SMPTE 259M (143-360Mb/s) and SMPTE 344M (540Mb/s) as well as DVB-ASI.

The 500DA-HD-L features auto-equalized inputs with eight serial outputs. When inserted into the 500FR-L-D, a passive loop output is available to enable cascading of multiple DA cards.

The passive loop is implemented on the 500FR-L-D back-plane. As result, a failure of any single card or the removal any single card does not affect any other cards being used for signal distribution. Up to 12 500DA-HD-L cards may be cascaded error free in the 500FR-L-D frame. The 500DA-HD-L also features a re-clocker by-pass to support operation with non-standard data rates like SMPTE 310M and others.

Features & Benefits

- Automatic equalization, rate detection and re-clocking for all SMPTE 292M (1.5Gb/s), SMPTE 259M (143-360Mb/s) and SMPTE 344M (540Mb/s) data rates
- Jumper selectable DVB-ASI mode of operation
- Jumper selectable non re-clocked mode for SMPTE 310M and other non-standard date rates
- Passive loop output when inserted into the 500FR-L-D
- Error free cascading of up to 12 modules within the 500FR-L-D
- Fully hot-swappable from front of frame with no BNC disconnect
- Independent isolated output drivers to ensure no cross channel loading effects (ie. no need to terminate unused outputs)
- Outputs maintain polarity from input to output for DVB-ASI applications
- Tally output on Frame Status bus upon loss of input signal
- VistaLINK® - capable for remote monitoring via SNMP (using VistaLINK® PRO) when installed in 500FR-L-D with 500FC VistaLINK® Frame Controller

Input
- SMPTE 292M (1.5Gb/s), SMPTE 259M (143-360Mb/s), SMPTE 344M (540Mb/s), DVB-ASI and SMPTE 310M (non-reclocked)
- Return Loss > 15dB to 1.5Gb/s
- Auto equalizing to 140m @ 1.5Gb/s and 400m @ 270Mb/s (Belden 1694)

Outputs
- 8 re-clocked outputs
- 1 passive loop out for cascading multiple cards in 500FR-L-D

Card Edge LEDs
- Reclocker rate
- DVB-ASI Enabled
- Reclocker enabled
- Max Equalization Warning
- Module Health Status

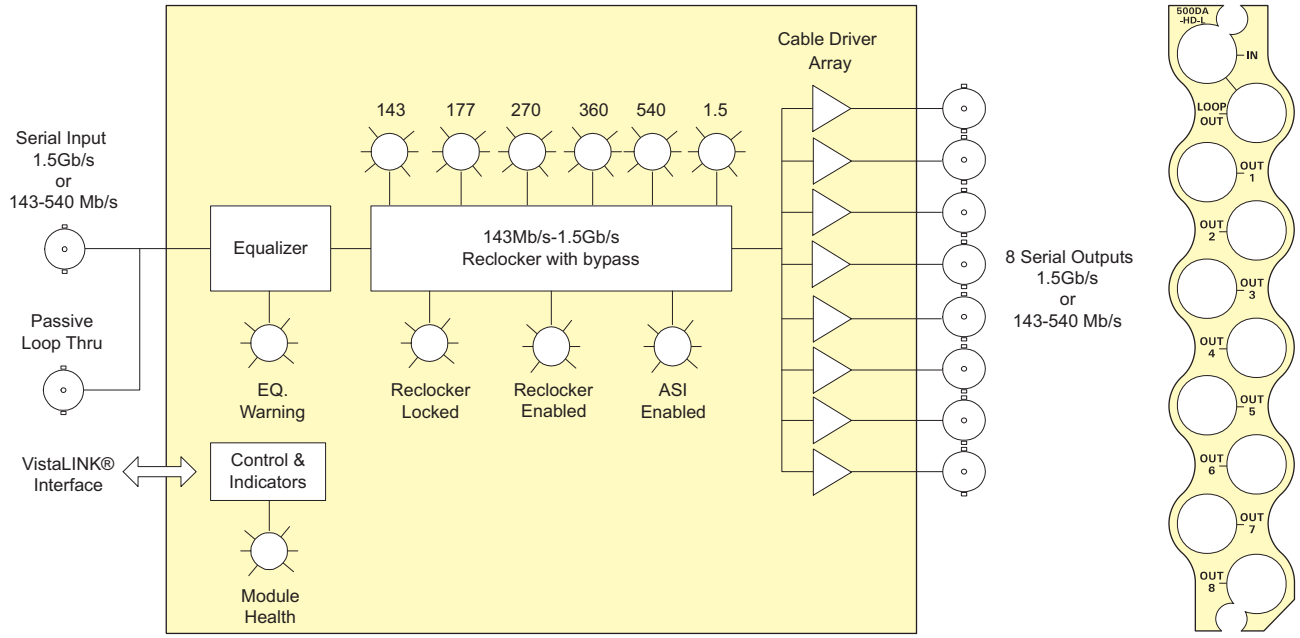

Specifications

Serial Video Input: SMPTE 292M (1.5Gb/s)
SMPTE 259M (143Mb/s-360Mb/s)
SMPTE 344M (540Mb/s)
SMPTE 310M (19.4Mb/s) - non reclocked
DVB-ASI
Connector: BNC per IEC 60169-8 Amendment 2
Equalization: 140m @ 1.5Gb/s & 400m @ 270Mb/s
Return Loss: > 15dB up to 1.5Gb/s

Serial Video Output:
Reclocked Outputs: 8
Passive Loop Outputs: 1
Connector: BNC per IEC 60169-8 Amendment 2
DC Offset: 0V ±0.5V
Rise and Fall Time: 200ps nominal
Return Loss: > 15dB

Ordering Information

500DA-HD-L	HD/SD-SDI Reclocking Distribution Amplifier with Loop Thru

Enclosures
500FR-L-D — ***exponent*** Compact High Density Distribution Frame with Loop Thru (Digital)

500ADA-EQ-L

Analog Video Distribution Amplifier with Cable Equalization

The 500ADA-EQ-L is an Analog Distribution Amplifier with cable equalization on 8 outputs. It amplifies composite analog for distributing 75Ω analog video signals.

The 500ADA-EQ-L has a user-selectable Low Pass Filter with an 8MHz corner frequency to eliminate unwanted out of band high frequencies. This is ideal for the distribution of master black throughout the broadcast plant.

The module features one balanced equalized input with 8 unbalanced outputs. The 500ADA-EQ-L can also monitor signal and hardware integrity.

When inserted into a 500FR-L-A (Compact High Density Distribution Frame with Analog Loop Thru), the 500ADA-EQ-L allows for passive loop through of an analog video input to the other modules in the frame. The 500ADA-EQ-L is housed in the 3RU ***exponent*** 500FR frame or 500FR-L-A that will hold up to 16 modules.

Features & Benefits

- Passive loop thru
- 75Ω or high impedance input
- High common mode range and common mode rejection ratio (CMRR)
- Jumper selectable low pass input filtering
- Gain control
- Jumper selectable AC or DC coupling
- Jumper selectable fast or slow back porch clamp
- DC level control when clamp is enabled
- Cable post equalizer adjustment on input. Range: 0 to 300m of 8281 or 1694
- Consistent input impedance if card power is lost
- Signal and hardware integrity monitoring
- VistaLINK® - capable for remote monitoring via SNMP (using VistaLINK® PRO) when installed in 500FR frame with 500FC VistaLINK® Frame Controller

Card Edge LEDs
- Module status/Local Fault
- Signal Status

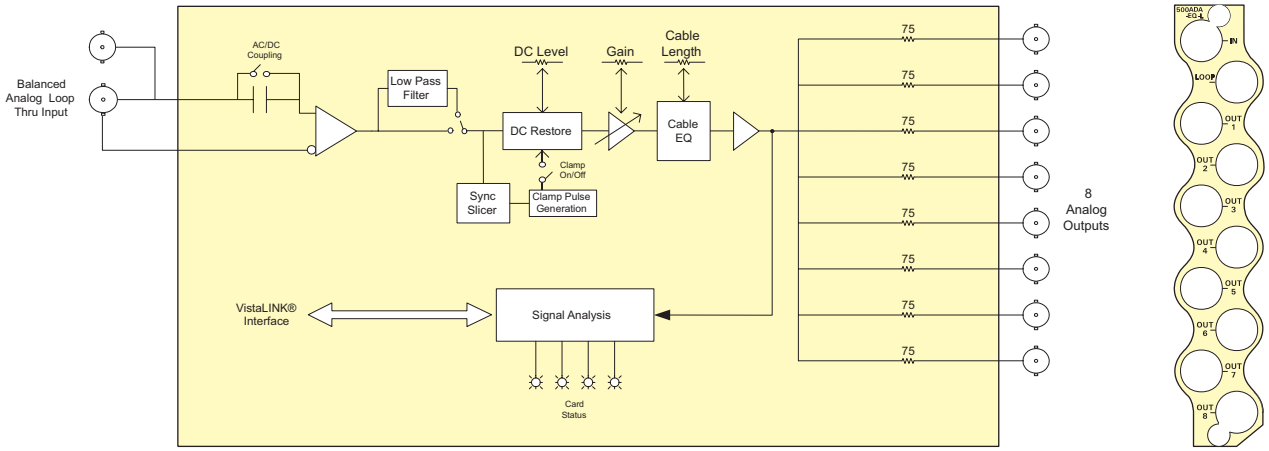

Specifications

Analog Video Input:

Standards:	NTSC or PAL-B
Connector:	1 BNC per IEC 60169-8 Amendment 2
Common mode range:	> 6V p-p
CMRR:	> 70dB to 1kHz
Signal amplitude:	2.5V p-p max
Cable post, pre- equalizer:	0 to 300m of Belden 8281 or 1694A cable
Impedance:	Hi-Z (Looping)
Coupling:	AC or DC (jumper selectable)
Single Card Return Loss:	> 25dB to 5.5MHz (De-rate spec. when looping through multiple 500FR-L-A inputs)
Fast clamp attenuation of 60Hz:	> 20dB

Analog Video Outputs:

Number of Outputs:	8 Per Card
Connector:	BNC per IEC 60169-8 Amendment 2
Output Impedance:	75Ω
Gain control range:	+5dB
DC Level:	< ±100mV (with DC Coupling active and back porch clamp disabled)
DC Level Control Range:	< ±200mV (with back porch clamp enabled)
Output isolation:	> 42dB to 10MHz, > 32dB to 30MHz
Output return loss:	> 40dB to 30MHz
Noise Performance	< -70dB RMS 15kHz to 5.5MHz < -78dB RMS NTC7 weighting

Physical:

Number of Slots:	1

Electrical:

Voltage:	+ 12V DC
Power:	1.2W
EMI/RFI:	Complies with FCC Part 15 Class A EU EMC Directive

Ordering Information

500ADA-EQ-L	Analog Video Distribution Amplifier with Cable Equalization

Enclosures	***exponent***
500FR-L-A	Compact High Density Distribution Frame with Loop Thru (Analog)

The 500DA-HD Reclocking Distribution Amplifier provides reliable distribution of your HD and SD SDI video signal at rates of 1.5 Gb/s and 143 Mb/s to 540 Mb/s. The DA features an auto-equalized input with eight serial outputs.

The 500DA-HD has been designed for use as a SMPTE 292M (1.5 Gb/s), DVB-ASI, SMPTE 259M, or SMPTE 310M distribution product.

The 500DA-HD DA's are housed in the 3RU 500FR frame that will hold up to 16 modules.

Features & Benefits

- Normal mode for SMPTE 259M (143 Þ 540 Mb/s) or SMPTE 292M (1.5 Gb/s) signals - autodetects correct bitrate
- Jumper Selectable mode for DVB-ASI
- Jumper selectable non-reclock mode for SMPTE 310M (19.4Mb/s) signals or any other SDI signal within the 143Mb/s to 1.5Gb/s range
- Fully hot-swappable from front of frame with no BNC disconnect required
- Independent isolated output drivers to ensure no cross channel loading effects (i.e. no need to terminate unused outputs)
- Tally output on Frame Status bus upon loss of input signal for quality monitoring
- VistaLINK® capable for remote monitoring via SNMP (using VistaLINK® PRO) when installed in 500FR frame with 500FC VistaLINK® Frame controller

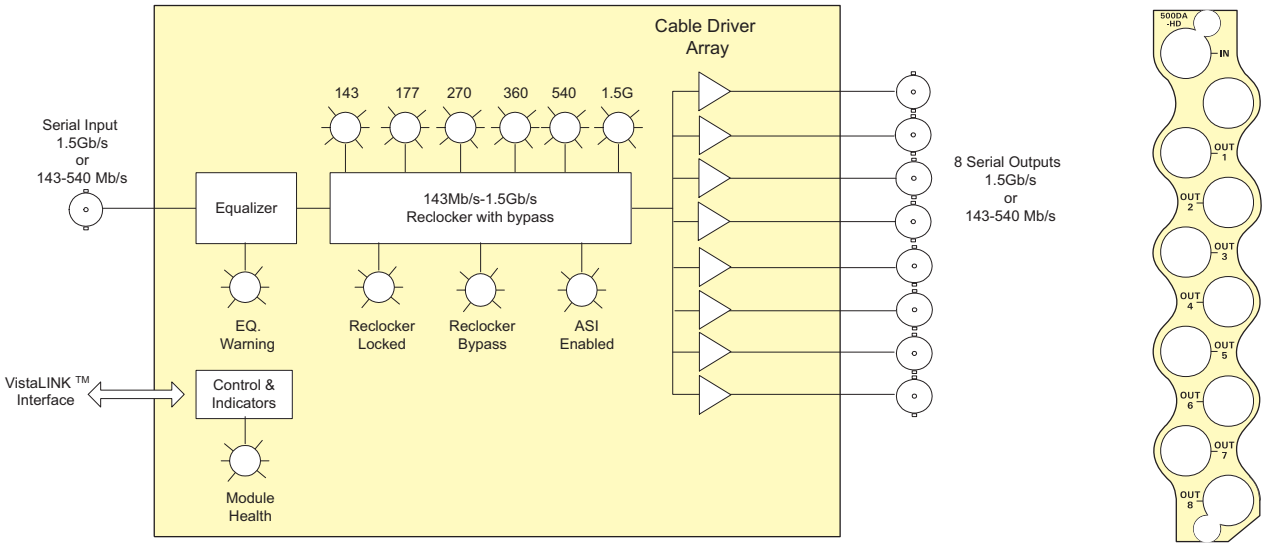

Specifications

Serial Video Inputs:

Standards:	SMPTE 292M (1.5Gb/s), SMPTE 259M (143 to 360Mb/s), SMPTE 344M (540Mb/s), DVB-ASI
Connector:	1 BNC per IEC 60169-8 Amendment 2
Equalization:	Automatic to 350m @ 270Mb/s, 110m @ 1.5Gb/s with Belden 1694A (or equivalent)
Return Loss:	> 15dB up to 1.0Gb/s, > 10dB up to 1.5Gb/s

Serial Video Outputs:

Number of Outputs:	8 (Optionally reclocked)
Connector:	BNC per 60169-8 Amendment 2
Signal Level:	800mV nominal
DC Offset:	0V ±0.5V
Rise and Fall Time:	200ps nominal
Overshoot:	< 10% of amplitude
Return Loss:	> 10dB up to 1.5Gb/s
Wide Band Jitter:	< 0.2 UI

Electrical:

Voltage:	+12V DC
Power:	5W
EMI/RFI:	Complies with FCC Part 15 Class A and EU EMC directive

Physical:

Number of slots:	1

Ordering Information

500DA-HD	HD/SD SDI Reclocking Distribution Amplifier (1x8)

Enclosures	***exponent***
500FR	Compact High Density Distribution Frame
S501FR	Standalone enclosure

500DA2Q-HD

HD/SD SDI Dual Reclocking Distribution Amplifier (32 1x4 DA's in 3RU Rack Space)

The 500DA2Q-HD Dual HD Reclocking Distribution Amplifier provides the highest density DA in the industry allowing up to 32 HD or SDI Distribution amplifiers in a 3RU rack space. It provides inexpensive distribution of your SMPTE 292M (1.5Gb/s), SMPTE 259M (143 to 360Mb/s), SMPTE 344M (540Mb/s), DVB-ASI or SMPTE 310M (19.4Mb/s) or any other SDI signal within the 143Mb/s to 1.5Gb/s range.

The 500DA2Q-HD features two auto-equalized inputs and can be configured either as a single DA with eight reclocked outputs or as two separate DAs with four outputs each. In the case of dual operation, each DA can be individually set via jumpers for either reclocking or non-reclocking.

The 500DA2Q-HD is housed in the 500FR ***exponent*** frame that will hold up to 16 modules.

Features & Benefits

- Normal mode for SMPTE 292M (1.5Gb/s) SMPTE 259M (143-360Mb/s) or SMPTE 344M (540Mb/s) signals - autodetects correct bit rate
- Jumper selectable mode for DVB-ASI
- Jumper selectable non-reclock mode for SMPTE 310M (19.4Mb/s) signals or any other SDI signal within the 143Mb/s to 1.5Gb/s range
- Configurable as 1 DA with 8 outputs or 2 DAs with 4 outputs each
- Fully hot-swappable from front of frame with no BNC disconnect required
- Independent isolated output drivers to ensure no cross channel loading effects (i.e. no need to terminate unused outputs)
- Module health and 2x4 Mode Status LEDs
- Reclocker(s) Locked, Carrier Present and Video Standard LEDs for each DA channel
- Tally output on Frame Status bus upon loss of input signal
- VistaLINK® capable for remote monitoring via SNMP (using VistaLINK® PRO) when installed in 500FR frame with 500FC VistaLINK® Frame Controller

Inputs
- 2 inputs
- SMPTE 292M (1.5Gb/s), SMPTE 259M (143 to 360Mb/s), SMPTE 344M (540Mb/s), DVB-ASI or SMPTE 310M (19.4Mb/s)
- Auto equalization to 100m Input A, 90m Input B (Belden 1694A) @ 1.5Gb/s

Outputs
- 4 reclocked outputs per input
- Jitter < 0.2 UI

Card Edge LEDs
- Module Health Status
- 2x4 mode operation
- Reclocker rate detection
- Reclocker Locked
- Carrier Present

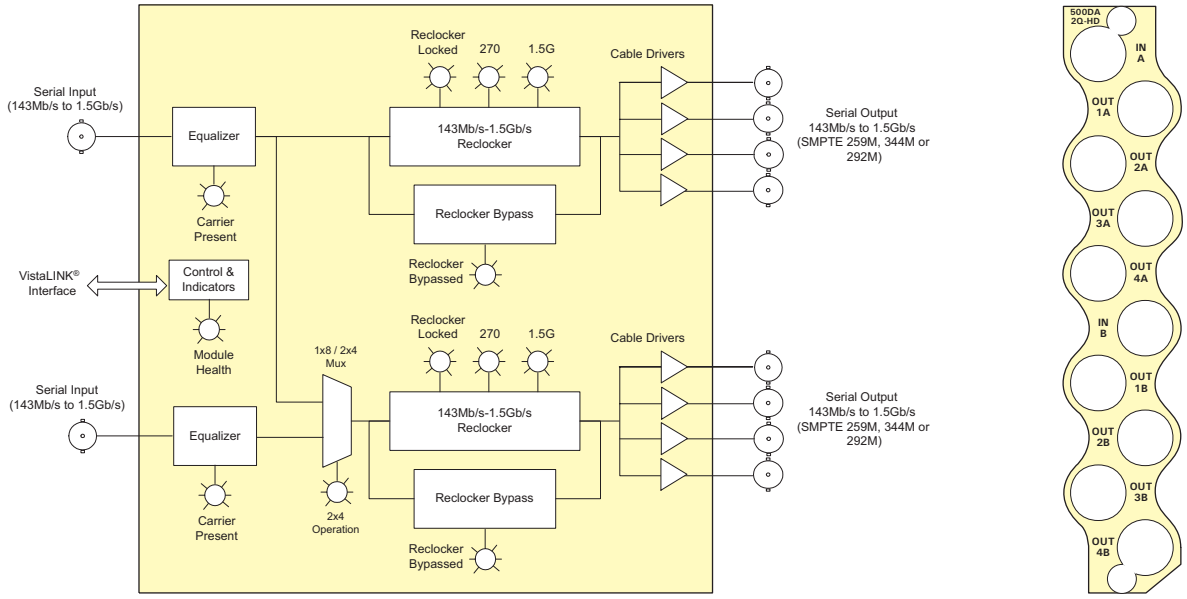

Specifications

Serial Video Input:

Standards	
Reclocked:	SMPTE 292M (1.5Gb/s), SMPTE 259M (143 to 360Mb/s), SMPTE 344M (540Mb/s), DVB-ASI
Non-reclocked:	SMPTE 310M (19.4Mb/s) Any SDI signal in the143Mb/s to 1.5Gb/s range
Connectors:	2 BNC per IEC 60169-8 Amendment 2
Equalization:	
Input A:	Automatic to 100m @ 1.5Gb/s with Belden 1694A or equivalent cable
Input B:	Automatic to 90m @ 1.5Gb/s with Belden 1694A or equivalent cable
Return Loss:	> 10dB up to 1.5Gb/s

Serial Video Outputs:

Number of Outputs:	(mode set by jumper)
2x4 Mode:	4 reclocked from each input Reclockers can by bypassed separately for each input
1x8 Mode:	8 reclocked from Input A (1) Reclockers can by bypassed
Connector:	BNC per IEC 60169-8 Amendment 2
Signal Level:	800mV nominal
DC Offset:	0V ±0.5V
Rise & Fall Time:	200ps nominal
Overshoot:	< 10% of amplitude
Return Loss:	> 10dB up to 1.5Gb/s
Jitter:	< 0.2 UI

Electrical:

Voltage:	+ 12V DC
Power:	6W
EMI/RFI:	Complies with FCC Part 15 Class A EU EMC Directive

Physical:

Number of slots:	1

Ordering Information

500DA2Q-HD	HD/SD SDI Dual Reclocking Distribution Amplifier (2-1x4)

Enclosures	***exponent***
500FR	Compact High Density Distribution Frame
S501FR	Standalone enclosure

500ACO2-HD/SD

Dual HD/SD-SDI Digital Auto Signal 2x1 Changeover

The 500ACO2-HD/SD dual HD/SD Autochangeover is designed to provide extension to the 5600ACO for HD or SD SDI, DVB-ASI, SMPTE 310M, AES audio, bi-level/tri-level syncs and NTSC/PAL video. The unit can also be operated as a standalone changeover unit with two independent 2X1 switchers. The 500ACO uses latching relays to ensure maximum reliability and minimal disruption in the event of any failure.

The 500ACO2-HD/SD is housed in the 500FR ***exponent*** frame that will hold up to 16 modules.

Features & Benefits

- Auto detection of six signal types
- Five modes of operation (including VistaLINK®)
- Auto changeover - two standalone auto changeovers or two link changeovers
- Manual DIP switch control - two independently controlled 2x1 switchers
- GPI Control - two independently GPI controlled 2x1 switchers
- ACO Extension - slave unit of the 5600ACO (requires 5600ACO firmware version 1.2 or higher)
- Support for VistaLINK® monitoring and control
- Fully hot-swappable from front of frame with no BNC disconnect required
- Tally output on Frame Status bus upon loss of input signal for quality monitoring
- Latching relays maintain the current path on loss of power
- VistaLINK® - capable for remote monitoring via SNMP (using VistaLINK® PRO) when installed in 500FR frame with 500FC VistaLINK® Frame Controller

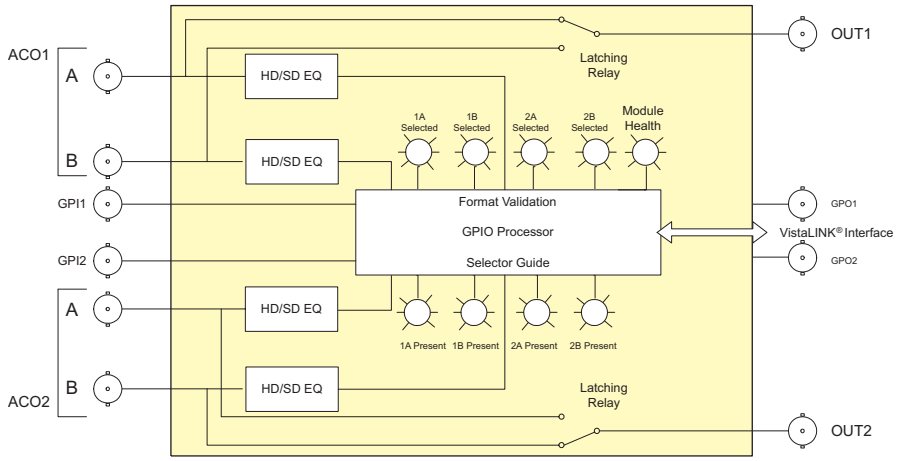

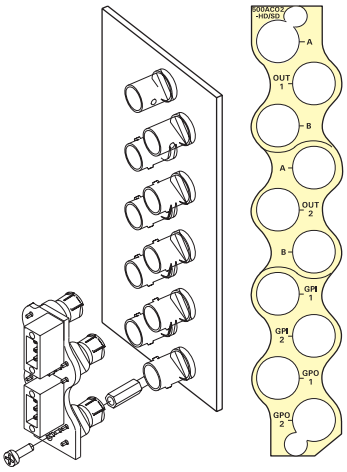

Specifications

Serial Video Input:

Standards:	SMPTE 292M, SMPTE 259M-A, B, C, D (143 to 540 Mb/s), DVB-ASI, bi-level/tri-level syncs or NTSC/PAL video
Connector:	4 BNC per IEC 60169-8 Amendment 2
Max. Cable Length:	100m of Belden 1694A or equivalent cable combined input and output
Return Loss:	10dB up to 1.5Gb/s

Serial Video Outputs:

Number of Outputs:	2 passive relay outputs
Connector:	BNC per IEC 60169-8 Amendment 2
Max. Cable Length:	100m of Belden 1694A or equivalent cable combined input and output
DC Offset:	0V ±0.5V
Return Loss:	10dB up to 1.5Gb/s

AES Input:

Standard:	AES-1992
Number of Inputs:	1
Connector:	3-pin removable terminal strip
Level:	2V to 7V p-p
Coupling:	Transformer
Impedance:	110Ω
Return Loss:	> 14dB 100kHz to 6MHz
Equalization:	Automatic to 300m with Belden 1800B (or equivalent) @ 48kHz AES signal
Sampling Frequency:	32kHz, 44.1kHz, 48kHz and 96kHz

AES Output:

Type:	Balanced AES reclocked
Number of Outputs:	4
Connector:	3-pin removable terminal strip (screwdown adapter module included)
Level:	5V p-p
Impedance:	110Ω
Return Loss:	> 30dB 100kHz to 6MHz

General Purpose Inputs and Outputs:

Type:	
Inputs:	Opto-isolated input with internal pull-up to +5V
Outputs:	Normally 10K internal pull-up to +5V Ground to rear panel when relay is in active position
Connector:	Two 3-pin terminal blocks with one ground each
Signal Level:	+5V nominal

Physical:

Number of slots:	1

Electrical:

Voltage:	+12V DC
Power:	6W
EMI/RFI:	Complies with FCC Part 15 Class A EU EMC Directive

Ordering Information

500ACO2-HD/SD	Dual HD/SD-SDI Digital Auto Signal (2x1) Changeover

Enclosures	***exponent***
500FR	Compact High Density Distribution Frame
S501FR	Standalone enclosure

500DCDA-HD

HD /SD Downconverter & Distribution Amplifier with Closed Caption Monitoring

The 500DCDA-HD is a reclocking 1.5Gb/s digital video distribution amplifier and a high quality downconverter for HDTV signals. It provides 5 reclocked DA outputs and 4 downconverted SDI or composite analog NTSC/PAL outputs (jumper selectable). It accepts all the popular international SMPTE 292M video formats. When the 500DCDA-HD down converts 1080p/23.98s/59.94 with a 3:2 pulldown, the 3:2 pulldown cadence can free run or lock to embedded RP188 time code.

The 500DCDA-HD has color space conversion from ITU rec. 709 to ITU rec. 601, and will provide various down converted formats such as 16:9 letterbox, 14:9 letterbox, 13:9 letterbox, 4:3 center crop, and 4:3 anamorphic squeeze. It supports Widescreen Signaling (WSS).

The module has 10 bit processing and allows for selectable horizontal and vertical filters to control picture sharpness. It also de-embeds two groups of audio and re-embeds the audio on the SDI output in time with the video. All parameters may be controlled by use of the on-screen display menu.

The 500DCDA-HD has a closed caption monitoring capability that decodes CEA-608 or CEA-708 captions that have been encoded into the VANC data space of an HD video input, or CEA-608 captions from a SD video input.

Features & Benefits

- High quality HD ⇨ SD downconversion
- Serial digital 1.5Gb/s HD input per SMPTE 292M
- Supports all popular SMPTE 292M formats
- Supports 270 Mb/s SD input in pass-through model (auto-sensing)
- 5 reclocked DA outputs (output follows input)
- 4 Selectable SDI or Composite Outputs (downconverted HD or reclocked SD)
- Supports 16:9 letterbox, 14:9 letterbox, 13:9 letterbox, 4:3 center crop, and 4:3 anamorphic squeeze aspect ratio conversions
- 1080p/23.98sF conversion to 525i/59.94 with 3:2 pulldown sequence
- HD to SD colour space conversion (ITU rec. 709 to ITU rec. 601)
- De-embeds audio from HD and embeds into SD (2 groups)
- Decodes and displays CEA-608 or CEA-708 captions
- Moves ANC data (e.g. captioning, timecode) from HD to SD
- Support for Widescreen Signaling (WSS) on output
- On-screen aspect ratio marker
- VistaLINK® capable offering remote monitoring, control and configuration capabilities via SNMP
- VistaLINK® is available when modules are used with the 3RU 500FR-C frame and a 500FC VistaLINK® Frame Controller module in slot 1 of the frame using the Evertz VistaLINK® PRO or other third party SNMP manager software

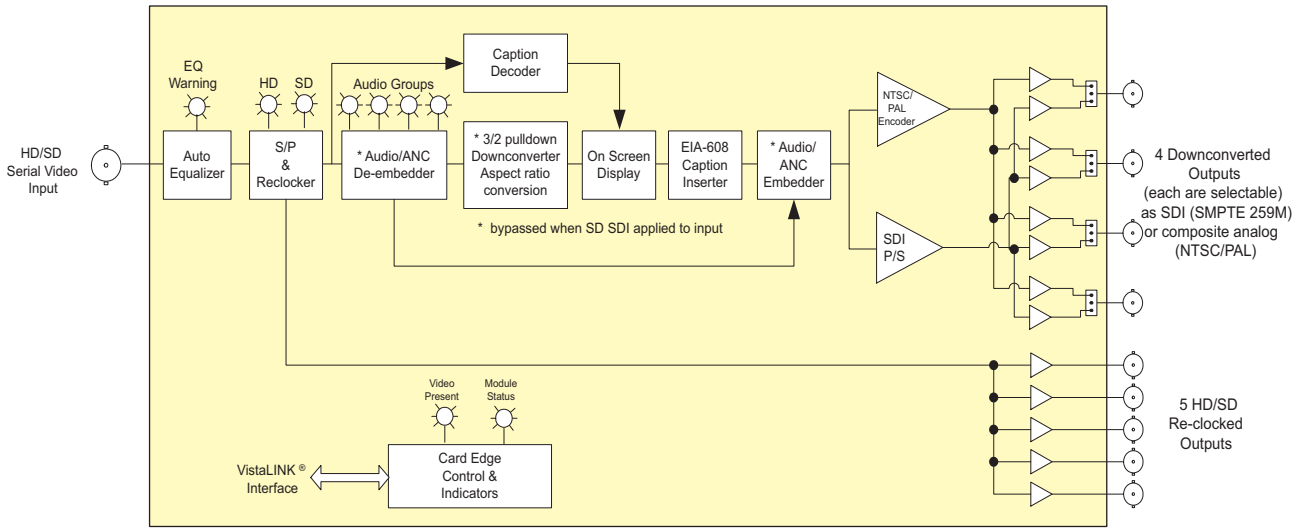

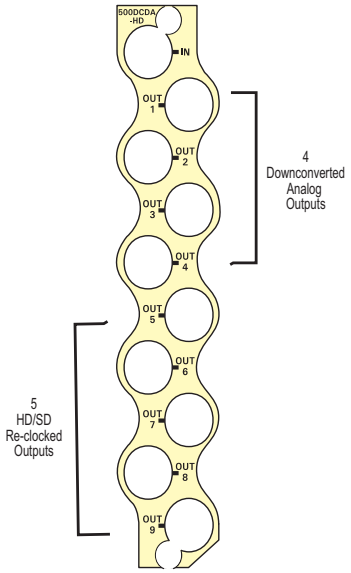

Specifications

Serial Video Input:

Standard:	SMPTE 259M - Pass through mode SMPTE 292M (1.5Gb/s), SMPTE 260M, 274M, 296M, 349M 1080i/60, 1080i/50, 1080i/50sF, 1080p/30sF, 1080p/25sF, 1080p/24sF, 1035i/60, 720p/60, 480p/60 and the 1/1.001 divisor versions where applicable software selectable or autodetect
Connector:	BNC per IEC 60169-8 Amendment 2
Input Equalization:	Automatic to 100m @ 1.5Gb/s with
Belden	1694A or equivalent cable
Return Loss:	> 15dB up to 1.5GHz

Reclocked Serial Video DA Outputs:

Standard:	Same as input (SMPTE 259M or SMPTE 292M)
Number of Outputs:	5 Per Card reclocked
Connector:	BNC per IEC 60169-8 Amendment 2
Signal Level:	800mV nominal
DC Offset:	0V ±0.5V
Rise and Fall Time:	200ps nominal for HD 750ps nominal for SD
Overshoot:	< 10% of amplitude
Return Loss:	> 15dB at 1.5Gb/s
Jitter:	< 0.2 UI

Downconverted Composite Analog Video Outputs:

Standards:	Analog composite NTSC (SMPTE 170M) or Analog composite PAL (ITU-R BT 1700)
Number of Outputs:	Up to 4 Per Card (jumper selectable)
Connectors:	BNC per IEC 60169-8 Amendment 2
Signal Level:	1V p-p nominal
DC Offset:	0V ± 0.1V
Return Loss:	> 35dB up to 5MHz
Frequency Response:	0.2dB to 4MHz
Differential Phase:	< 0.5° (< 0.3° typical)
Differential Gain:	< 0.8% (< 0.5% typical)
SNR:	> 78dB to 5MHz (shallow ramp)
Impedance:	75Ω

Downconverted Serial Video Outputs:

Standard:	SMPTE 259M-C (270Mb/s)
Number of Outputs:	Up to 4 Per Card (jumper selectable)
Connector:	BNC per IEC 60169-8 Amendment 2
Signal Level:	800mV nominal
DC Offset:	0V ±0.5V
Rise and Fall Time:	750ps nominal
Overshoot:	< 10% of amplitude
Return Loss:	> 15dB at 270Mb/s
Jitter:	< 0.2 UI

Input to Output Processing Delay (HD Input Video):

Video Delay:	Just less than 1 to 2 frames depending on input video format, processing mode and phase setting (refer to table 3 in manual) i.e. with 1080i/59.94 input the delay is < 1 Frame delay
Audio Delay:	Audio is delayed and re-embedded in time with the output picture

Electrical:

Voltage:	+12V DC
Power:	10W
EMI/RFI:	Complies with FCC Part 15 Class A EU EMC Directive

Physical:

Number of slots:	1

Ordering Information

500DCDA-HD	HD/SD Downconverter and Distribution Amplifier with Closed Caption Monitoring

Enclosures	***exponent***
500FR	Compact High Density Distribution Frame
S501FR	Standalone enclosure

500DA

SD-SDI Reclocking Distribution Amplifier

The 500DA Reclocking Distribution Amplifier provides inexpensive distribution of your SMPTE 310M and SMPTE 259M serial digital video signal at rates of 19.4Mb/s and 143Mb/s to 540Mb/s. Ideal in applications where a large quantity of outputs are required, the DA features an auto-equalized input with nine isolated reclocked outputs. The input also features an isolated return that is capacitively coupled to ground.

The 500DA has been designed for use as a SMPTE 310M (19.4Mb/s), DVB-ASI or SMPTE 259M distribution product. SMPTE 310M support is selected by setting a rate select jumper.

The 500DA is housed in the 3RU 500FR ***exponent*** frame that will hold up to 16 modules.

Features & Benefits

- Normal mode for SMPTE 259M (143 to 540Mb/s) or DVB-ASI signals - autodetects correct bitrate
- Jumper Selectable mode for SMPTE 310M (19.4Mb/s)
- Fully hot-swappable from front of frame with no BNC disconnect required
- Independent isolated output drivers to ensure no cross channel loading effects (i.e. no need to terminate unused outputs)
- Outputs maintain polarity from input to output for DVB-ASI applications
- Tally output on Frame Status bus upon loss of input signal for quality monitoring
- VistaLINK® capable for remote monitoring via SNMP (using VistaLINK® PRO) when installed in 500FR frame with 500FC VistaLINK® Frame Controller

Input
- SMPTE 259M-A, B, C, D (143Mb/s to 540Mb/s), DVB-ASI, SMPTE 310M (19.4Mb/s) (jumper selectable)
- Return loss > 15dB up to 540Mb/s
- 440m auto eq. at 270Mb/s (Belden 1694A)

Outputs
- 9 reclocked outputs
- Return loss > 15dB up to 540Mb/s
- Wideband jitter < 0.2 UI

Card Edge LEDs
- Reclocker rate (5 LEDs)
- Reclocker Locked
- Max. Equalization Warning
- 310M Reclocker Enable
- Module Health Status

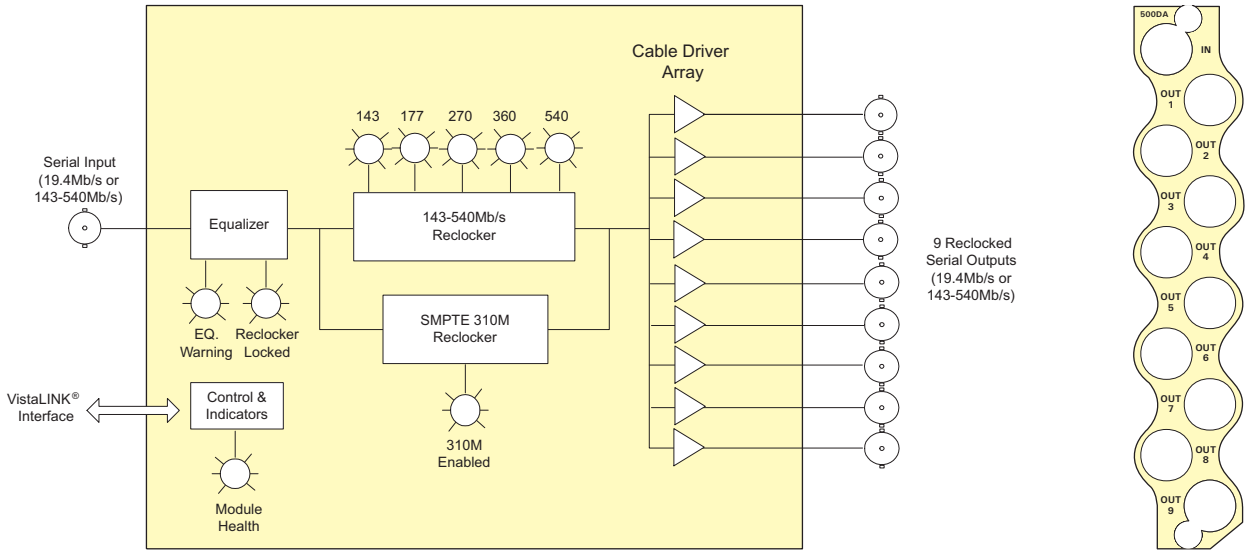

Specifications

Serial Video Input:

Standard:	
259 Mode:	SMPTE 259M-A, B, C, D (143 to 540Mb/s) or DVB-ASI
310 Mode:	SMPTE 310M (19.4Mb/s)
Connector:	BNC per IEC 60169-8 Amendment 2
Equalization:	Automatic to 440m @ 270Mb/s with Belden 1694A
Return Loss:	> 15dB up to 540Mb/s

Serial Video Output:

Number of Outputs:	9 Reclocked
Connector:	BNC per IEC 60169-8 Amendment 2
Signal Level:	800mV nominal
DC Offset:	0V ±0.5V
Rise and Fall Time:	470ps nominal
Overshoot:	< 10% of amplitude
Return Loss:	> 15dB up to 540Mb/s
Wideband Jitter:	< 0.2 UI

Physical:

Number of Slots:	1

Electrical:

Voltage:	+12V DC
Power:	6W
EMI/RFI:	Complies with FCC Part 15 Class A EU EMC Directive

Ordering Information

500DA	SD-SDI Reclocking Distribution Amplifier - (1x9)

Enclosures	***exponent***
500FR	Compact High Density Distribution Frame
S501FR	Standalone enclosure

The 500DA2Q Reclocking Distribution Amplifier provides the highest density DA in the industry allowing up to 32 SD distribution amplifiers in a 3RU rack space. It provides inexpensive distribution of your SMPTE 259M (143 to 360Mb/s), SMPTE 344M (540Mb/s), or SMPTE 310M (19.4Mb/s) signals. The 500DA2Q features two auto-equalized inputs and can be configured either as a single DA with eight reclocked outputs or as two separate DAs with four outputs each.

In the case of dual operation, each DA can be individually set via jumpers for either SMPTE 259M/344M or SMPTE 310M reclocking.

The 500DA2Q is housed in the 3RU 500FR ***exponent*** frame that will hold up to 16 modules.

Features & Benefits

- Normal mode for SMPTE 259M (143-360Mb/s), SMPTE 344M (540Mb/s) or DVB-ASI signals - autodetects correct bit rate
- Jumper selectable mode for SMPTE 310M (19.4Mb/s) signals
- Configurable as 1 DA with 8 outputs or 2 DAs with 4 outputs each
- Fully hot-swappable from front of frame with no BNC disconnect required
- Independent isolated output drivers to ensure no cross channel loading effects (i.e. no need to terminate unused outputs)
- Module health and 2x4 Mode status LEDs
- Reclocker(s) Locked, Cable Length Warning and Video Standard LEDs for each DA channel
- Tally output on Frame Status bus upon loss of input signal
- VistaLINK® capable for remote monitoring via SNMP (using VistaLINK® PRO) when installed in 500FR frame with 500FC VistaLINK® Frame Controller

Inputs
- 2 inputs
- SMPTE 259M (143 to 360Mb/s), SMPTE 344M (540Mb/s), DVB-ASI or SMPTE 310M (19.4Mb/s)
- Return loss > 15dB up to 540Mb/s
- 300m auto eq. at 270Mb/s (Belden 8281)
- 210m auto eq. at 540Mb/s (Belden 8281)

Outputs
- 4 reclocked outputs per input
- Return loss > 15dB up to 540Mb/s
- Jitter < 0.2 UI

Card Edge LEDs
- Module Health Status
- 2x4 mode operation
- Reclocker rate (detection)
- Reclocker Locked
- Max. Equalization Warning

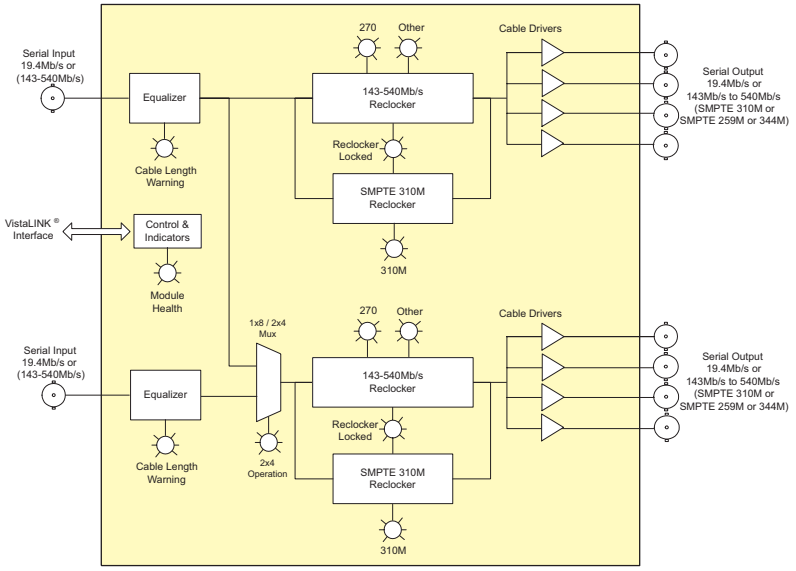

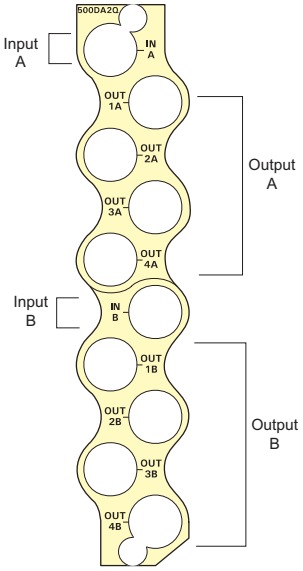

Specifications

Serial Video Input:

Standards:	
Reclocked:	SMPTE 259M (143 to 360Mb/s) SMPTE 344M (540Mb/s), SMPTE 310M (19.4Mb/s) DVB-ASI
Non-reclocked:	Any SD signal in the143Mb/s to 540Mb/s range
Connectors:	2 BNC per IEC 60169-8 Amendment 2
Equalization:	Automatic to 400m @ 270Mb/s with Belden 1694A or equivalent cable (325m in mixed HD/SD frame applications)
Return Loss:	> 15dB up to 270Mb/s

Serial Video Output:

Number of Outputs(mode set by jumper):	
2x4 Mode:	4 reclocked from each input
1x8 Mode:	8 reclocked from Input A (1)
Connector:	BNC per IEC 60169-8 Amendment 2
Signal Level:	800mV nominal
DC Offset:	0V ±0.5V
Rise & Fall Time:	740ps nominal
Overshoot:	< 10% of amplitude
Return Loss:	> 15dB up to 270Mb/s
Jitter:	< 0.2 UI

Physical:

Number of slots:	1

Electrical:

Voltage:	+12V DC
Power:	6W
EMI/RFI:	Complies with FCC Part 15 Class A EU EMC Directive

Ordering Information

500DA2Q	Dual Reclocking Distribution Amplifier (2-1x4)

Enclosures	***exponent***
500FR	Compact High Density Distribution Frame
S501FR	Standalone enclosure

500DA-3G

3Gb/s SDI Reclocking Distribution Amplifier- (1x8)

The 500DA-3G reclocking distribution amplifier provides inexpensive distribution of your SMPTE 424M, SMPTE 292M and SMPTE 259M serial digital video signals at rates of 3Gb/s, 1.5Gb/s and 270Mb/s. The DA supports all other all other SMPTE 344M, SMPTE 259M, SMPTE 310M and DVB-ASI data rates in a non-reclocked mode (540Mb/s, 360Mb/s, 143Mbs/, 19.4Mb/s).

Ideal in applications where a large quantity of outputs are required, the DA features an auto-equalized input with eight isolated reclocked outputs.

The 500DA-3G is housed in in the 3RU 500FR ***exponent*** frame that will hold up to 16 cards.

Features & Benefits

- Normal reclocked mode for SMPTE 424M (3Gb/s), SMPTE 292M (1.5Gb/s) and SMPTE 259M (270Mb/s)
- Jumper selectable non-reclocked mode for all other SMPTE344M, SMPTE 259M, SMPTE 310M and DVB-ASI data rates
- Fully hot-swappable from front of frame with no BNC disconnect required
- Independent isolated output drivers to ensure no cross channel loading effects (ie. no need to terminate unused outputs)
- Outputs maintain polarity from input to output for DVB-ASI applications
- Tally output on Frame Status bus upon loss of input signal for quality monitoring
- VistaLINK® capable for remote monitoring via SNMP (using VistaLINK® PRO) when installed in 500FR frame with 500FC VistaLINK® Frame Controller

Input
- SMPTE 424M (3Gb/s), SMPTE 292M (1.5Gb/s), SMPTE 259M (270Mb/s) when re-clocking
- SMPTE 344M (540Mb/s), SMPTE 259 (360Mb/s, 143Mb/s), SMPTE 310M (19.4Mb/s), DVB-ASI when not re-clocking
- Return Loss > 15dB to 1.5Gb/s and > 10dB up to 3Gb/s
- Auto equalization to 80m at 3Gb/s, 140m @ 1.5Gb/s and 350m @ 270Mb/s

Outputs
- 8 reclocked outputs
- Return Loss > 15dB to 1.5Gb/s
- Wideband jitter < 0.2 UI

Card Edge LEDs
- Reclocker rate (3 LEDS)
- Reclocker locked
- Reclocker bypass
- Max Equalization Warning
- Module Health Status

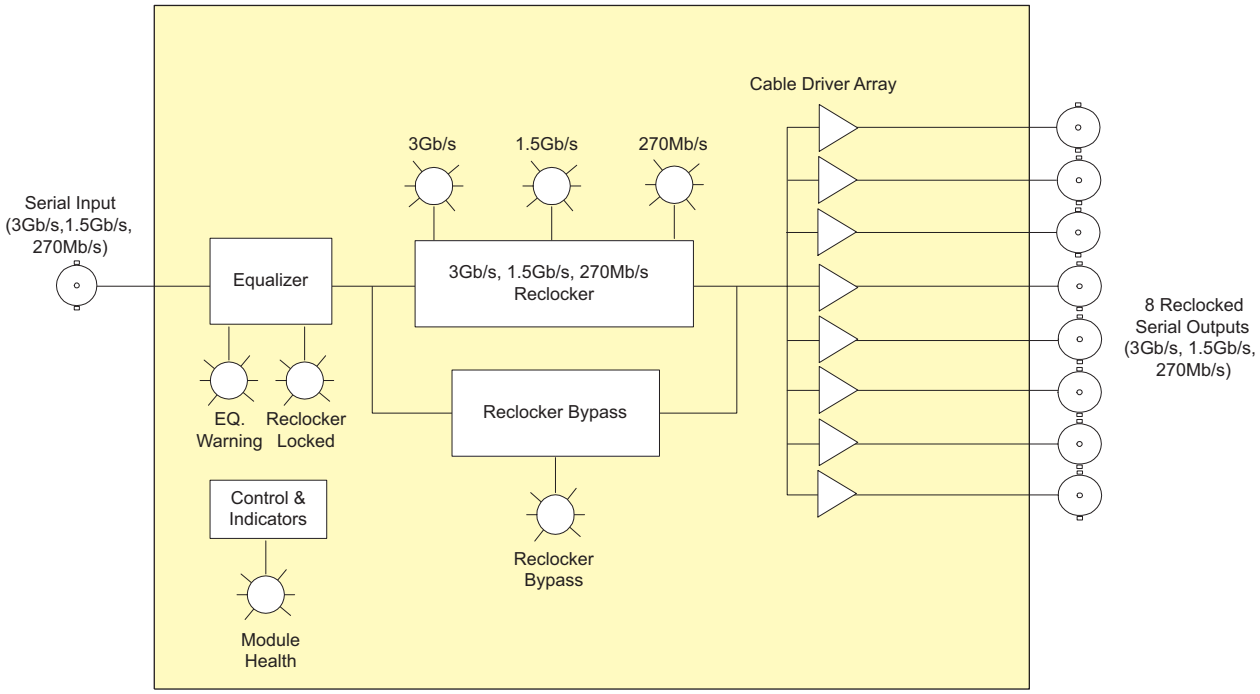

Specifications

Serial Video Input:

Reclocked Mode:	SMPTE 424M (3Gb/s)
	SMPTE 292M (1.5Gbs)
	SMPTE 259M (270Mb/s)
Non Reclocked Mode:	
	SMPTE 344M (540Mb/s)
	SMPTE 259M (360Mb/s, 143Mb/s)
	SMPTE 310M (19.4Mb/s), DVB-ASI
Connector:	BNC per IEC 60169-8 Amendment 2
Equalization:	Automatic to 80m @ 3Gb/s, 140m @ 1.5Gb/s & 350m @ 270Mb/s
Return Loss:	> 15dB up to 1.5Gb/s
	> 10dB up to 3Gb/s

Serial Video Output:

Number of Outputs:	8 Reclocked
Connector:	BNC per IEC 60169-8 Amendment 2
DC Offset:	0V ± 0.5V
Rise and Fall Time:	150ps @ 3g/HD, 470ps SD nominal
Return Loss:	> 15dB up to 1.5Gb/s
Wideband Jitter:	< 0.2 UI

Ordering Information

500DA-3G	3Gb/s SDI Reclocking Distribution Amplifier - (1x8)

Enclosures	***exponent***
500FR	Compact High Density Distribution Frame
S501FR	Standalone enclosure

The 500VMDA Reclocking Distribution Amplifier provides inexpensive distribution and monitoring of your SMPTE 259M (270MB/s) serial digital video signal. The DA features an auto-equalized input with nine outputs that can be selected as either SDI or composite analog. The 500VMDA in conjunction with the 500DCDA-HD gives an upgrade path to monitoring future HD-SDI signals without having to re-wire your installation.

The 500VMDA is housed in the 3RU 500FR ***exponent*** frame that will hold up to 16 modules.

Features & Benefits

- Fully hot-swappable from front of frame with no BNC disconnect required
- Tally output on Frame Status bus upon loss of input signal
- VistaLINK® capable for remote monitoring via SNMP (using VistaLINK® PRO) when installed in 500FR frame with 500FC VistaLINK® Frame Controller

Input
- Supports SMPTE 259M-C (270Mb/s) video with embedded audio

Output
- 9 outputs selectable as SD-SDI or composite analog (NTSC/PAL)
- Independent isolated output drivers to ensure no cross channel leading effects (i.e. no need to terminate unused outputs)
- Selectable NTSC pedestal on/off
- Passes embedded audio to SD-SDI output

Card Edge LEDs
- Reclocker Locked
- Max. Equalization Warning
- Module Health Status
- Video present, cable length warning and video standard LEDs

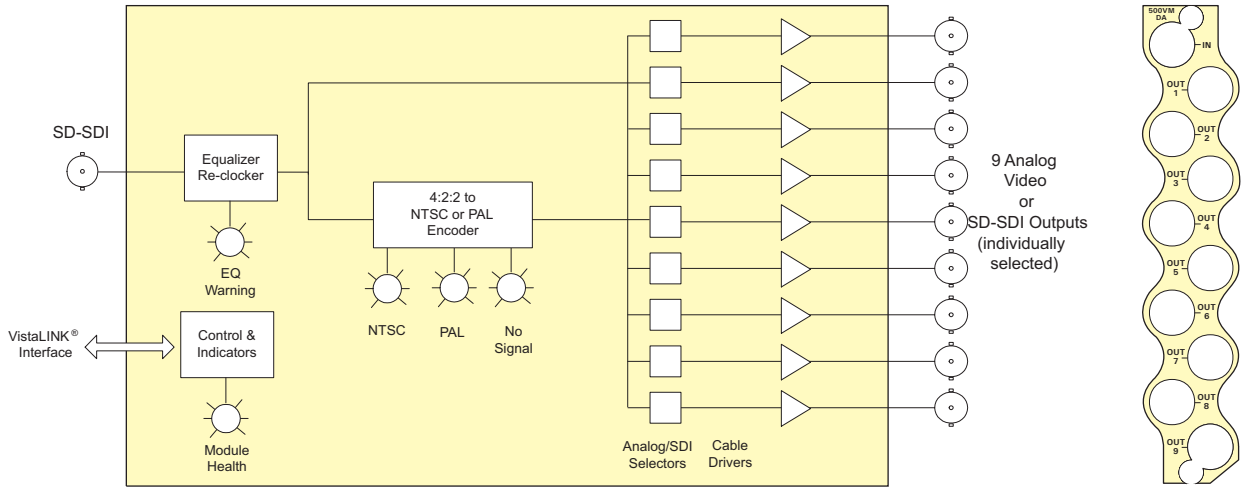

Specifications

Serial Video Input:

Standards:	SMPTE 259M-C (270Mb/s) 525 or 625 line
Connector:	1 BNC per IEC 60169-8 Amendment 2
Equalization:	Automatic to 430m @ 270Mb/s with Belden 1694A or equivalent cable
Return Loss:	> 15dB up to 270Mb/s
Embedded Audio:	SMPTE 272M-A

Serial Video Output:

Number of Outputs:	Up to 9 reclocked outputs (jumper selectable)
Connector:	BNC per IEC 60169-8 Amendment 2
Signal Level:	800mV nominal
DC Offset:	0V ±0.5V
Rise and Fall Time:	470ps nominal
Overshoot:	< 10% of amplitude
Return Loss:	> 15dB up to 270Mb/s
Wide Band Jitter:	< 0.2 UI

Analog Video Output:
(User selectable as additional SDI Outputs)

Number of Outputs:	Up to 9 (jumper selectable)
Standards:	NTSC, SMPTE 170M if input is 525i/59.94 PAL-B ITU-RBT 1700
Connectors:	BNC per IEC 60169-8 Amendment 2
Signal Level:	1V p-p nominal
DC Offset:	0V ±0.1V
Return Loss:	> 35dB up to 5MHz

Electrical:

Voltage:	+12V DC
Power:	6W
EMI/RFI:	Complies with FCC Part 15 Class A EU EMC Directive

Physical:

Number of Slots:	1

Ordering Information

500VMDA	SD-SDI Monitoring Reclocking Distribution Amplifier

Enclosures	***exponent***
500FR	Compact High Density Distribution Frame
S501FR	Standalone enclosure

500ADA

Analog Video Distribution Amplifier

The 500ADA Analog Video Distribution Amplifier is a general purpose amplifier for distributing 75Ω analog signals. The 500ADA features one balanced input with nine outputs. The 500ADA has been designed to distribute a wide range of analog video signals. It can also distribute other pulses and signals that do not exceed 2V p-p.

The 500ADA is housed in the 3RU 500FR ***exponent*** frame that will hold up to 16 modules.

Features & Benefits

- 75Ω or high impedance input (jumper selectable)
- High common mode range and common mode rejection ratio (CMRR)
- Gain control
- Jumper selectable AC or DC coupling
- Looping feature with external "T" connector
- Consistent input impedance if card power is lost
- VistaLINK® capable for remote monitoring via SNMP (using VistaLINK® PRO) when installed in 500FR frame with 500FC VistaLINK® Frame Controller

Card Edge LEDs
- Module status/Local Fault
- Power supply status

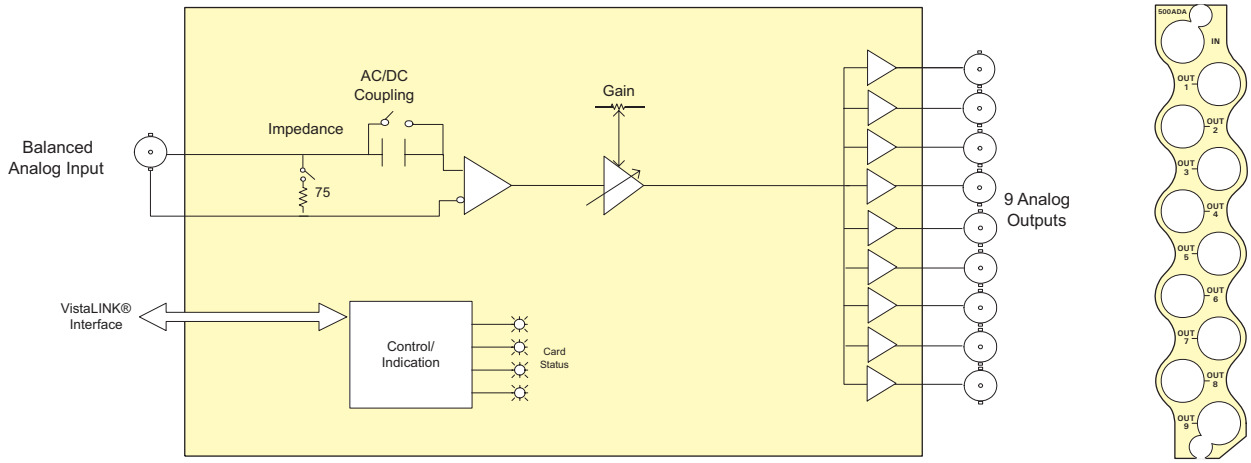

Specifications

Analog Video Input:

Standards:	Any analog video format, up to 2V p-p and 30MHz bandwidth
Connector:	1 BNC per IEC 60169-8 Amendment 2
Common mode range:	> 6V p-p
CMRR:	> 70dB to 1kHz
Signal amplitude:	2.5V p-p max
Impedance:	75Ω terminated, 35kΩ Hi-Z (jumper selectable)
Coupling:	AC or DC (jumper selectable)
Return loss:	> 40dB to 10MHz, > 30dB to 30MHz

Analog Video Outputs:

Number of Outputs:	9 Per Card
Connector:	BNC per IEC 60169-8 Amendment 2
Output impedance:	75Ω
Gain control range:	±5dB
Freq. Response:	< ±0.05dB (to 5.5MHz)
Differential Gain:	< 0.17%
Differential Phase:	< 0.19°
C/L gain inequality:	< ±0.1%
C/L Delay:	< ±2ns
Output isolation:	42dB to 10MHz, 32dB to 30MHz
Output return loss:	> 40dB to 30MHz
Noise performance:	< -78dB RMS NTC7 weighting < -70dB RMS 15kHz to 5.5MHz

Electrical:

Voltage:	+12V DC
Power:	1.2W
EMI/RFI:	Complies with FCC Part 15 Class A, EU EMC Directive

Physical:

Number of Slots:	1

Ordering Information

500ADA	Analog Video Distribution Amplifier (1x9)

Enclosures	***exponent***
500FR	Compact High Density Distribution Frame
S501FR	Standalone enclosure

The 500ADA-EQ Analog Video Distribution Amplifier is a general purpose amplifier for distributing 75Ω analog video signals.

The 500ADA-EQ features one balanced equalized input with nine unbalanced outputs. The 500ADA-EQ amplifier has been designed to distribute a wide range of analog video signals. It can also distribute other pulses and signals that are less than 2V p-p.

The 500ADA-EQ is housed in the 3RU 500FR ***exponent*** frame that will hold up to 16 modules.

Features & Benefits

- 75Ω or high impedance input (jumper selectable)
- High common mode range and common mode rejection ratio (CMRR)
- Gain control
- Jumper selectable AC or DC coupling
- Jumper selectable fast or slow back porch clamp
- DC level control when clamp is enabled
- Cable equalizer adjustment range: 0 to 300m of 8281 or 1694
- Looping feature with external "T" connector
- Consistent input impedance if card power is lost
- VistaLINK® capable for remote monitoring via SNMP (using VistaLINK® PRO) when installed in 500FR frame with 500FC VistaLINK® Frame Controller

Card Edge LEDs
- Module status/Local Fault
- Power supply status
- EQ Warning

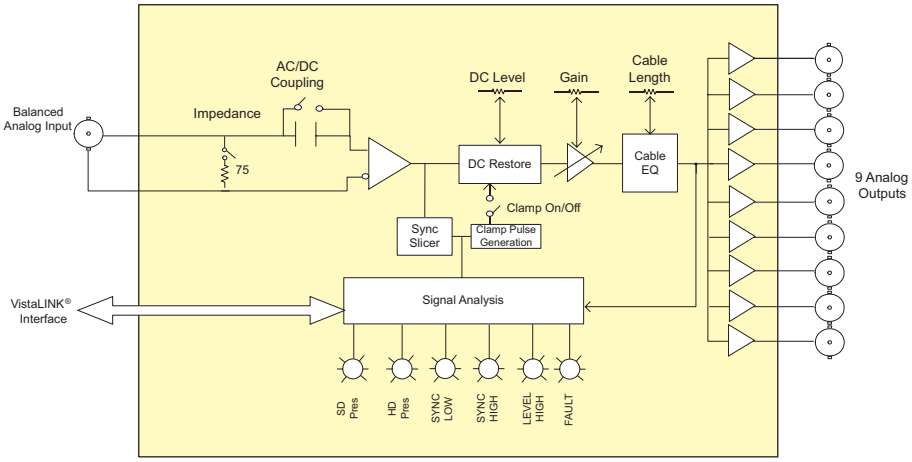

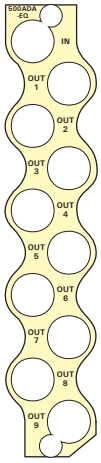

Specifications

Analog Video Input:

Standards:	Any analog video format, up to 2V p-p and 30MHz bandwidth
Connector:	1 BNC per IEC 60169-8 Amendment 2
Common mode range:	> 6V p-p
CMRR:	> 70dB to 1kHz
Signal amplitude:	2.5V p-p max
Cable equalizer:	0 to 300m of Belden 8281 or 1694A cable
Impedance:	75Ω terminated, 35kΩ Hi-Z (jumper selectable)
Coupling:	AC or DC (jumper selectable)
Return loss:	> 40dB to 10MHz, > 30dB to 30MHz
Clamp range:	> ±600mV
Fast clamp attenuation of 60Hz:	> 36dB

Analog Video Outputs:

Number of Outputs:	9 Per Card
Connector:	BNC per IEC 60169-8 Amendment 2
Output impedance:	75Ω
Gain control range:	±5dB
DC Level:	< ±100mV (with DC Coupling active and back porch clamp disabled)
DC Level Control range:	< ± 200mV (with back porch clamp enabled)
Freq. Response:	< ±0.05dB no equalization < ±0.09dB for 5 to 100m Belden 8281 or 1694A (to 5.5MHz) < ±0.15dB for 100 to 300m Belden 8281 or 1694A (to 5.5MHz)
Differential Gain:	< 0.17% 0 to 300m
Differential Phase:	< 0.19° 0 to 300m
C/L gain inequality:	< ±0.1% for all cable lengths
C/L Delay:	< ±2ns
Output isolation:	> 42dB to 10MHz, > 32dB to 30MHz
Output return loss:	> 40dB to 30MHz
Noise performance:	< -78dB RMS NTC7 weighting, < -70dB RMS 15kHz to 5.5MHz

Electrical:

Voltage:	+12V DC
Power:	1.2W
EMI/RFI:	Complies with FCC Part 15 Class A EU EMC Directive

Physical:

Number of Slots:	1

Ordering Information

500ADA-EQ	Analog Video Distribution Amplifier with Cable Equalization (1x9)

Enclosures	***exponent***
500FR	Compact High Density Distribution Frame
S501FR	Standalone enclosure

500DA-AESB

Balanced AES Audio Distribution Amplifier

The 500DA-AESB is a four output reclocking and auto equalizing DA for balanced 110Ω AES signals. The DA automatically equalizes up to 300m of Belden 1800B cable and provides reclocked outputs with sampling frequencies of 32kHz, 44.1kHz, 48kHz and 96kHz. The 500DA-AESB card edge LED indicators provide quick and accurate assessment of the incoming signal integrity.

The 500ADA-AESB is housed in the 3RU 500FR ***exponent*** frame that will hold up to 16 modules.

Features & Benefits

- Data reclocking provides jitter reduction
- VistaLINK® capable for remote monitoring via SNMP (using VistaLINK® PRO) when installed in 500FR frame with 500FC VistaLINK® Frame Controller

Inputs
- AES3-1992 standard for AES audio on 110Ω twisted pair cable
- EQ and reclock provide extended cable length compensation (> 300m)
- Transformer coupled 110Ω balanced input

Outputs
- Four 110Ω balanced

Card Edge LEDs
- Module Health Status
- Error LED indication for input PLL out of lock, parity error or biphase coding error
- Reclocked locked

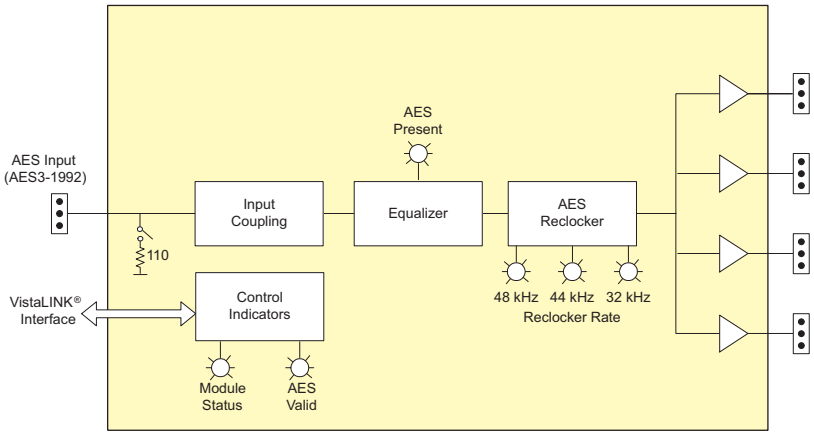

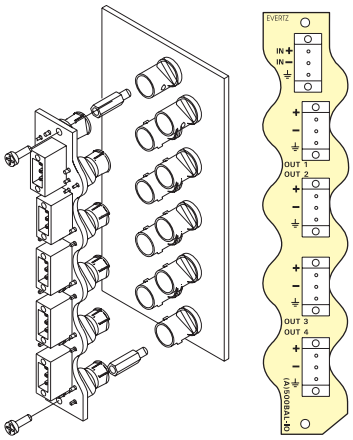

Specifications

AES Input:

Standard:	AES3-1992
Number of Inputs:	1
Connector:	3-pin removable terminal strip
Input Level:	2 to 7V p-p
Coupling:	Transformer
Input Impedance:	110Ω
Return Loss:	> 14dB 100kHz to 6MHz
Equalization:	Automatic to 300m with Belden 1800B (or equivalent) @ 48kHz AES signal
Sampling Frequency:	32kHz, 44.1kHz, 48kHz and 96kHz

AES Output:

Number of Outputs:	4 Balanced AES reclocked
Connector:	3-pin removable terminal strip (screwdown adapter module included)
Output Level:	5V p-p
Output Impedance:	110Ω
Return Loss:	> 30dB 100kHz to 6MHz

Physical:

Number of Slots:	1

Electrical:

Voltage:	+12V DC
Power:	5W
EMI/RFI:	Complies with FCC Part 15 Class A EU EMC Directive

Ordering Information

500DA-AESB	Balanced AES Audio Distribution Amplifier (1x4)

Enclosures	***exponent***
500FR	Compact High Density Distribution Frame
S501FR	Standalone enclosure

The 500DA-AESU is a nine output reclocking and auto equalizing DA for unbalanced 75Ω AES signals. The DA automatically equalizes up to 1500m of Belden 1694A coax and provides reclocked outputs with sampling frequencies of 32kHz, 44.1kHz, 48kHz and 96kHz. The 500DA-AESU card edge LED indicators provide quick and accurate assessment of the incoming signal integrity.

The 500ADA-AESU is housed in the 3RU 500FR ***exponent*** frame that will hold up to 16 modules.

Features & Benefits

- Data reclocking provides jitter reduction
- VistaLINK® capable for remote monitoring via SNMP (using VistaLINK® PRO) when installed in 500FR frame with 500FC VistaLINK® Frame Controller

Inputs
- SMPTE 276M standard for AES audio on 75Ω coax
- EQ and reclock provide extended cable length compensation (> 1500m)
- Transformer coupled 75Ω unbalanced input

Outputs
- Nine 75Ω coax outputs

Card Edge LEDs
- Module Health Status
- Error LED indication for input PLL out of lock, parity error or biphase coding error
- Reclocker locked

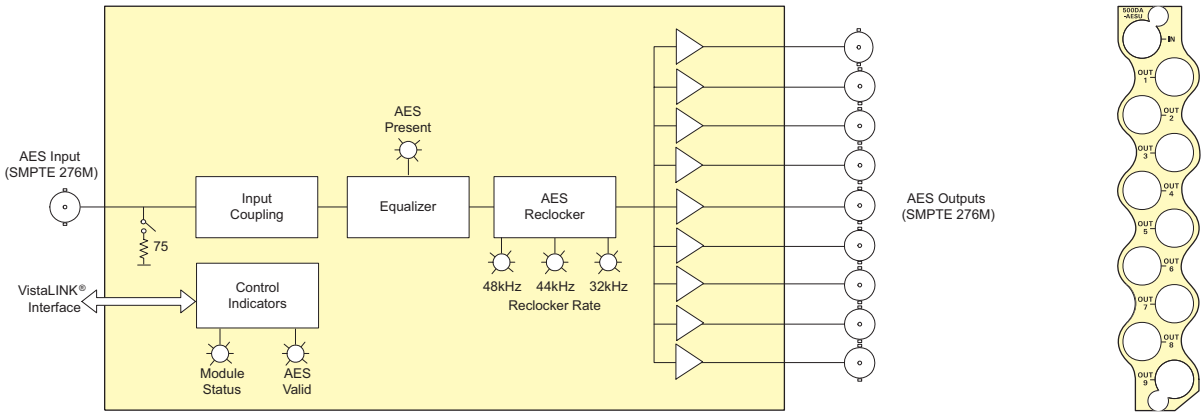

Specifications

AES Input:

Standard:	SMPTE 276M
Number of Inputs:	1
Connector:	BNC per IEC 60169-8 Amendment 2
Input Level:	1V p-p
Coupling:	Transformer
Input Impedance:	75Ω
Return Loss:	> 25dB 100kHz to 6MHz
Equalization:	Automatic to 1500m with Belden 1694A (or equivalent) @ 48kHz AES signal
Sampling Frequency:	32kHz, 44.1kHz, 48kHz and 96kHz

AES Output:

Number of Outputs:	9 Unbalanced AES
Connector:	BNC per IEC 60169-8 Amendment 2
Output Level:	1V p-p
Output Impedance:	75Ω
Return Loss:	> 25dB 100kHz to 6MHz

Physical:

Number of Slots:	1

Electrical:

Voltage:	+12V DC
Power:	5W
EMI/RFI:	Complies with FCC Part 15 Class A EU EMC Directive

Ordering Information

500DA-AESU	Unbalanced AES Audio Distribution Amplifier (1x9)

Enclosures	***exponent***
500FR	Compact High Density Distribution Frame
S501FR	Standalone enclosure

500DA2Q-AESU

Dual Unbalanced AES Audio Distribution Amplifier

The 500DA2Q-AESU provides an economical method of distribution for your AES digital audio signals. The DAs feature two auto-equalized inputs with four reclocked outputs each. The module can also be configured for one input with eight reclocked outputs for applications where a larger number of outputs is required.

The 500DA2Q-AESU is housed in the 500FR ***exponent*** frame that will hold up to 16 modules.

Features & Benefits

- Supports SMPTE 276M standard for AES audio on 75Ω coax
- 2 independent distribution amplifiers with 4 reclocked outputs provide jitter reduction
- Can be configured as one 8 output distribution amplifier
- Automatic equalization provides extended cable length capabilities
- Card edge indicators for PLL out of lock, parity error or bi-phase coding errors
- Tally output of input error conditions
- VistaLINK® capable for remote monitoring via SNMP (using VistaLINK® PRO) when installed in 500FR frame with 500FC VistaLINK® Frame Controller

Inputs
- 2 inputs
- SMPTE 276M standard for AES audio on 75Ω coax
- EQ and reclock provide extended cable length compensation (> 1500m)
- Transformer coupled 75Ω unbalanced input

Outputs
- 4 reclocked outputs per input

Card Edge LEDs
- Module Health Status
- Error LED indication for input PLL out of lock, parity error or biphase coding error
- Reclocker locked

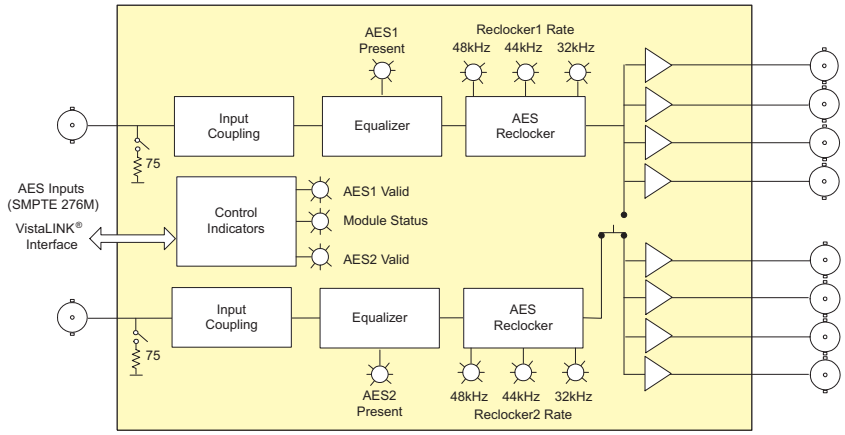

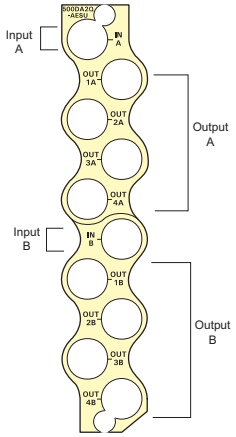

Specifications

AES Audio Inputs:

Number of Inputs:	2
Standard:	SMPTE 276M, single ended AES
Connectors:	BNC per IEC 60169-8 Amendment 2
Coupling:	Transformer
Signal Level:	1V p-p ±0.1V
Equalization:	Automatic 1500m @48kHz with Belden 1694A or equivalent cable
Impedance:	75Ω
Return Loss:	> 25dB 100kHz to 6MHz
Sampling Rate:	32kHz, 44.1kHz, 48kHz and 96kHz

AES Audio Outputs:

Number of Outputs:	4 reclocked outputs per input (normal) 8 outputs from input 1 (jumper selectable)
Standard:	SMPTE 276M, single ended AES
Connectors:	BNC per IEC 60169-8 Amendment 2
Signal Level:	1V p-p ±0.1V
Impedance:	75Ω unbalanced
Return Loss:	> 25dB 100kHz to 6MHz

Electrical:

Voltage:	+ 12V DC
Power:	1.2W

Physical:

Number of slots:	1

Ordering Information

500DA2Q-AESU	Dual Unbalanced AES Audio Distribution Amplifier

Enclosures	***exponent***
500FR	Compact High Density Distribution Frame
S501FR	Standalone enclosure

500AMDA-AESU

Unbalanced AES Audio DAC & Distribution Amplifier

The 500AMDA-AESU is a five output reclocking and auto equalizing AES Audio DAC & Distribution Amplifier for unbalanced 75Ω AES signals. It is also a high quality 24-bit audio DAC. The 500AMDA-AESU automatically equalizes up to 1000m of Belden 1694A coax and provides reclocked outputs. The 500AMDA-AESU also converts AES/EBU digital signal to 2 balanced analog audio outputs. The input sample rates supported are 32kHz, 44.1kHz and 48kHz. Analog audio output levels may be set individually from the front panel.

Level control is provided via a card edge toggle. The full scale digital signal can be calibrated to produce analog peak levels ranging from 12dBu to 24.8dBu with 0.1dB resolution. The 500AMDA-AESU card edge LED indicators provide quick and accurate assessment of the incoming signal integrity. Balanced analog audio is provided via a terminal strip adapter.

The 500AMDA-AESU is housed in the 3RU 500FR ***exponent*** frame that will hold up to 16 modules.

Features & Benefits

- 24-bit, high-quality D/A conversion
- 44.1kHz, 32kHz and 48kHz sampling rates supported
- 0dBFS programmable from 12dBu to 24.8dBu
- Support for 2 channels of balanced analog audio (1 AES/EBU)

Inputs
- AES3-2003 standard for AES audio on 75Ω coax
- EQ and reclock provide extended cable length compensation (> 1000m)

Outputs
- Five 75Ω coax outputs
- 2 balanced analog audio outputs

Card Edge LEDs
- Module Health Status
- AES signal present
- Detected AES sample rate
- PCM versus non-PCM data
- Audio level bargraph with ballistics
- VistaLINK® capable for remote monitoring via SNMP (using VistaLINK® PRO) when installed in 500FR frame with 500FC VistaLINK® Frame Controller

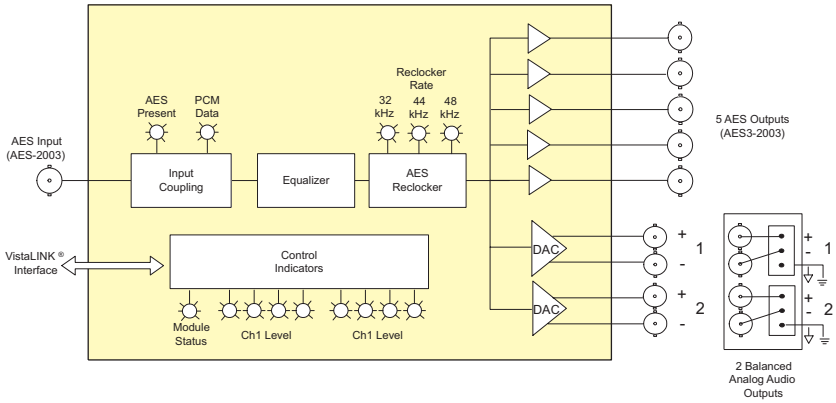

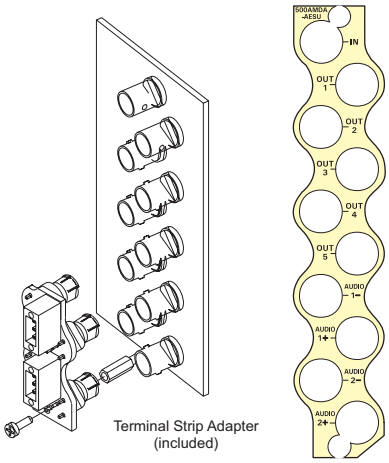

Specifications

AES Audio Input:

Number of Inputs:	1
Standard:	AES3-2003, unbalanced AES
Connectors:	BNC per IEC 60169-8 Amendment 2
Signal Level:	0.1 to 2.5V p-p
Equalization:	> 1000m @ 48kHz with 1V p-p drive and Belden 1694A or equivalent coax cable
Resolution:	24 bits
Sample Rate:	32, 44.1, 48 kHz; ±100 ppm
Input Impedance:	75Ω, AC-coupled
Return Loss:	> 25dB, 100kHz to 6.0MHz
BNC Grounding:	AC-coupled (for 60Hz ground loop current protection)

AES Audio Outputs:

Number of Outputs:	5
Standard:	AES3-2003, unbalanced AES
Connectors:	BNC per IEC 60169-8 Amendment 2
Sample Rate:	Same as input
Impedance:	75Ω unbalanced
Return Loss:	> 25dB, 100kHz to 6.0MHz

Analog Audio Outputs:

Number of Outputs:	2
Type:	Balanced analog audio
Connector:	Two 3-pin removable terminal strips on BNC adapter panel
Output Impedance:	66Ω
Output Load:	600Ω or high impedance (10kΩ)
Signal Level:	0dB FS ⇨ +12 to +24.8dBu into 10kΩ load (user settable)
DC Offset:	< ±30mV
Freq. Response:	< ±0.05dB (20Hz to 20kHz)
Dynamic Range:	24 bits
THD+N:	< -100dB RMS @ 1kHz, with 24dBu output
SNR:	> 110dB RMS (20Hz to 20kHz), "A" weighted
Inter-Channel Phase Error:	< ±1° (20Hz to 20kHz)
Crosstalk Isolation:	> 110dB RMS (20Hz to 20kHz), unweighted
Digital to Analog Delay:	0.95m sec

Electrical:

Voltage:	+12V DC
Power:	6W
EMI/RFI:	Complies with FCC Part 15 Class A EU EMC Directive

Physical:

Number of slots:	1

Ordering Information

500AMDA-AESU	Unbalanced AES Audio DAC & Distribution Amplifier (5 AES out & 2 balanced analog out)

Enclosures	***exponent***
500FR	Compact High Density Distribution Frame
S501FR	Standalone enclosure

500ADA-AUD

Analog Audio Distribution Amplifier

The 500ADA-AUD Analog Audio Distribution Amplifier is a general purpose 1x4 amplifier for distributing analog audio signals.

The 500ADA-AUD can be operated with either differential or single ended inputs and offers a wide range of gain adjustment to handle a wide variety of input signals.

The 500ADA-AUD is housed in the 500FR ***exponent*** frame that will hold up to 16 modules.

Features & Benefits

- Differential and single ended input (automatic single ended to differential conversion)
- High impedance inputs
- Low impedance outputs
- Wide gain adjustment range
- High common mode range and common mode rejection ratio
- Very high SNR
- Very low THD+N
- VistaLINK® capable for remote monitoring via SNMP (using VistaLINK® PRO) when installed in 500FR frame with 500FC VistaLINK® Frame Controller

Card Edge LEDs
- Module status/Local Fault
- Power supply status

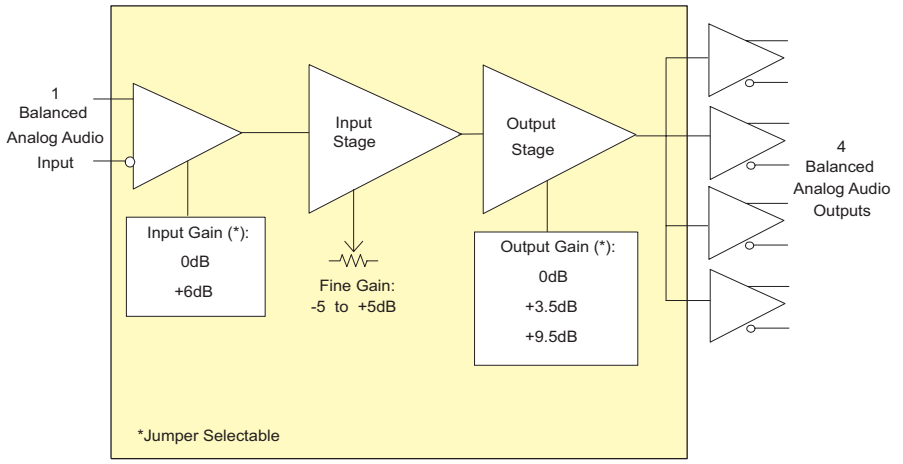

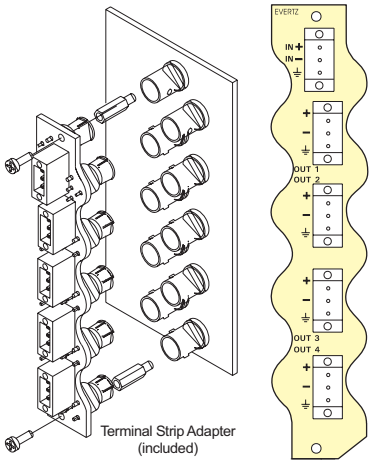

Specifications

Analog Audio Input:

Standards:	Any analog audio signal
Number of inputs:	1 (Balanced or Single ended)
Connectors:	3-pin removable terminal strips
Input step gain:	0dB or +6dB (configurable with jumpers)
Fine gain control:	-5 to +5dB (card edge pot adjustable)
Maximum input level:	
0dB input gain:	+34dBu
+6dB input gain:	+28dBu
Common mode rejection:	> 105dB @ 60Hz
Common mode range:	
0dB input gain:	> ±22V
+6dB input gain:	> ±7V
Input impedance:	
0dB input gain:	44kΩ
+6dB input gain:	26kΩ

Analog Audio Outputs:

Number of Outputs:	4
Connectors:	3-pin removable terminal strips
Output step gain:	0, 3.5 or 9.5dB (configurable with jumpers)
Max. output level:	+28dBu across hi-impedance load +24dBu into 600Ω load
Output impedance:	66Ω
Freq. Response:	±0.03dB 20Hz to 20kHz
THD+N:	0.001% 20Hz to 20kHz @ 28dBu, unweighted RMS
Output Isolation:	> 100dB @ 1kHz, 100dB @ 20kHz

Electrical:

Voltage:	+12V DC
Power:	6W

Physical:

Number of slots:	1

Ordering Information

500ADA-AUD	Analog Audio Distribution Amplifier

Enclosures	***exponent***
500FR	Compact High Density Distribution Frame
S501FR	Standalone enclosure

The 500ADA-W is a SDIF-2 Word Clock distribution amplifier. The input can be configured to be high impedance or terminated to 75Ω. The 500ADA-W provides continuous voltage gain adjust from -6dB to +6dB. The module supports a maximum output signal of 5V.

The 500ADA-W is housed in the 3RU 500FR ***exponent*** frame that will hold up to 16 modules.

Features & Benefits

- Jumper selectable 75Ω or high impedance (1kΩ typical) input
- DA has voltage gain adjustment range from -6dB to +6dB
- Outputs can drive into 75Ω loads

Card Edge LEDs
- Module status/Local Fault
- Power supply status

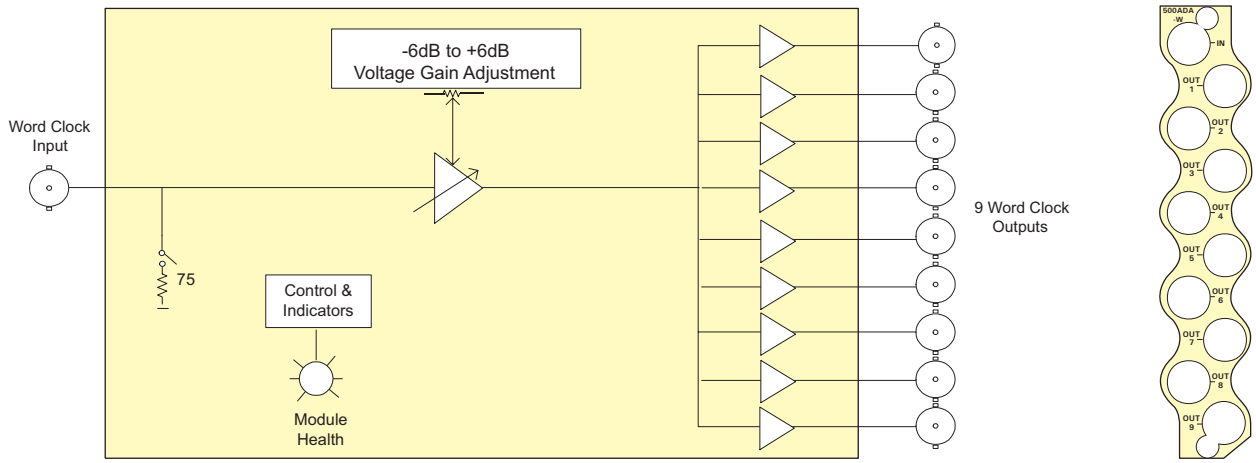

Specifications

Word Clock Input:

Standard:	SDIF-2 Word Clock
Number of Inputs:	1
Connector:	BNC per IEC 60169-8 Amendment 2
Level:	0 to 5V (terminated or unterminated)
Impedance:	Selectable 75Ω or high impedance (1kΩ typical)

Word Clock Outputs:

Number of outputs:	9
Connector:	BNC per IEC 60169-8 Amendment 2
Output impedance:	75Ω
Max. Output levels:	5V into 75Ω load 10V into high impedance load
Min. Output Level:	0V
Voltage Gain Range:	-6dB to +6dB
Frequency range:	28kHz-50kHz

Electrical:

Voltage:	+12V DC
Power:	1.2W
EMI/RFI:	Complies with FCC Part 15 Class A, EU EMC Directive

Physical:

Number of Slots:	1

Ordering Information

500ADA-W	Word Clock Distribution Amplifier (1x9)

Enclosures	***exponent***
500FR	Compact High Density Distribution Frame
S501FR	Standalone enclosure

520DARS-W

Unbalanced AES Word Clock Extractor Audio Distribution Amplifier

The 520DARS-W provides a compact method of extracting word clock from your AES digital audio reference signals. The 520DARS-W features one auto-equalized input with 4 word clock outputs and 5 reclocked AES audio outputs.

The 520DARS-W can be used in conjunction with the 5600MSC Master Clock/SPG system.

The 520DARS-W is housed in the 3RU 500FR ***exponent*** Frame that will hold up to 16 modules.

Features & Benefits

- Supports AES audio over 75Ω coax (SMPTE 276M)
- 4 word clock outputs (AES11-2003)
- 5 reclocked AES outputs provides jitter reduction (SMPTE 276M)
- Automatic equalization provides extended cable length capabilities
- High impedance or 75Ω termination on input (jumper selectable)
- Card edge indicators for AES present, reclocker rate, and AES validity bit
- Tally output of input error conditions
- VistaLINK® capable for remote monitoring via SNMP (using VistaLINK® PRO) when installed in 500FR frame with 500FC VistaLINK® Frame Controller

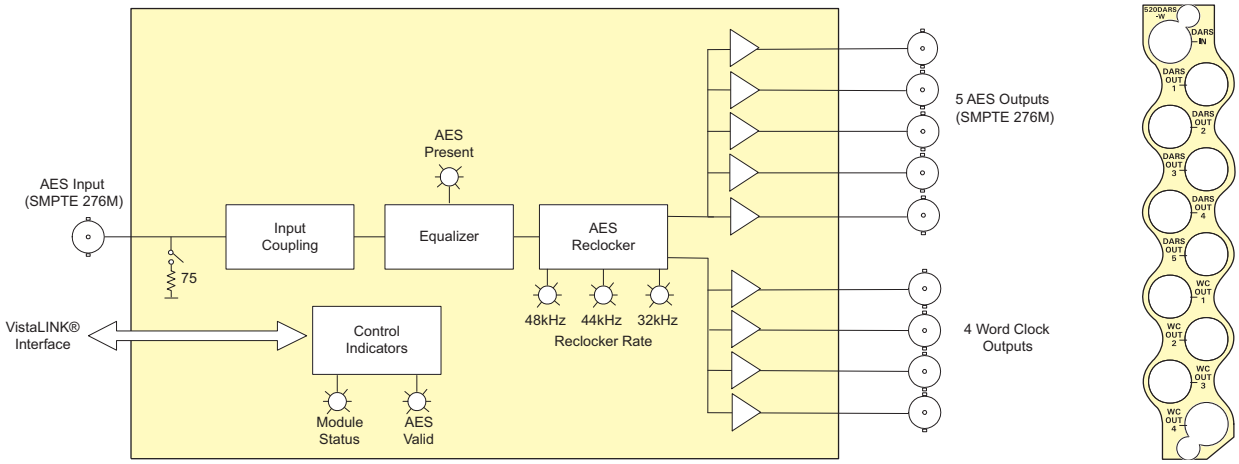

Specifications

AES Input:

Standard:	SMPTE 276M
Number of Inputs:	1
Connector:	BNC per IEC 60169-8 Amendment 2
Input Level:	1V p-p
Coupling:	Transformer
Input Impedance:	75Ω
Return Loss:	> 25dB 100kHz to 6MHz
Equalization:	Automatic to 1500m with Belden 1694A (or equivalent) @ 48kHz AES signal
Sampling Frequency:	32kHz, 44.1kHz, 48kHz and 96kHz

AES Output:

Number of Outputs:	5 Unbalanced AES
Connector:	BNC per IEC 60169-8 Amendment 2
Output Level:	1V p-p
Output Impedance:	75Ω
Return Loss:	> 25dB 100kHz to 6MHz

Word Clock Outputs:

Standard:	AES11-2003
Number of Outputs:	4
Connectors:	BNC per IEC 169-8
Signal Level:	5V p-p square wave (0-5V) ±0.5V

Physical:

Number of Slots:	1

Electrical:

Voltage:	+12V DC
Power:	5W
EMI/RFI:	Complies with FCC Part 15 Class A EU EMC Directive

Ordering Information

520DARS-W	Unbalanced AES Word Clock Extractor Audio Distribution Amplifier

Enclosures	***exponent***
500FR	Compact High Density Distribution Frame
S501FR	Standalone enclosure

The 520DD-AESU is a professional Dolby audio decoder that automatically detects Dolby-E, Dolby Digital (AC3), and PCM streams in the AES input, and translates them to PCM (linear) audio. Up to 8 discrete audio channels may be contained in 1 AES stream when encoded as Dolby-E, yielding up to 4 AES PCM outputs. A fifth stereo pair is obtained as the downmix of the above multi-channel audio. It can be mono, stereo or surround (ProLogic) and may optionally be routed to the output.

So that the multi-channel outputs in PCM form can be re-assembled back into Dolby-E or Dolby Digital further downstream, an additional output with metadata is provided. It contains information about the assumed inter-channel relationships (whether they are 5.1, or 4 stereo pairs, etc.), their expected dialogue levels, etc.

Dolby-E is capable of carrying LTC data embedded within its stream. It can be selected as an output, instead of metadata.

For lipsync cohesion and ease of editing, Dolby-E data is organized in blocks with lengths matching associated video frame. The decoder will match the beginning of each output block with the start of video, as provided with the genlock input. Additional delay can be dialed up by the user, up to 3 seconds. Reference video frame rate must match that assumed by the Dolby-E stream. An extra AES input is provided that can be configured as a backup channel, in the event the primary is lost, or as a voice-over source.

The 520DD-AESU is housed in the 3RU 500FR ***exponent*** frame that will hold up to 16 modules.

Features & Benefits

- Headphone jack with monitoring stereo down-mix
- Secondary AES input with backup contents or voice-over
- Card edge display for Dolby decoder status & audio channel peak levels bargraphs
- Adjustable audio delay up to 3 seconds, independent for all 8 channels
- VistaLINK® capable for remote monitoring via SNMP (using VistaLINK® PRO) when installed in 500FR frame with 500FC VistaLINK® Frame Controller

Inputs
- 1 Unbalanced AES (SMPTE 276M standard version on coax) with Dolby-E, Dolby Digital or PCM (autodetect)
- 1 Unbalanced AES (SMPTE 276M standard version on coax) with voice over PCM
- Video genlock - composite black or tri-level (autodetects) for lip-sync management, Dolby E style

Outputs
- 2 outputs with reshaped AES input
- 4 AES (SMPTE 276M) output with decoded PCM audio
- Metadata or LTC
- Available ProLogic downmix

Card Edge LEDs
- Module status
- AES input health
- Dolby decoder processing status
- Genlock health

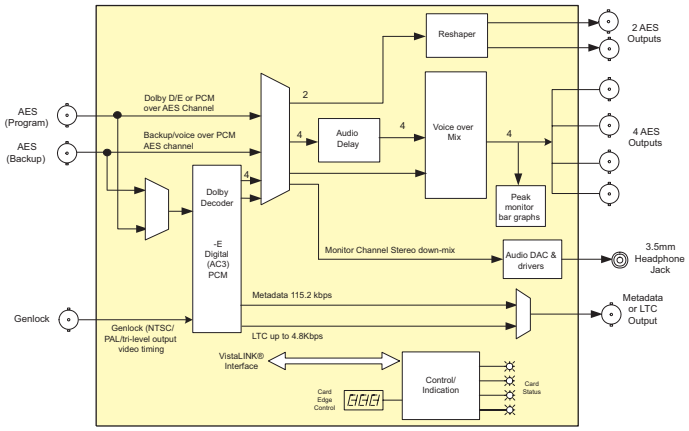

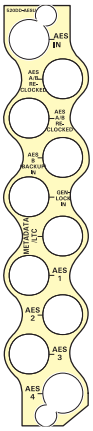

Specifications

AES Audio Input:

Number of Inputs:	2 (program, backup)
Standard:	SMPTE 276M, unbalanced AES
Connectors:	BNC per IEC 60169-8 Amendment 2
Signal Level:	0.1 to 2.5V p-p
Equalization:	Auto > 1000m with 1V p-p drive and Belden 1694A or equivalent coax cable
Resolution:	24 bits
Sample Rate:	48kHz; ±100ppm
Input Impedance:	75Ω
Return Loss:	> 25dB, 100kHz to 6.0MHz

AES Audio Outputs:

Number of Outputs:	6 (2 reclocked & 4 PCM decodes)
Standard:	SMPTE 276M, unbalanced AES
Connectors:	BNC per IEC 60169-8 Amendment 2
Sample Rate:	48kHz
Impedance:	75Ω unbalanced
Return Loss:	> 25dB, 100kHz to 6.0MHz

Genlock Input:

Type:	NTSC or PAL colour black sync (525 line or 625 line) or HD tri-level sync
Connector:	1 BNC per IEC 60169-8 Amendment 2
Impedance:	hi-Z or 75 jumper configurable
Return Loss:	> 40dB to 10MHz

Metadata Output:

Number of Outputs:	1
Type:	Dolby Metadata SMPTE RDD6
Connector:	BNC per IEC 60169-8 Amendment 2 (shared with LTC output as per user selection)
Signal Level:	< ±3V @ 4kΩ load
Output Impedance:	50Ω, DC coupled
Rise Times:	200ns

LTC Output:

Number of Outputs:	1
Standard:	SMPTE 12M
Connector:	BNC per IEC 60169-8 Amendment 2
Signal Level:	Adjustable from 0.5 to 4.0V p-p @ 1kΩ load
Output Impedance:	50Ω
Rise Times:	40µs ±10µs

Headphone Audio Outputs:

Number of Outputs:	1
Type:	Stereo 3.5mm jack
Output Load:	32Ωµ+
Signal Level:	100mW max, soft adjustable over 40dB range
THD+N:	1%
SNR:	90dB RMS, "A" weighted

Electrical:

Voltage:	+12V DC
Power:	6W
EMI/RFI:	Complies with FCC Part 15 Class A EU EMC Directive

Physical:

Number of slots:	1

Ordering Information

520DD-AESU	Dolby E/AC-3 Decoder

Enclosures	***exponent***
500FR	Compact High Density Distribution Frame
S501FR	Standalone enclosure

520AD4-DD-HD

HD/SD Audio De-embedder & Dolby E/AC-3 Decoder & Re-embedder

The 520AD4-DD-HD Audio De-embedder & Dolby® Decoder & Re-embedder extracts embedded audio from 2 specified groups as defined by SMPTE 299M from a 1.5Gb/s serial HD or as defined by SMPTE 272M from a 270Mb/s serial SD video signal.

One selected channel is processed by the on-card Dolby Decoder. If the channel contains Dolby E or Dolby Digital (AC3), it will yield up to 8 additional discrete audio channels and the associated Dolby E metadata. Up to 8 selected channels may be optionally delayed up to 3 seconds and re-embedded into the output video and/or directed to 4 AES outputs. Video output may be optionally delayed up to 7 frames to help with lip sync. If PCM audio is embedded, the device acts as a simple 2 group audio de-embedder.

This device also handles the Dolby E Metadata. Metadata is optionally embedded in VANC and can be provided as an output for downstream devices (i.e. Dolby Encoders, Multichannel Audio Tool, etc.). Dolby-E is capable of carrying LTC data embedded within its stream. It can be selected as an output, instead of metadata.

For lip sync cohesion and ease of editing, Dolby-E data is organized in blocks with lengths matching the associated video frame. The decoder will match the beginning of each output block with the start of video, as provided with the genlock input. Additional delay can be dialed up by the user, up to 3 secs. An extra AES input is provided that can be configured as a backup channel, in the event the primary is lost, or as a voice-over source. This input can be re-configured as a metadata input which can be embedded in VANC, instead of the metadata coming from Dolby Decoder.

VistaLINK® enables control and configuration capabilities via Simple Network Management Protocol (SNMP). This offers the flexibility to manage the module status monitoring and configuration from SNMP enabled control systems such as Evertz VistaLINK® PRO locally or remotely.

The 520AD4-DD-HD is housed in the 3RU 500FR ***exponent*** frame that will hold up to 16 modules.

Features & Benefits

- Automatic switchover to backup audio source on loss of selected Dolby stream
- Adjustable video delay to match Dolby decoder audio delay (up to 7 frames)
- Headphone jack with monitoring stereo down-mix
- Dolby Metadata is embedded in HD VANC for downstream device decoding (refer to 520AD4-HD brochure)
- Secondary AES input with backup, voice-over or Dolby E/AC3 content
- Card edge display for Dolby decoder status & audio channel peak levels bargraphs
- Flexible audio channel router
- VistaLINK® capable for remote monitoring via SNMP (using VistaLINK® PRO) when installed in 500FR frame with 500FC VistaLINK® Frame Controller

Inputs
- Program output bypass relay protected
- SMPTE 292M - (1.5Gb/s serial digital), or SMPTE 259M
- Genlock NTSC-M, PAL-B, any tri-level
- AES input for backup/voice-over source
- Metadata input

Outputs
- 2 processed HD outputs (1 protected with bypass relay)
- 4 AES de-embedded and processed outputs
- 1 BNC configurable as LTC or Dolby metadata (RS422/485)

Controls
- Audio group selection
- Audio channel selection

Card Edge LEDs
- Module Status
- Video Signal presence
- Selected audio group presence/errors
- Dolby decoder processing status
- Genlock health/compatibility
- AES signal presence

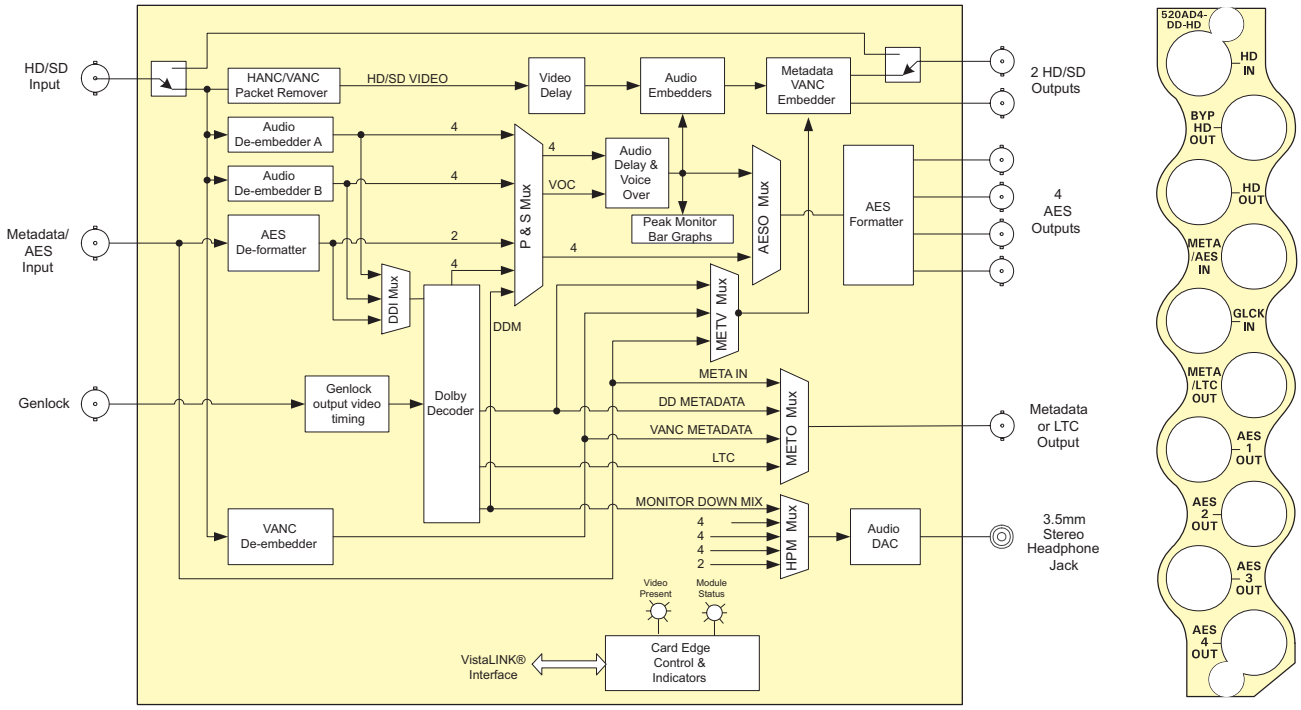

Specifications

Serial Video Input:

Standard:	SMPTE 292M, 1080i/60, 1080i/59.94, 1080i/50, 1080p/30 (sF), 1080p/29.97 (sF), 1080p/25 (sF), 1080/24 (sF), 1080/23.98 (sF), 720p/60, 720p/59.94, 1035i/60, 1035i/59.94 SMPTE 259M-C (270Mb/s) 525 or 625 line component
Connector:	BNC per IEC 60169-8 Amendment 2
Equalization:	Automatic 100m @ 1.5Gb/s with Belden 1694A (or equivalent), 25m with bypass relay active

Processed Serial Video Output:

Standard:	Same as input
Number of Outputs:	2
Connector:	BNC per IEC 60169-8 Amendment 2
Signal Level:	800mV nominal
DC Offset:	0V ±0.5V
Rise and Fall Time:	Per standard
Overshoot:	< 10% of amplitude
Wide Band Jitter:	< 0.2 UI
Metadata:	Embedded according to SMPTE RP2020

Metadata Input/Output:

Type:	Dolby E Metadata SMPTE RDD6
Connector:	*2 BNC per IEC 60169-8 Amendment 2 (*BNC to DB9 dongles are provided)
Baud Rate:	115,200 baud

AES Audio Input:

Standard:	SMPTE 276M
Number of Inputs:	1
Connector:	BNC per IEC 60169-8 Amendment 2
Input Level:	0.1 to 2.5V p-p (5V p-p tolerant)
Input Impedance:	75Ω
Return Loss:	> 25dB 100kHz to 6MHz
Equalization:	Automatic to 1000m with Belden 1694A (or equivalent) @ 48kHz AES signal
Sample Rate:	48kHz ±100ppm

AES Audio Output:

Standard:	SMPTE 276M, single ended AES
Number of Outputs:	4
Connector:	BNC per IEC 60169-8 Amendment 2
Sample Rate:	48kHz
Impedance:	75Ω
Resolution:	Up to 24-bit

Genlock Input:

Type:	NTSC, PAL, black or any tri-level, all autodetect
Connector:	1 BNC per IEC 60169-8 Amendment 2
Impedance:	hi-Z or 75Ω (jumper configurable)
Return Loss:	> 40dB to 10MHz

System Performance:

AC3 Decode Delay:	32ms nominal
Dolby E Decode Delay:	1 frame nominal
De-embedding Latency:	600µs nominal
Additional Audio Delay:	0 to 3 seconds (user programmable)
Additional Video Delay:	0 to 7 frames (user programmable)

Electrical:

Voltage:	+12V DC
Power:	10W
EMI/RFI:	Complies with FCC Part 15 Class A, EU EMC Directive

Physical:

Number of Slots:	1

Ordering Information

520AD4-DD-HD	HD/SD Audio De-embedder & Dolby-E/AC-3 Decoder & Re-embedder

Enclosures	***exponent***
500FR	Compact High Density Distribution Frame
S501FR	Standalone enclosure

520AD4-HD

HD/SD-SDI Audio De-embedder with 4 Unbalanced AES Outputs

The 520AD4-HD Audio De-embedder extracts embedded audio from 2 specified groups as defined by SMPTE 299M from a 1.5Gb/s video HD signal or, as defined by SMPTE 272M from a 270Mb/s SD video signal.

Up to 8 selected channels may be delayed up to 3 sec and re-embedded onto the output video and/or directed to 4 unbalanced AES outputs. An extra AES input is provided as a backup channel, in case of the loss of primary, or as the source of voice-over. The video output may also be delayed up to 5 frames to achieve lip sync with the audio.

The 520AD4-HD also embeds Dolby E Metadata in VANC. The module has multiple sources for this metadata including incoming VANC, and externally supplied metadata. The decoded or de-embedded Dolby E Metadata can be provided as an output for downstream devices (i.e. Dolby E Encoders etc.).

VistaLINK® enables control and configuration capabilities via Simple Network Management Protocol (SNMP). This offers the flexibility to manage the module status monitoring and configuration from SNMP enabled control systems such as Evertz VistaLINK® PRO locally or remotely.

The 520AD4-HD is housed in the 3RU 500FR ***exponent*** frame that will hold up to 16 modules.

Features & Benefits

- Supports SMPTE 292M (1.5Gb/s) or SMPTE 259M (270Mb/s) serial digital video signals
- Video input relay bypass for power failure bypass protection.
- AES input for backup/voice-over source
- 2 processed video outputs
- 4 AES de-embedded and processed outputs
- 1 Dolby Metadata output (RS422/485)
- De-embeds and re-embeds 2 audio groups - user-selectable
- Selectable audio sources for AES and embedded outputs
- Adjustable video (up to 7 frames) and audio delay (up to 3 seconds) to achieve lip sync at output
- Headphone jack with monitoring stereo down-mix
- Card edge LEDs for module status, Video and Audio present
- Card edge display for card status & audio channel peak levels bar graphs
- Configurable Dolby® Metadata input and output
- VistaLINK® enabled for remote monitoring via SNMP (using VistaLINK® PRO) when installed in 500FR frame with 500FC VistaLINK® Frame Controller

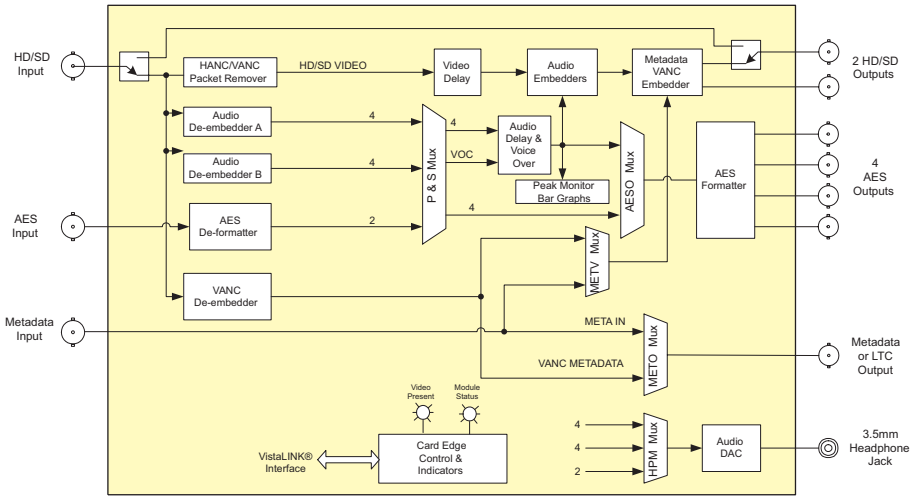

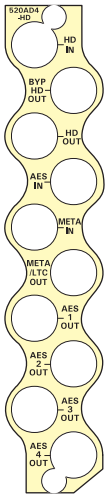

Specifications

Serial Video Input:

Standard:	SMPTE 292M, 1080i/60, 1080i/59.94, 1080i/50, 1080p/30 (sF), 1080p/29.97 (sF), 1080p/25 (sF), 1080/24 (sF), 1080/23.98 (sF), 720p/50, 720p/60, 720p/59.94, 1035i/60, 1035i/59.94 SMPTE 259M-C (270Mb/s) 525 or 625 line component
Number of Inputs:	1
Connector:	BNC per IEC 60169-8 Amendment 2
Equalization:	Automatic > 200m @ 270Mb/s with Belden 8281 (or equivalent), 25m with bypass relay installed

Processed Serial Video Output:

Standard:	Same as input
Number of Outputs:	2
Connector:	BNC per IEC 60169-8 Amendment 2
Signal Level:	800mV nominal
DC Offset:	0V ±0.5V
Rise and Fall Time:	Per standard
Overshoot:	< 10% of amplitude
Wide Band Jitter:	< 0.2 UI
Metadata:	SMPTE RP2020

AES Input:

Standard:	SMPTE 276M
Number of Inputs:	1
Connector:	BNC per IEC 60169-8 Amendment 2
Input Level:	0.1 to 2.5V p-p
Input Impedance:	75Ω
Return Loss:	> 25dB 100kHz to 6MHz
Equalization:	Automatic to 1000m with Belden 1694A (or equivalent) @ 48kHz AES signal
Sample Rate:	48kHz ±100ppm

AES Audio Output:

Standard:	SMPTE 276M, single ended AES
Number of Outputs:	4
Connector:	BNC per IEC 60169-8 Amendment 2
Sample Rate:	48kHz
Impedance:	75Ω
Resolution:	Up to 24-bit

Metadata Input:

Type:	Dolby E Metadata SMPTE RDD6
Connector:	1 BNC per IEC 60169-8 Amendment 2
Baud Rate:	115,200 baud

System Performance:

Embedding Latency:	600µs nominal
Audio Delay Range:	0 to 3 seconds

Electrical:

Voltage:	+12V DC
Power:	10W
EMI/RFI:	Complies with FCC Part 15 Class A, EU EMC Directive

Physical:

Number of Slots:	1

Ordering Information

520AD4-HD	HD/SD-SDI Audio De-embedder with 4 Unbalanced AES Outputs

Enclosures	***exponent***
500FR	Compact High Density Distribution Frame
S501FR	Standalone enclosure

The 520AE4-HD Audio Embedder embeds 4 AES into 2 specified groups as defined by SMPTE 299M in a 1.5Gb/s serial HDTV or as defined by SMPTE 272M in a 270Mb/s serial SDTV video signal.

Several optional processing steps can be applied to the input audio before it is embedded. If needed, the 4 stereo AES input channels can be processed by 4 on-board sample rate converters (SRCs). The SRCs can be configured to automatically respect Dolby E & Dolby Digital adding to ease of use & flexibility. The 8 discrete audio channels can be re-arranged in any arbitrary manner with on-board 8x8 router. The audio channels may be optionally and independently delayed up to 3 seconds.

This device also handles the Dolby E Metadata. Metadata is optionally embedded in VANC for downstream devices according to SMPTE RP2020.

The 520AD4-HD is housed in the 3RU 500FR ***exponent*** frame that will hold up to 16 modules.

Features & Benefits

- Fast locking AES receivers
- Configurable or automatic SRCs on AES inputs
- Headphone jack with monitoring stereo channel
- Card edge display for status & audio channel peak levels bargraphs
- Audio channel router (8x8)
- VistaLINK® capable for remote monitoring via SNMP (using VistaLINK® PRO) when installed in 500FR frame with 500FC VistaLINK® Frame Controller

Inputs
- SMPTE 292M - (1.5Gb/s), or SMPTE 259M - (270Mb/s)
- 4 Channel AES (unbalanced)
- 1 BNC for Dolby metadata (RS422/485)

Outputs
- 4 processed HD outputs
- Program output bypass relay protected

Controls
- Audio group selection
- Audio channel selection

Card Edge LEDs
- Module Status
- Video Signal presence
- AES input presence/errors

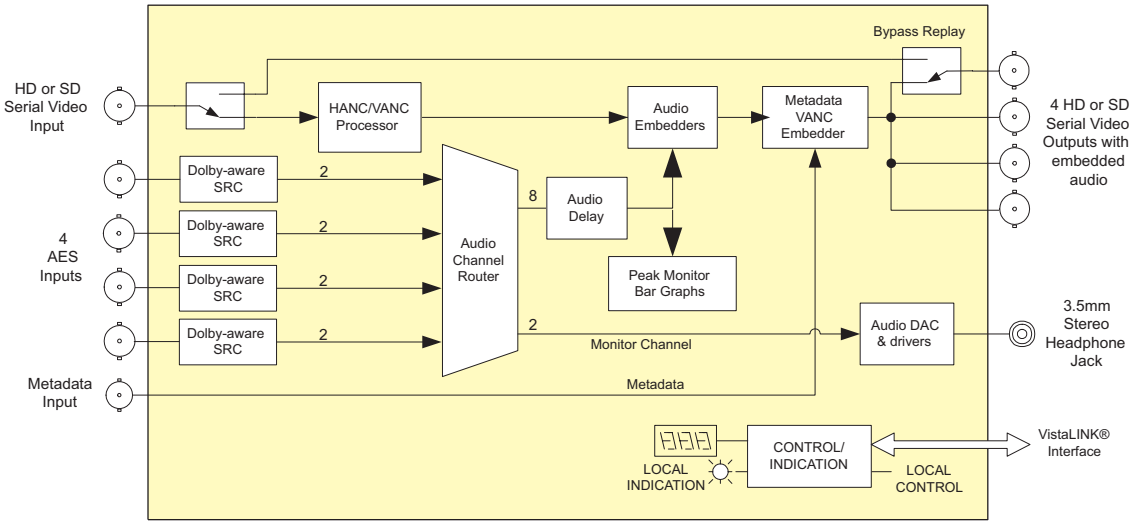

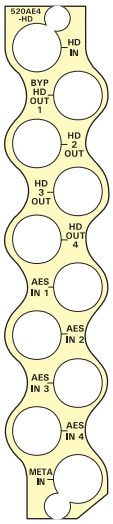

Specifications

Serial Video Input:

Standard:	SMPTE 292M, 1080i/60, 1080i/59.94, 1080i/50, 1080p/30 (sF), 1080p/29.97 (sF), 1080p/25 (sF), 1080/24 (sF), 1080/23.98 (sF), 720p/50, 720p/60, 720p/59.94, 1035i/60, 1035i/59.94 SMPTE 259M-C (270Mb/s) 525 or 625 line component
Connector:	BNC per IEC 60169-8 Amendment 2
Equalization:	Automatic 100m @ 1.5Gb/s with Belden 1694A (or equivalent), 25m with bypass relay installed

Processed Serial Video Output:

Standard:	Same as input
Number of Outputs:	4
Connector:	BNC per IEC 60169-8 Amendment 2
Embedded Audio:	SMPTE 272M or 292M
Embedded	SMPTE RP2020
Signal Level:	800mV nominal
DC Offset:	0V ±0.5V
Rise and Fall Time:	Per standard
Overshoot:	< 10% of amplitude
Wide Band Jitter:	< 0.2 UI

AES Input:

Standard:	SMPTE 276M
Number of Inputs:	4
Connector:	BNC per IEC 60169-8 Amendment 2
Input Level:	0.1 to 2.5V p-p
Input Impedance:	75Ω
Return Loss:	> 25dB 100kHz to 6MHz
Equalization:	Automatic to 1000m with Belden 1694A (or equivalent) @ 48kHz AES signal
Sample Rate:	48kHz ±100ppm

Metadata Input:

Type:	Dolby E Metadata SMPTE RDD6
Connector:	1 BNC per IEC 60169-8 Amendment 2
Baud Rate:	115,200 baud

System Performance:

Embedding Latency:	600µs nominal
Audio Delay Range:	0 to 3 seconds

Electrical:

Voltage:	+12V DC
Power:	10W
EMI/RFI:	Complies with FCC Part 15 Class A, EU EMC Directive

Physical:

Number of Slots:	1

Ordering Information

520AE4-HD	HD/SD Audio Embedder with 4 unbalanced AES inputs

Enclosures	***exponent***
500FR	Compact High Density Distribution Frame
S501FR	Standalone enclosure

520AD8-HD

HD/SD Audio De-embedder with 8 Unbalanced AES Outputs

The 520AD8-HD Audio De-embedder extracts embedded audio from all 4 groups as defined by SMPTE 299M from a 1.5Gb/s serial HD or as defined by SMPTE 272M from a 270Mb/s serial SD video signal. Up to 16 selected channels may be de-embedded and directed to 8 AES outputs.

This device also handles the Dolby E Metadata. Metadata is optionally de-embedded from VANC and can be provided as an output for downstream devices (i.e. Dolby E or Dolby AC3 Encoders etc.).

VistaLINK® enables control and configuration capabilities via Simple Network Management Protocol (SNMP). This offers the flexibility to manage the module status monitoring and configuration from SNMP enabled control systems such as Evertz VistaLINK® PRO locally or remotely.

The 520AD8-HD is housed in the 3RU 500FR ***exponent*** frame that will hold up to 16 modules.

Features & Benefits

- Flexible de-embedded audio channels router (16x16)
- Headphone jack with monitoring stereo channel
- Card edge display for status & audio channel peak levels bargraphs
- VANC decode and output of Dolby Metadata
- VistaLINK® capable for remote monitoring via SNMP (using VistaLINK® PRO) when installed in 500FR frame with 500FC VistaLINK® Frame Controller

Inputs
- SMPTE 292M (1.5Gb/s serial digital), or SMPTE 259M

Outputs
- 1 BNC Dolby Metadata output (RS422/485)
- 8 AES de-embedded outputs

Controls
- Audio channel routing selection

Card Edge LEDs
- Module Status
- Video Signal presence
- Audio group presence/errors

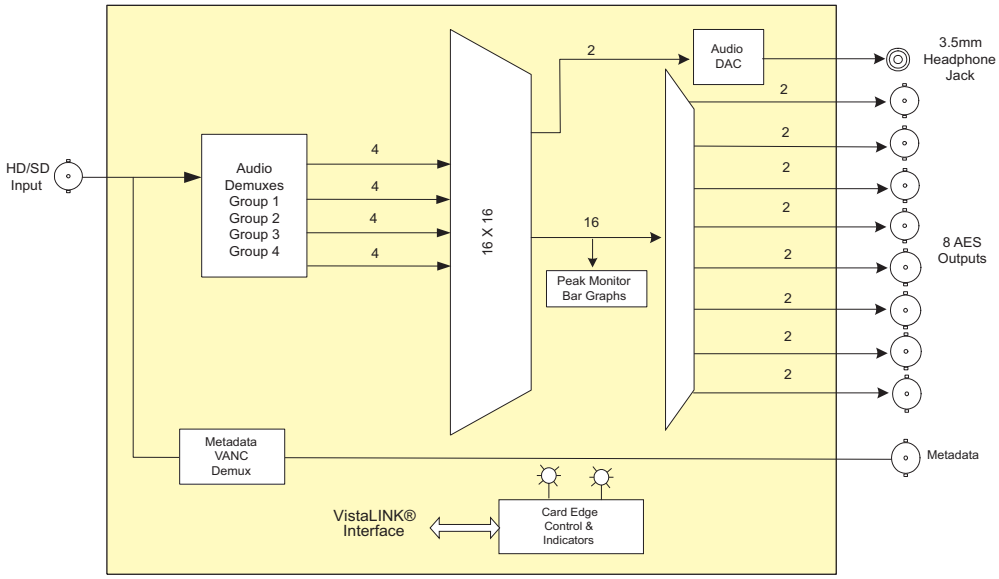

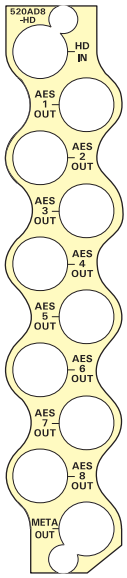

Specifications

Serial Video Input:

Standard:	SMPTE 292M, (1080i/60, 1080i/59.94, 1080i/50, 1080p/30 (sF), 1080p/29.97 (sF), 1080p/25 (sF), 1080/24 (sF), 1080/23.98 (sF), 720p/23.98, 720p/24, 720p/50, 720p/60, 720p/59.94, 1035i/60, 1035i/59.94 SMPTE 259M-C (270Mb/s) 525 or 625 line component
Connector:	BNC per IEC 60169-8 Amendment 2
Equalization:	Automatic 100m @ 1.5Gb/s with Belden 1694 (or equivalent)
Metadata:	SMPTE RP2020

Metadata Output:

Type:	Dolby E Metadata SMPTE RDD6
Connector:	*1 BNC per IEC 60169-8 Amendment 2 (*BNC to DB9 dongles are provided)
Baud Rate:	115,200 baud

AES Audio Output:

Standard:	SMPTE 276M, single ended AES
Number of Outputs:	8
Connector:	BNC per IEC 60169-8 Amendment 2
Sample Rate:	48kHz
Impedance:	75Ω
Resolution:	Up to 24-bit

System Performance:

De-embedding

Latency:	600µs nominal (SD) 200µs nominal (HD)

Electrical:

Voltage:	+12V DC
Power:	10W
EMI/RFI:	Complies with FCC Part 15 Class A, EU EMC Directive

Physical:

Number of Slots:	1

Ordering Information

520AD8-HD	HD/SD Audio De-embedder with 8 unbalanced AES outputs

Enclosures	***exponent***
500FR	Compact High Density Distribution Frame
S501FR	Standalone enclosure

520AE8-HD

HD/SD Audio Embedder with 8 Unbalanced AES Inputs

The 520AE8-HD Embedder embeds 8 AES input signals (16 channels) as 4 groups into a 1.5Gb/s HD video signal (as specified in SMPTE 299M) or into a 270Mb/s serial SD video signal (as defined by SMPTE 272M).

Several optional processing steps can be applied to the input audio before it is embedded. If needed, the 8 AES input signals can be processed by 8 on board sample-rate converters (SRCs). This processing will automatically detect Dolby E /AC3 inputs and bypass the SRCs to maintain the integrity of the non-PCM audio data. Also, audio channels can be independently rearranged (using on-board 16x16 router) in any desired way before embedding.

The 520AE8-HD module also handles Dolby E Metadata. The module can optionally embed Metadata in the vertical ancillary data space (VANC) of HD/SD signals for downstream devices according to SMPTE RP2020.

The 520AD8-HD is housed in the 3RU 500FR ***exponent*** frame that will hold up to 16 modules.

Features & Benefits

- Fast locking AES receivers
- Headphone jack with monitoring stereo channel
- Card edge display for status & audio channel peak levels bargraphs
- Dolby-aware SRC (sample rate converters)
- Flexible audio channel router (16x16)
- VistaLINK® capable for remote monitoring via SNMP (using VistaLINK® PRO) when installed in 500FR frame with 500FC VistaLINK® Frame Controller

Inputs
- SMPTE 292M (1.5Gb/s serial digital), or SMPTE 259M
- 8 Channel AES (unbalanced)
- Dolby metadata (RS422/485)

Outputs
- Program output bypass relay protected
- 1 processed HD output

Controls
- Audio channel selection
- Embedded group enable/disable

Card Edge LEDs
- Module Status
- Video Signal presence
- AES input presence/errors

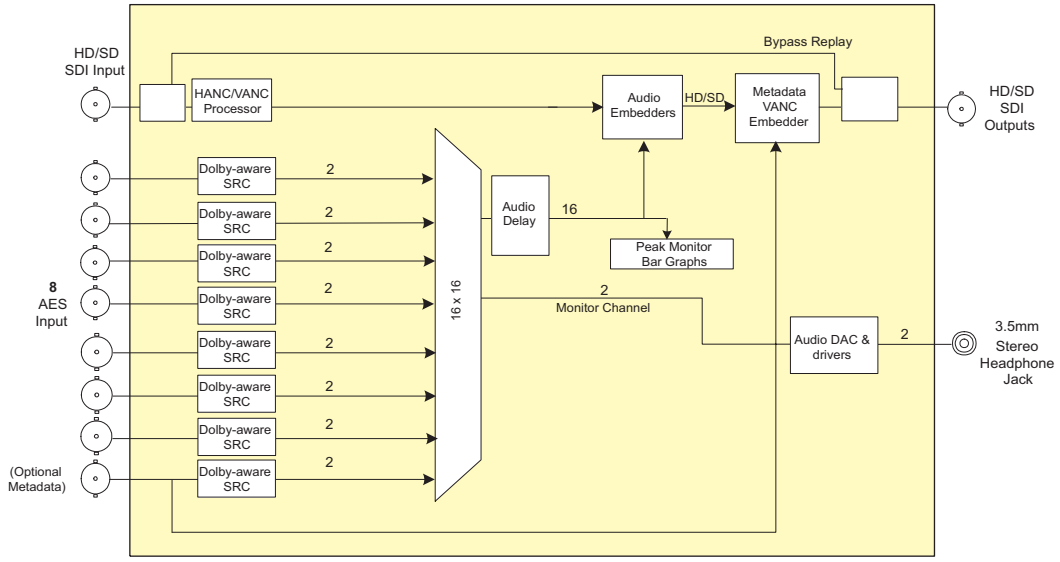

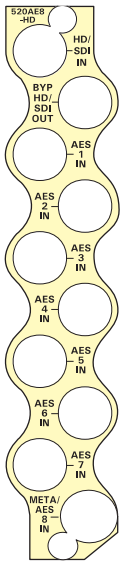

Specifications

Serial Video Input:

Standard:	SMPTE 292M, (1080i/60, 1080i/59.94, 1080i/50, 1080p/30 (sF), 1080p/29.97 (sF), 1080p/25 (sF), 1080/24 (sF), 1080/23.98 (sF), 720p/23.98, 720p/24, 720p/50, 720p/60, 720p/59.94, 1035i/60, 1035i/59.94 SMPTE 259M-C (270Mb/s) 525 or 625 line component
Connector:	BNC per IEC 60169-8 Amendment 2
Equalization:	Automatic 100m @ 1.5Gb/s with Belden 1694A (or equivalent), 25m when bypass relay engaged

Processed Serial Video Output:

Standard:	Same as input or user controlled
Number of Outputs:	1
Connector:	BNC per IEC 60169-8 Amendment 2
Signal Level:	800mV nominal
DC Offset:	0V ±0.5V
Rise and Fall Time:	Per standard
Overshoot:	< 10% of amplitude
Wide Band Jitter:	< 0.2 UI

AES Input:

Standard:	SMPTE 276M
Number of Inputs:	8
Connector:	BNC per IEC 60169-8 Amendment 2
Input Level:	0.1 to 2.5V p-p
Input Impedance:	75Ω
Return Loss:	> 25dB 100kHz to 6MHz
Equalization:	Automatic to 1000m with Belden 1694A (or equivalent) @ 48kHz AES signal
Sample Rate:	48kHz ±100ppm

Metadata Input:

Type:	Dolby E Metadata SMPTE RDD6
Connector:	1 BNC per IEC 60169-8 Amendment 2 (adapter to DB9 available)
Baud Rate:	115,200 baud

System Performance:

Embedding Latency:	600µs nominal 3ms (with SRC), 0.2ms (SRC off)

Electrical:

Voltage:	+12V DC
Power:	10W
EMI/RFI:	Complies with FCC Part 15 Class A, EU EMC Directive

Physical:

Number of Slots:	1

Ordering Information

520AE8-HD	HD/SD Audio Embedder with 8 unbalanced AES inputs

Enclosures	***exponent***
500FR	Compact High Density Distribution Frame
S501FR	Standalone enclosure

EQX - 576x576 & 288x288

High Density Core Router

The only routing solution for mission critical applications
The EQX platform is Evertz's flagship routing and distribution solution designed for high availability by adopting extensive redundancy for all critical system elements. With this, and the ability to route up to 576x576 signals in a compact 26RU frame or up to 288x288 in the 16RU frame, the EQX is ideal for mission critical and demanding 24/7 environments including network, local broadcaster, mobile production, cable, military, government and corporate applications.

Designed for performance
Ultra Wide Band Routing
By offering a format independent data path the EQX supports signals from 3 Mb/s all the way up to 3Gb/s including SD-SDI, HD-SDI, DVB-ASI, SMPTE310 digital video formats, amongst others. In addition to this the EQX supports four independent timing planes which provides independent SMPTE compliant switching for up to four different digital video signal formats.

Intelligent auto-configuration
The EQX's exceptional Source-By-Source intelligent auto configuration facility allows the path to each destination to be independently and instantly re-configured to suit the requirements of the source being switched. This includes auto selecting the Reclocking/Non-reclocking circuitry, the ASI mode as well as selecting the correct switch point.

System Flexibility
The inspired modular approach of the EQX's design provides excellent in-service expansion capabilities. In convenient steps of 18 the number of inputs and/or outputs can be increased from the base size of 18x18 all the way up to 576x576, and beyond, in square and non-square configurations.

Compact Design
The EQX platform is Evertz's flagship routing and distribution solution designed for high availability by adopting extensive redundancy for all critical system elements. With this, and the ability to route up to 576x576 signals in a compact 26RU frame or up to 288x288 in the 16RU frame, the EQX is ideal for mission critical and demanding 24/7 environments including network, local broadcaster, mobile production, cable, military, government and corporate applications.

Comprehensive Control
The EQX provides a comprehensive level connectivity to suit the most demanding installations. Its' internal frame controllers provide complete connectivity, to any number of remote control panels and 3rd party control devices such as automation systems via multiple Q-Link, F-Link, Ethernet and Serial ports.

Independent Monitoring
EQX provides extensive signal monitoring of both inputs and outputs, power supply voltages, interior temperatures and fan speeds. All monitored data is available through SNMP for facility-wide monitoring systems such as VLPRO.

Simple Maintenance
The advanced design of the EQX ensures that all active components, including input, output, crosspoint modules, frame controllers, cooling fans and power supplies, are accessible from the front of the frame and can be hot swapped at any time for maintenance.

Outstanding Redundant Protection
The EQX is the ultimate design in terms of system availability. The EQX architecture contains redundant protection for all of the critical system elements. The architecture provides redundant crosspoint configurations, redundant frame controllers, external redundant load sharing power supplies, redundant easy access cooling fans and a dedicated monitoring bus that is independent of the system crosspoints. In the event of a failure, manual or automatic re-routing of signals on an output-by-output basis is fully supported by the system software. Using the EQX monitoring capabilities, output quality can be verified prior to switching to redundant signal paths. The EQX is fully SNMP enabled and supports seamless integration with VistaLINK® PRO command and control systems.

Features & Benefits

High performance format independent platform
- SD-SDI, HD-SDI, DVB-ASI, SMPTE 310M and more!
- Scalable to 576x576 in a single 26RU frame
- Scalable to 288x288 in a single 16RU frame
- Input expansion in steps of 18
- Output expansion in steps of 18
- Up to 1152x1152 in multiple frames
- Source-by-source intelligent auto configuration
- Input equalization (On/Off)
- Output reclocking (On/Off)
- ASI Mode (On/Off)
- Switch Point (Variable)

High availability, 24/7 design
- Full modular design
- All modules are hot swappable
- Passive I/O
- Full redundant design
- Redundant crosspoint
- Redundant frame controller
- Redundant power supply (seperate IRO)
- Redundant cooling fans
- Comprehensive system monitoring bus
- VistaLINK® PRO SNMP & AVM monitoring of I/O & crosspoint modules
- Temperature monitoring
- Power supply monitoring

Advanced system control & interfacing
- Supports the full range of Quartz remote control panels
- Full VistaLINK® PRO command & control, SNMP & AVM
- Full integration with 3rd party automation systems
- Supports a wide selection of control protocols
- Ethernet, Serial RS422/232, F-Link and Q-Link ports

Specifications

Configuration:

576x576 in 26RU	(PSU separate 1RU)
288x288 in 16RU	(PSU separate 1RU)
Inputs:	Selectable in blocks of 18
Outputs:	Selectable in blocks of 18
Redundant Protection:	Redundant Crosspoint Redundant Frame Controller Redundant Power Supply Redundant Cooling Fans

Video Inputs:

Formats	SMPTE 259M, SMPTE 292M, SMPTE 310M, SMPTE 424M, ASI
Signal Level	800mV p-p
Impedance	75Ω terminating
Return Loss	>15db typical (5-1500 MHz) >10db typical (1.5-3GHz)
Cable Equalization	Belden 1694 @ 270 MHz 300m Belden 1694 @ 1.5GHz 100m
Connectors	BNC

Video Outputs:

Signals Supported	Same as Input
Reclocking	Configurable
Non-Reclocking	Configurable
Signal Level	800mV p-p ± 10%
Impedance	75Ω terminating
Return Loss	>15 db typical (5-1500 MHz) >10db typical (1.5-3GHz)
DC Offset	0 ± 0.5V
Output Jitter	0.2 UI
Connectors	BNC

Reference Timing:

Switching Reference:	Analog 525/625/tri-level HD Looping connections
Connector:	2 BNC
Signal Level:	1 V p-p ± 3dB
Impedance:	75Ω terminating active loop out optional
Reference Timing:	4 independent timing planes, programmable output by output

Control:

Q-Link:	4x 75Ω video cable (max length 500m)
F-Link:	2x RJ45
Serial RS422/232:	2x D9 female
Ethernet:	10/100baseT, 2x RJ45

Physical:

Height:	45.5" (115.5cm) 26RU 28" (49cm) 16RU
Width:	19" (483mm) 19" Rack Mount
Depth:	19.4" (493mm) over hinges and BNCs
Operating Temperature:	0°C -40°C
Cooling:	Fan cooled, front to rear

Power:

Voltage:	Auto ranging 100 to 240V 50/60Hz Up to 4 load sharing PS modules in 1RU frame - separate mains input for each module or external 48VDC
Power:	1200 W per PS module 1500 W for fully loaded 288x288 config 3000 W for fully loaded 576x576 config
Redundancy:	Separate 1RU frame with up to 4 PS modules for 1:1 redundancy available

Base Ordering Information

576x576- 26RU Frame:

EQX26-18X18S	18 input, 18 output SDI/ASI Video Router with single power supply
EQX26-18X18H	18 input, 18 output HD/SDI/ASI Video Router with single power supply
EQX26-18x18-3G	18 input, 18 output 3G/HD/SDI/ASI Video Router with single power supply
EQX26-18x36-3G-F	18 input, 36 output 3G/HD/SDI/ASI Video router with Fiber I/O and single power supply

288x288 - 16RU Frame:

EQX16-18X18S	18 input, 18 output SDI/ASI Video Router with single power supply
EQX16-18X18H	18 input, 18 output HD/SDI/ASI Video Router with single power supply
EQX16-18x18-3G	18 input, 18 output 3G/HD/SDI/ASI Video Router with single power supply
EQX16-18x36-3G-F	18 input, 36 output 3G/HD/SDI/ASI Video router with Fiber I/O and single power supply

Ordering Options (to expand 26RU up to 576x576, 16RU up to 288x288):

EQX-PS-FR	1RU frame which holds up to 4 power supply modules (EQX-PS)
EQX-PS	Power Supply module 4 for 26RU frame & 2 for 16RU frame
EQX-FC	Redundant frame controller for 26RU and 16RU frame
EQX-XPT-576x288	Redundant crosspoint module for 26RU frame
EQX-XPT-288x288	Redundant crosspoint module for 16RU frame

Available for either 16RU frame or 26RU frame:

EQX-IP18S	18 Input SDI/ASI Module
EQX-IP18H	18 Input HD/SD/ASI Module
EQX-IP18-3G	18 Input 3G/HD/SD/ASI Module
EQX-OP18S	18 Output SD/ASI Module
EQX-OP18H	18 Output HD/SD/ASI Module
EQX-OP18-3G	18 Output 3G/HD/SD/ASI Module

For fiber optics options contact factory
Greater than 576x576, contact factory

XE4-64x64, XE8-128x128

Xenon Multi-Format Routers

Xenon brings many advanced new capabilities to the world of routing switchers, building on a new generation design that starts with a solid multi-format router core. In today's broadcast environment, a router must be reliable, resilient and cost effective. Xenon excels in all of these areas while offering the flexibility of multiformat operation, and the ability to add Signal Processing Technology.

Great care has been taken in the design of Xenon to avoid single points of failure. Active assemblies are all hot swappable from the front of the frame. Power, control, cooling and reference generation are available in redundant configurations.

Features & Benefits

Configuration
Xenon allows any mix of formats within a frame in independent blocks of 32 inputs or outputs. Any of the supported formats, 3G/HD/SD/AES/Analog audio, can be expanded to fill an entire 128x128 frame.

The Xenon is housed in a 4RU frame, switching up to 64 sources to 64 destinations, or in an 8RU frame switching up to 128 sources to 128 destinations. Additional input and output modules can be installed in to the router at anytime.

Control
The Xenon router includes, as standard, an internal Frame Controller module which supports four Q-Link ports, two F-Link ports, two Ethernet ports and two Serial ports mounted on the rear of the router.

The Xenon has a number of control options, they are:

Remote Control Panel: Any panel(s) from the entire range of Quartz remote control panels can be used with the Xenon router connected via Q-Link.

External third party control: The Xenon router can be remotely controlled via an external third party control device, such as an automation system, when connected to the router's serial port.

Expansion
The input and output stages of the Xenon can be expanded in steps of 32 at any time by adding additional I/O modules. The Xenon can not be expanded beyond its frame size.

Power Supply
The power supplies for the Xenon are internal. The 4RU & 8RU frame can be fitted with an optional redundant power supply with separate AC power inlet & alarm output.

Video
Xenon supports 3G, HD, SD and ASI video routing. It is available as 3G/HD/SD or HD/SD or SD only, offering cost savings for those who do not require 3G and or HD capability. For those applications requiring the signal to be reclocked, reclocking modules can be added in blocks of 8 outputs.

Audio
Xenon supports both AES and Analog Audio routing. Balanced AES or unbalanced AES on BNCs or analog audio are supported in any mixture in blocks of 32 inputs or outputs.

Signal and System Monitoring
Xenon supports SNMP signal monitoring and comprehensive system monitoring, including power supply voltages, interior temperatures and fan speeds. System status may also be monitored remotely by a network based remote connection over TCP/IP or a direct serial connection to a PC. User-configurable closing contacts are also provided for connection to an external alarm system.

Feature Summary
- Multiple signal formats within a single frame
- Optional output reclocking in blocks of 8 outputs
- All outputs can switch in one TV frame
- Dual reference inputs
- Advanced audio features including Soft Switching
- Dolby E signal compatible
- Redundant internal controllers
- No controllers needed for slave frames
- Q-Link, F-Link, Ethernet and RS485 control interfaces
- Deterministic switching
- SNMP and system monitoring
- Powerful and intuitive WinSetup Software

Specifications

Configuration:
Inputs: Selectable in blocks of 32
Outputs: Selectable in blocks of 32

Standard Definition:
SD Video Inputs:
Signals supported: SMPTE 259M 1997, ASI DVB standard
Signal Level: 800mV p-p nominal
Impedance: 75Ω terminating
Return Loss:
5 - 270MHz 15dB typical
Cable equalization: Belden 8281
BBC PSF1/2: 250m min
BBC PSF1/3: 150m min
Connectors: BNC

SD Video Outputs:
Signal Level: 800mV p-p ±10%
Impedance: 75Ω terminating
Return Loss:
5 - 270MHz 15dB typical
DC Offset: 0 ±0.5V
Connectors: BNC

Signal Path:
Rise/fall times: < 0.4ns
Path Length: 12ns, typical
Output jitter: 0.2 UI p-p with < 250m input cable

High Definition:
HD Video Inputs:
Signals supported: SMPTE 292M
Signal Level: 800mV p-p nominal
Impedance: 75Ω terminating
Return Loss:
5 - 1485MHz 15dB typical
Cable equalization: Belden 1694A, 90m
Connectors: BNC

HD Video Outputs:
Signal Level: 800mV p-p ±10%
Impedance: 75Ω terminating
Return Loss:
5 - 1485MHz 15dB typical
DC Offset: 0 ±0.5V
Connectors: BNC

Signal Path:
Rise/fall times: < 0.4ns
Path Length: 12ns, typical
Output jitter: 0.2 UI p-p with < 95m input cable

Audio Inputs - AES:
Balanced version (D50)
Sample rates: 32kHz, 44.1kHz, 48kHz, and 96kHz
Standard: AES3-1992
Signal level: 0.2-7V p-p
Impedance: 110Ω ±20%
Transformer coupled
DC on input: ±50V
Connectors: D50 female carrying 16 signals

Unbalanced Version (BNC):
Standard: SMPTE 276M
Impedance: 75Ω
Return loss: 25dB, 0.1-6.0kHz
Connectors: BNC per IEC 60169-8 Amendment 2

Audio Outputs - AES:
Balanced version (D50)
Signal level: 2-5V p-p
Impedance: 110Ω Transformer coupled
DC isolation: ±50V
Rise/fall time: 3.5-10ns
Connectors: D50 female carrying 16 signals

Unbalanced version (BNC):
Signal level: 1.0V p-p ±50%
Impedance: 75Ω
Return loss: 25dB, 0.1-6.0kHz
Jitter: Conforms to ANSI S4.40 - 1992
Connectors: BNC per IEC 60169-8 Amendment 2

Switching Reference:
Reference inputs (SD):
2x, BNC, analog 525/625
Reference inputs (HD/SD):
Tri level analog 625 or 525
Signal level: 1V p-p ±3dB
Impedance: 75Ω terminating
Line switching: Lines 3/319 (625)
Lines 10/273 (525)
Line 7 (HD)
Connectors: BNC

Electrical:
Supply: Auto ranging 100 to 240V AC 50/60Hz
Power:
8RU: Typical 300VA
Max 500VA
4RU: Typical 150VA
Max 250VA
Not including the SPT modules
Backup: Optional

Physical:
Height:
4RU: 7" (178mm)
8RU: 14" (355mm)
Width: 19" (483mm)
Depth: 17 3/4" (450mm)
Weight:
4RU: 16kg
8RU: 31kg
Operating Temp.: Spec. maintained to 30°C
Operation to 40°C
Ventilation: Fan cooled from the front to the rear of the left hand and right hand side of the router

Control:
Q-Link: 4x75Ω video cable (max length 500m)
F-Link: 2xRJ45
Serial RS422/232: 2xD9 female
Ethernet, 10baseT: 2xRJ45

Compliance:
Safety: Compliant with CSAC22.2 No 60065-03 IEC 60065
Complies with CE low voltage directive 93/68/EEC
EMC: Complies with FCC Part 15, Class A
CE EMC Directive 89/336/EEC

Ordering Information

XE4 Up To 64x64 Base Systems

XE4-3232SX	Xenon 4RU 32x32 SDI Router
XE4-3232HX	Xenon 4RU 32x32 HD/SD Router
XE4-3232-3G	Xenon 4RU 32x32 3G/HD/SD Router
XE4-3232AESB	Xenon 4RU 32x32 Digital Audio Router (Balanced)
XE4-3232AESU	Xenon 4RU 32x32 Digital Audio Router (Unbalanced)
XE4-3232-AA	Xenon 4RU 32x32 Analog Audio Router

XE8 Up To 128X128 Base Systems

XE8-3232SX	Xenon 8RU 32x32 SDI Router
XE8-3232HX	Xenon 8RU 32x32 HD/SD Router
XE8-3232-3G	Xenon 8RU 32x32 3G/HD/SD Router
XE8-3232AESB	Xenon 8RU 32x32 Digital Audio Router (Balanced)
XE8-3232AESU	Xenon 8RU 32x32 Digital Audio Router (Unbalanced)
XE8-3232-AA	Xenon 8RU 32x32 Analog Audio Router

Ordering Options

+2PS	Redundant Power Supply (1 required for 4RU Frame), (2 required for 8RU Frame)
+FU	Redundant Controller Module
+REF	Redundant Reference module (Can only be fitted on frames with 64 or more, outputs)
+R8	Reclocking option for 8 HD/SD outputs
+R16	Reclocking option for 16 HD/SD outputs
+R24	Reclocking option for 24 HD/SD outputs
+R32	Reclocking option for 32 HD/SD outputs
+SS	Synchronous AES Audio
+SRC	Sample Rate Converters for AES audio

Accessories:

XE-IP32SX	32 Standard Definition inputs
XE-IP32HX	32 HD/SD inputs
XE-IP32-3G	32 3G/HD/SD inputs
XE-IP32-AA	32 Analog Audio inputs
XE-IP32-AESB	32 AES Balanced inputs
XE-IP32-AESU	32 AES Unbalanced inputs
XE-OP32-AA	32 Analog Audio outputs
XE-OP32HSX	32 HD/SD outputs
XE-OP32SX	32 Standard Definition inputs
XE-OP32-3G	32 3G/HD/SD outputs
XE-OP32-AESB	32 AES Balanced outputs
XE-OP32-AESU	32 AES Unbalanced ouputs

Q256-SD

SD Video Router

The Q256-S is an advanced large-scale standard definition digital video router that can be expanded up to a matrix size of 256x256. The design of Q256-S includes comprehensive and diagnostic facilities allowing the signal to be monitored at the input as well as the output of the router.

The monitoring output is available externally or can be processed internally to yield EDH status information. In addition there is comprehensive monitoring of the power supplies and cooling fans.

Features & Benefits

Feature Summary

- Automatic cable equalization on each input
- Reclocking outputs with fully automatic sample rate selection
- Comprehensive system & signal monitoring option
- Can be controlled over an Ethernet network
- Redundant controller option
- Module, power supply and fan 'hot-swap' capability
- Vertical interval switching, reverts to free running if no analog sync is detected
- Basic signal presence detectors check each input, each output and the reference inputs
- Signal quality monitoring using EDH checks
- Transaction logging
- Remote monitoring and diagnostics are possible via serial or Ethernet ports
- Power supply voltage and temperature monitoring
- Temperature inside the router is monitored at several points
- Fans are monitored for rotation and rotation speed
- Control ports are monitored for activity
- Status of signal leaving the input modules (optional)
- Status of signal leaving the output modules (optional)

Configuration

The Q256-S is housed in a 16RU frame, switching up to 256 sources to 256 destinations. The modular design of the Q256-S allows additional input and output modules to be installed into the router at any time in blocks of 32.

Control

The Q256-S requires an external control system that operates alongside its internal controller. The external controller can be either the SC-500A or SC-1000. The SC-500A is a simple non-redundant system controller suitable for non-critical installation while the SC-1000 is a comprehensive fully redundant system controller suitable for all critical on-air installations. The SC-1000 should always be used when 100% redundancy protection is required. The System Controller handles the management of the router as well as optionally providing additional redundancy features. It's an expandable platform that supervises all of the communication and interface requirements of the Q256-S router and its control panels.

Remote Control Panel: Any panel(s) from the entire range of Quartz remote control panels can be used with the Q256-S router connected via Q-Link and the System Controller.

External third party control: The Q256-S router can be remotely controlled via an external third party control device, such as an automation system, when connected to the router's serial port. Some automation systems have the ability to connect directly to the Q256-S while others connect via the System controller.

Router Expansion

The Q256-S router can be expanded by installing extra plug-in modules into a part-populated router frame.

The Q256-S router can be scaled in steps of 32 from 32x32 through to 256x256 in a single 16RU frame.

Power Supply

The two power supplies for the Q256-S are internal. The 16RU Q256-S frame can be fitted with an optional redundant power supply configuration with separate AC power inlet and alarm output.

Monitoring and Diagnostics

A major feature of the design is the integral monitoring and diagnostic facilities which allows the signal to be monitored at the inputs and at the outputs of the router. The monitoring output is available externally or can be processed internally to yield EDH status information. In addition there is comprehensive monitoring of the power supplies and cooling fans. The monitoring and diagnostics can be controlled and the resulting data accessed through a serial or Ethernet port.

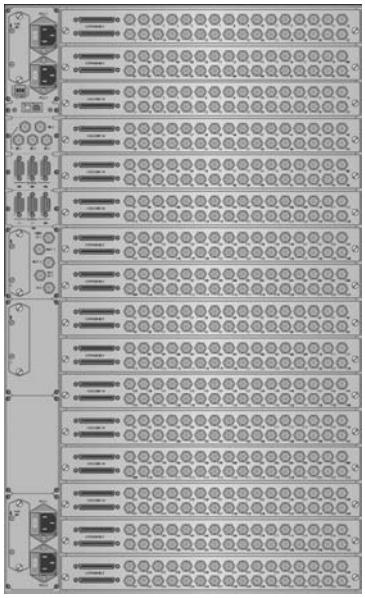

Specifications

Configuration:

Inputs:	Selectable in blocks of 32
Outputs:	Selectable in blocks of 32

Standard Definition Video:

Video Inputs:	
Signals Supported:	SMPTE 259M ASI DVB standard
Signal level:	800mV p-p nominal
Impedance:	75Ω terminating
Return Loss at 5-270Mhz:	18dB typical
Cable equalization at 270Mhz:	
Belden 8281	
BBC PS1/2:	300m min, 350m typical
BBC PS1/3:	100m min, 175m typical
Connectors:	BNC per IEC 60169-8 Amendment 2

Video Outputs:

Signal level:	800mV p-p ±10%
Impedance:	75Ω
Return Loss at 5-270Mhz:	23dB typical

Reclocking Outputs:

DC offset:	0 ±0.5V
Connectors:	BNC per IEC 60169-8-8 Amendment 2

Signal Path:

Rise/fall times:	600 to 900ps
Path length:	45ns, typical
Output jitter:	0.2UI p-p with < 300m input cable

Switching Reference:

Reference input:	2, analog 525 and 625
Signal level:	1V p-p ±3dB or 1-4V pulses
Impedance:	75Ω terminated
Switching Line :	6/319 (625) 10/273 (525) complies with SMPTE RP-168

Control:

Q-Link to remote panels:	
	4x (75Ω video cable) 500m max. length
Serial RS232/422:	3x (D9 female)
Ethernet:	2x (RJ45)

Power:

Supply:	Auto ranging 100 to 240V AC 50/60Hz
Power:	1600W
Backup:	Optional with alarm output

Physical:

Height:	16RU 28" (719mm)
Width:	19" Rack mount (483mm)
Depth:	20.75" (515mm)
Weight:	220lbs (100kg)
Operating temp:	0-40°C ambient
Ventilation:	Fan cooled right to left

Ordering Information

Q256-032032S	16RU 32x32 Serial Video Router with reclocking outputs

Ordering Options

+2PS	Redundant power supplies (2)
Q256-IP32S	32 Standard Definition Inputs
Q256-OP32S	32 SD Ouptuts (non-reclocking)
+FU	Redundant controller module (required for redundant operation)
+SM	System Monitor Module

The Q6400-N router is a mid-sized analog video router

Features & Benefits

Configuration
The Q6400-N is housed in a 3RU frame. It is available in three fixed sizes - 32x32, 64x32 and 64x64. It can be upgraded by returning the router to the local service center.

Control
The Q6400-N router includes, as standard, an internal FU-0003 Controller module which supports a single Q-Link and Serial port on the rear of the router. An optional internal CI module can be fitted to increase the number of Q-Link and Serial ports.

The Q6400-N has a number of control options, they are:

Passive Remote Control Panels: The CP-1601A-P and CP-1604-P passive remote control panels can be fitted to the Q6400-N via a PI-1604 or PI-1608 parallel interface.

Remote Control Panel: Any panel(s) from the entire range of Quartz remote control panels can be used with the Q6400-N router connected via Q-Link.

External Third Party Control: The Q6400-N router can be remotely controlled via an external third party control device, such as an automation system, when connected to the router's serial port.

Expansion
The input or output stage of the Q6400-N can be expanded from 16 to 32. In both cases the router needs to be returned to the local service centre to be upgraded. It can not be expanded beyond its frame size.

Power Supply
The power supply for the Q6400-N is internal. An optional redundant power supply with separate AC power inlet and alarm output is available.

Analog Video
- 50Mhz bandwidth and terminated inputs for best possible signal performance
- DC restored inputs for composite signals ensures switching free from the picture disturbances often encountered in DC coupled only designs
- Vertical interval switching for clean switching, reverts to free running if no sync reference (video or pulse) with all levels of the same route switching in the same field
- Dual 525/625 reference input

Operational Features
- Frames can be stacked for parallel component analog video routers, or a single frame can be split to provide separate routers from a single frame
- Diagnostic monitoring of temperature and PSU status
- All modules are installed from the front for easy access for upgrades and maintenance, not possible with some alternative designs
- Built-in control system

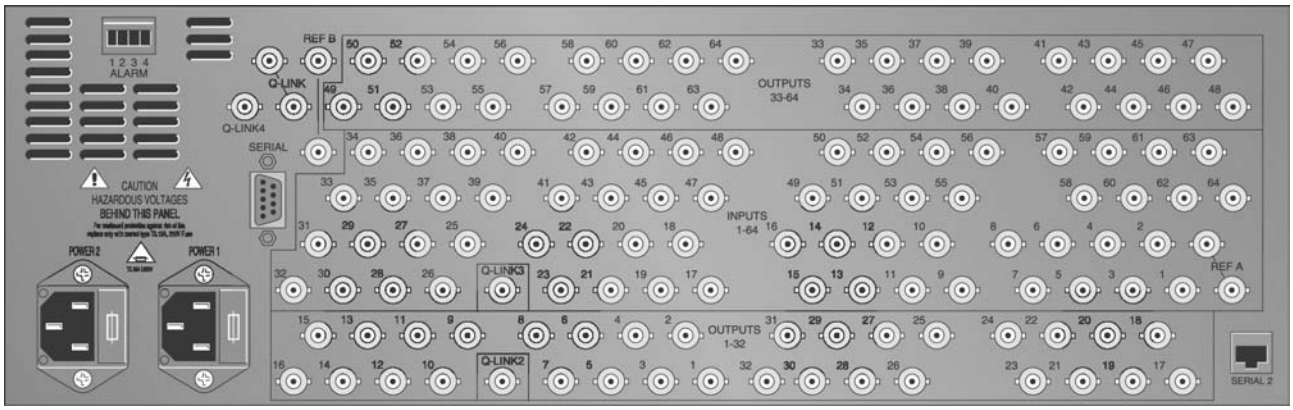

Specifications

Configuration:
Inputs Selectable: 32 or 64
Outputs Selectable: 32 or 64

Analog Video Inputs:
Signal level: 1V p-p nominal, +3dB max.
Impedance: 75Ω terminating
Return Loss to 5.5MHz: 39dB
Connectors: BNC per IEC 60169-8 Amendment 2

Analog Video Outputs:
Impedance: 75Ω
Return Loss to 5.5MHz: 38dB
DC on output: ±50mV
Connectors: BNC per IEC 60169-8 Amendment 2

Signal Path:
Insertion gain: ±0.1dB
HF response: 15kHz to 5.5MHz ±0.1dB to 20MHz
±0.2dB -3dB bandwidth > 50MHz
LF response, tilt at 50Hz: 0.5%
2T pulse, pulse/bar, bar slope: 0.25%
Luma/Chroma Inequalities: ±0.5% gain, ±5ns delay
Diff Gain and Phase: 0.15%, 0.15° (10-90% APL)
Luminance non-linearity: 0.2%
Path length, typical: 10ns
Timing spread at 3.58/4.43MHz: ±2° at any output
Crosstalk at 3.58/4.43MHz: -63dB
Noise to 5.5MHz: -68dB rms.

Control:
Q-link to remote panels: 1 as standard (additional 3 Q-links with CI-0004 option) 75Ω video cable 500m max. length
Serial RS232/422: 1 as standard (additional port with CI-0001 or CI-0004 option)

Switching Reference:
Reference: NTSC/PAL
Signal level: 1V p-p ±3dB or 1-4V pulses
Impedance: 75Ω looping
Switching Line : 6/319 - 11/324

Power:
Supply: Auto ranging 100 to 240V AC 50/60Hz
Power Consumption: 34W

Physical:
Height: 3RU, 133mm (5.25" nom.)
Width: 19" rack mount
Depth: 485mm (19" nom.)
Weight: 11.25kg (23lb)
Operating Temp: 0-40°C
Specification maintained: 10-30°C
Ventilation: Fan cooled, air drawn in from the front and exhausted from the side

Ordering Information

Up to 64x64 in a 3RU frame with single or redundant power supplies.

Q6400-3232N	32x32 Analog Video Router
Q6400-6432N	64x32 Analog Video Router
Q6400-6464N	64x64 Analog Video Router

Ordering Options

+2PS	Redundant power supply
CI-0001	Sub-module that enables a second RS232/422 serial port
CI-0004	Sub-module that enables three additional Q-Links and one extra RS232/422 serial port
AK-0002	1RU Rear frame supporting kit

Contact factory for other configurations and for further options.

Q6400-AA

Analog Audio Router

The Q6400-AA is a mid-sized analog audio router handling up to 64 inputs and 64 outputs of stereo audio in just 3RU of rack space including an integral control system. All modules are installed from the front for easy access for upgrades and maintenance. The Q6400-AA supports an audio reverse feature which allows the left and right channels in a stereo pair to be swapped. This feature can also be used to arrange the router into a 128x64 mono configuration.

Features & Benefits

Feature Summary

- Frames may be stacked for multi-level systems
- Many matrix sizes available from 32x32 up to 64x64 mono or stereo, or even 128x64 mono
- Field upgradeable output modules in blocks of 16
- Handles time code, even at spooling speeds, as well as genuine audio signals
- Electronically balanced inputs with excellent common mode rejection
- Electronically balanced outputs
- Optional Output Crossover in blocks of 16 outputs provides the following extra features:
  - Left and right channels can be reversed
  - Left (or right) channel can be fed to both left and right outputs
  - Mono mix of left and right channels to both outputs

Configuration

The design of the Q6400-AA router allows it to be configured in square or non-square sizes. It is housed in a 3RU frame and is available in a redundant power supply configuration. The input and output stage of the router is selectable in blocks of 16 up to a maximum size of 64x64 stereo or 128x64 mono.

Control

The Q6400-AA includes, as standard, an internal Frame Controller module which supports a single Q-Link and Serial port on the rear of the router. The optional internal CI module can be fitted to the Q6400-AA to increase the number of Q-Link and Serial ports.

The Q6400-AA has a number of control options, they are:

Remote Control Panel: Any panel(s) from the entire range of Quartz remote control panels can be used with the Q6400-AA router connected via Q-Link.

External third party control: The Q6400-AA router can be remotely controlled via an external third party control device, such as an automation system, when connected to the router's serial port.

Expansion

The input or output stage of the Q6400-AA can be expanded in blocks of 16 or 32 depending upon the audio format of the router, mono or stereo.

Power Supply

The power supply for the Q6400-AA is internal and can be fitted with an optional redundant power supply with separate AC power inlet and alarm output.

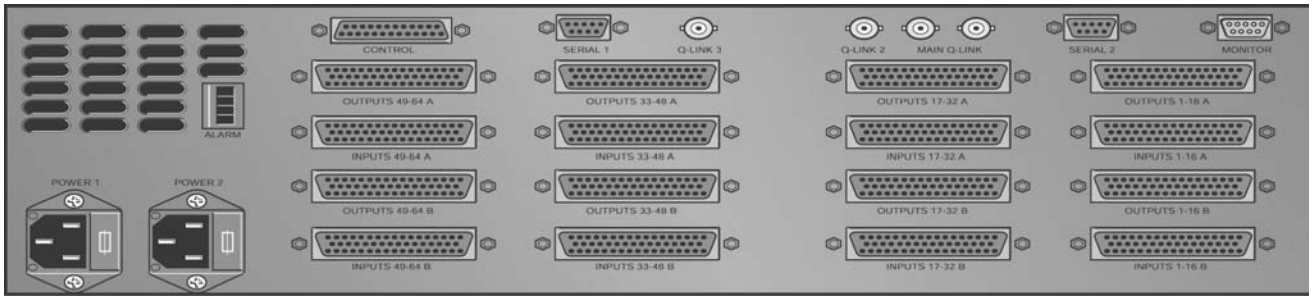

Specifications

Configuration:
Inputs:
Stereo: 16, up to 64 blocks of 16
Mono: 32 to 128 blocks of 32
Outputs:
Stereo: 16, 32, 48, 64
Mono: 32 or 64

Analog Audio Inputs:
Signal level: 0dBu nominal, +24dBu max.
Impedance: 20kΩ
Common Mode Rejection:
20Hz to 3kHz: -80dB, -100dB typical at 50/60Hz
3kHz to 20kHz: -60dB, -70dB typical at 20kHz
Common Mode Level: +27dBu maximum, no signal
Connectors: D50 female, XLR Breakout panels available

Analog Audio Outputs:
Impedance: 40Ω balanced
DC on output: ±50mV
Connectors: D50 female, XLR Breakout panels available

Signal Path:
Insertion gain: ±0.1dB
Frequency Response at 20Hz to 20kHz:
±0.25dB to 150kHz -3dB
Delay between two routes:
1µsec
Total Harmonic Distortion:
0.02%, 0.01% typical -10dBu to +20dBu and 20Hz to 20kHz
Crosstalk:
20Hz to 20kHz: -80dB Noise (unweighted)
20Hz to 20kHz: -85dB rms.

Control:
Q-link: 1 as standard (additional 3 Q-links with CI-0004 option)
75Ω video cable 500m max length
Serial RS232/422: 1 as standard (additional port with CI-0001 or CI-0004 option) D9 female

Power:
Supply: Auto ranging 100 to 240V AC 50/60Hz
Power Consumption: 120W
Backup: Optional with alarm output

Physical:
Height: 3U, 133mm (5.25" nom.)
Width: 19" rack mount
Depth: 485mm (19" nom.)
Weight: 12.7kg (27.9lb) fully loaded
Audio Connectors: D50 female multi-pin connectors carrying 16 balanced signals
Operating Temp: 0-40°C
Specification maintained:
10-30°C
Ventilation: Fan cooled. Intake at front, exhaust at right-hand side and rear

Ordering Information

Q6400-4816-AAM	48x16 Mono Audio Router
Q6400-4832-AAM	48x32 Mono Audio Router
Q6400-4848-AAM	48x48 Mono Audio Router
Q6400-6416-AAM	64x16 Mono Audio Router
Q6400-6432-AAM	64x32 Mono Audio Router
Q6400-6448-AAM	64x48 Mono Audio Router
Q6400-6464-AAM	64x64 Mono or 32x32 Dual Audio Router
Q6400-3232-AAS	32x32 Dual Audio Router
Q6400-4816-AAS	48x16 Dual Audio Router
Q6400-4832-AAS	48x32 Dual Audio Router
Q6400-4848-AAS	48x48 Dual Audio Router
Q6400-6416-AAS	64x16 Dual Audio Router
Q6400-6432-AAS	64x32 Dual Audio Router
Q6400-6448-AAS	64x48 Dual Audio Router
Q6400-6464-AAS	64x64 Dual Audio Router
Q6400-4816-AAX	48x16 Dual Audio Router with Xover
Q6400-4832-AAX	48x32 Dual Audio Router with Xover
Q6400-4848-AAX	48x48 Dual Audio Router with Xover
Q6400-6416-AAX	64x16 Dual Audio Router with Xover
Q6400-6432-AAX	64x32 Dual Audio Router with Xover
Q6400-6448-AAX	64x48 Dual Audio Router with Xover
Q6400-6464-AAX	64x64 Dual Audio Router with Xover
Q6400-9616-AAM	96x16 Mono Audio Router
Q6400-9632-AAM	96x32 Mono Audio Router
Q6400-9648-AAM	96x48 Mono Audio Router
Q6400-128016-AAM	128x16 Mono Audio Router
Q6400-128032-AAM	128x32 Mono Audio Router
Q6400-128048-AAM	128x48 Mono Audio Router
Q6400-128064-AAM	128x64 Mono Audio Router

Ordering Options

+2PS	Redundant power supply
CI-0001	RS232/RS422 Serial Card Modification to add second serial port to monitoring routers
CI-0004	Multi Q-Link Card
AK-0002	1RU Rear Frame Support Kit,
AK-0006	Audio Connectors, D50 male (each)
AK-0008	16 way XLR Breakout Panel, Male
AK-0009	16 way XLR Breakout Panel, Female
M-MO-AA-1601-0000	Q6400 Audio Output Monitoring Module, Primary
M-MO-AA-1601-0100	Q6400 Audio Output Monitoring Module, Secondary

Q256-AA, Q256-AES-AA (Balanced & Unbalanced)

Digital & Analog Audio Routers: 32x32 to 256x256

The Q256 Series feature multi-format audio routers supporting both digital (balanced and unbalanced) and analog audio I/Os. Its features include Sample Rate Conversion (SRC), "Soft Switching" and "Wild Shuffling" as well as comprehensive monitoring and diagnostic facilities.

Features & Benefits

Configuration

The Q256-AES and Q256-AA are housed in a 16RU frame, switching up to 256 sources to 256 destinations. The Q256-AA is also available in an 8RU frame, switching up to 128 sources to 128 destinations. The modular design of the Q256-AES/AA allows additional input and output modules to be installed in to the router at anytime in blocks of 32. AES and analog audio modules can be mixed in any combination within the same frame. As the analog-to-digital and digital-to-analog conversion is handled by the input and output modules, any input can be routed to any output regardless of its format type.

Control

The Q256-AES/AA routers require an external control system that operates alongside its internal controller. The external controller can be either the SC-500A or SC-1000. The SC-500A is a simple non-redundant system controller suitable for non-critical installation while the SC-1000 is a comprehensive fully redundant system controller suitable for all critical on-air installations. The SC-1000 should always be used when 100% redundancy protection is required. The System Controller handles the management of the router as well as optionally providing additional redundancy features. It's an expandable platform that supervises all of the communication and interface requirements of the Q256-AES/AA router and its control panels.

Remote Control Panel: Any panel(s) from the entire range of Quartz remote control panels can be used with the Q256-AES/AA router connected via Q-Link and the System Controller.

External third party control: The Q256-AES/AA router can be remotely controlled via an external third party control device, such as an automation system, when connected to the routers serial port. Some automation systems have the ability to connect directly to the Q256-AES/AA while others connect via the System controller.

Router Expansion

The Q256-AES/AA router can be expanded by installing extra plug-in modules into a part-populated router frame or adding additional frames to provide a routing matrix up to 1024x1024. The Q256-AES/AA router is scaled in steps of 32 from 32x32 through to 256x256 in a single 16RU frame and up to 1024x1024 by using multiple frames.

Power Supply

The power supplies for the Q256-AES/AA are internal. Both 8RU and 16RU frame can be fitted with an optional redundant power supply configuration with separate AC power inlets and alarm outputs.

Sample Rate Conversion

Sample Rate Conversion (SRC) allows the Q256-AES/AA router to accept audio input sample rates of 32KHz, 44.1kHz, 48kHz and 96kHz. On each input these sample rates are then converted to the chosen internal sample rate of 48kHz or 96kHz, before being switched to the required output destination. The use of SRC removes the complexity normally associated with systems routing multiple audio sample rates.

Soft Switching

Audio clicks can sometimes be experienced when switching between audio sources with an asynchronous or synchronous audio router. The soft switching technology used in the Q256-AES/AA router is able to predict these occasions and smooth out the audio transition for a guaranteed click- free switch. Soft switching requires a valid reference input to be present at all times.

Wild Shuffling

The Q256-AES/AA router also features Wild Shuffling allowing any input audio track to be selected with any other input audio track and routed to the same output destination.

Balanced and Unbalanced AES audio

The modular nature of the Q256-AES/AA router enables simultaneous support for a combination of both AES balanced (D50) and unbalanced (BNC) inputs and outputs.

Monitoring and Diagnostics

An important feature of the design is the integral monitoring and diagnostic facilities which allows the signal to be monitored at the inputs and at the outputs of the router. The monitoring is available externally or can be processed internally. In addition there is comprehensive monitoring of the power supplies and cooling fans. The monitoring and diagnostics can be controlled and the resulting data accessed through a serial or Ethernet port.

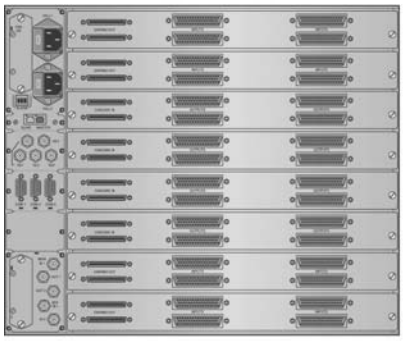

Q256-AES-AA (Balanced) Rear Panel

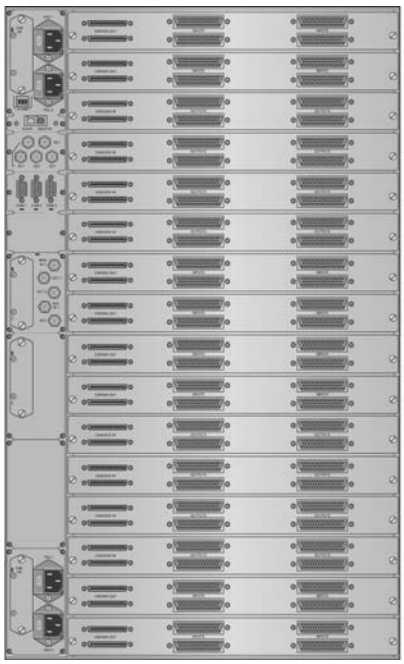

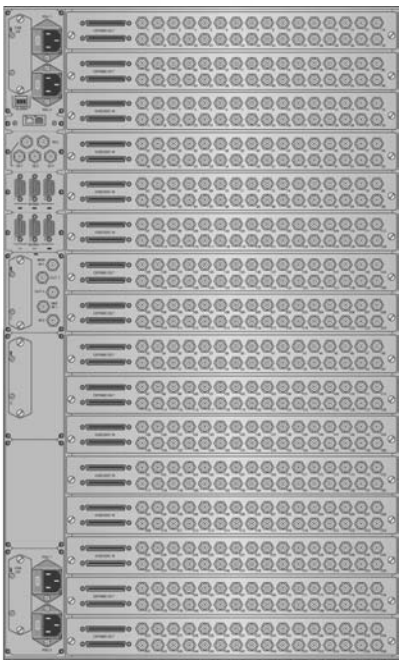

16RU & Q256-AES (Unbalanced) 16RU Rear Panels

Specifications

Configuration:
Inputs: Selectable in blocks of 32
Outputs: Selectable in blocks of 32

Audio Inputs - AES:
Sample rates: 32kHz, 44.1kHz, 48kHz, and 96kHz

Balanced version (D50):
Standard: AES3-1992
Signal level: 0.2-7V p-p
Impedance: 110Ω ±20%
Transformer coupled DC on input: ±50V
Connectors: D50 female carrying 16 signals

Unbalanced version (BNC):
Standard: SMPTE 276M
Impedance: 75Ω
Return loss: 25dB, 0.1-6.0kHz
Connectors: BNC per IEC 60169-8 Amendment 2

Audio Inputs - Analog:
Signal level: 0dBu nominal, +24dBu max.
Impedance: 20kΩ
Common mode rejection 20 to 22kHz: -74dB (typical -80 @ 50Hz)
Connectors: D50 female

Audio Outputs - AES:
Balanced version (D50):
Signal level: 2-5V p-p
Impedance: 110Ω Transformer coupled
D.C. isolation: ±50V
Rise/fall time: 3.5-10ns
Connectors: D50 female carrying 16 signals

Unbalanced version (BNC):
Signal level: 1.0V p-p ±50%
Impedance: 75Ω
Return loss: 25dB, 0.1-6.0kHz
Jitter: Conforms to ANSI S4.40 - 1992
Connectors: BNC per IEC 60169-8 Amendment 2

Audio Outputs - Analog:
Impedance: 40Ω balanced
D.C. on output: ±50mV
Connectors: D50

Control:
Q-link to remote panels: 4x 75Ω video capable 500m max. length
Serial RS232/422: 3x D9 female
Maintenance RS232: D9 female
Ethernet: 2x RJ-45, 100BaseT, TCP/IP
Monitoring: Input monitoring
Output monitoring

Power:
Supply: Auto ranging 100 to 240V AC 50/60Hz
Power Consumption:
8U: 1000W
16U: 1700W
Backup: Optional with alarm output

Physical:
Height:
8U: 14" (355mm)
16U: 28" (710mm)
Width: 19" rack mount (483mm)
Depth: 19" nom. (483mm)
Weight:
8U: 16 lbs (50kg)
16U: 32 lbs (100kg)
Operating temp: 0-40°C
Specification maintained: 10-30°C
Ventilation: Fan cooled right to left, as viewed from the front of the unit

Ordering Information

Q256-032032-AESB	Q256 32x32 Digital Audio Router (Balanced)
Q256-032032-AESU	Q256 32x32 Digital Audio Router (Unbalanced)

Ordering Options

+2PS	Redundant power supply
+FU	Redundant controller module
Q256-IP32-AESU	32 Unbalanced digital audio inputs
Q256-IP32-AESB	32 Balanced digital audio inputs
Q256-OP32-AESU	32 Unbalanced digital audio outputs
Q256-OP32-AESB	32 Unbalanced digital audio outputs
+SM	System monitor module

QT-1616H, QT-3232H

Topaz High Definition Routers

Designed to meet the needs of both the broadcast and professional video users, Topaz is an aggressively low priced routing system combining no-compromise technical specifications with a market leading control system.

With broadcast quality, reliability, and affordability, Topaz is suited to many applications, including professional, corporate/industrial markets, educational uses and the AV and presentation markets.

Features & Benefits

Configuration
The QT-1616H's are housed in a 2RU frame and switches 16 sources to 16 destinations. Both the input and output stage of the QT-1616H are fixed at 16. The QT-3232H's are also housed in a 2RU frame and can switch up to 32 sources to 32 destinations. Both the input and output stage of the QT-3232H are fixed at 32.

Control
The entire range of Topaz routers are compatible with the existing ranges of Quartz routers, remote control panels and control systems. The Topaz routers include, as standard, an internal Frame Controller module which supports a single Q-Link and Serial port on the rear of the router.

The Topaz routers have a number of control options, they are:

Local Control Panel: The CP-2402-LP can be fitted to the QT-1616H and QT-3232H.

Passive Remote Control Panels: The CP-1601A-P and CP-1604-P passive remote control panels can be fitted to the Topaz routers via a PI-1604 or PI-1608 parallel interface.

Remote Control Panel: Any panel(s) from the entire range of Quartz remote control panels can be used with the QT-1616 and QT-3232 routers connected via Q-Link.

External Third Party Control: The QT-1616 and QT-3232 routers can be remotely controlled via an external third party control device, such as an automation system, when connected to the router's serial port.

Expansion
The input and output stage of the Topaz routers are fixed at 16 and 32. They can not be expanded beyond their frame size.

Power Supply
The power supply for the the Topaz routers is external and connects to the frame via secure bayonet locking connector. The Topaz routers can be fitted with an optional redundant external power supply. An optional mounting tray securely supports both of the power supplies without the need for additional rack space.

Feature Summary
- Full broadcast specifications
- Silent operation - convection cooled
- Powerful built-in control systems
- Q-Link and Serial control
- Ethernet control
- Compatible with all Quartz routers and remote control panels
- Frames can be segmented into multiple smaller routers
- Optional power supply tray
- Redundant power supply option
- Bayonet locking power connectors

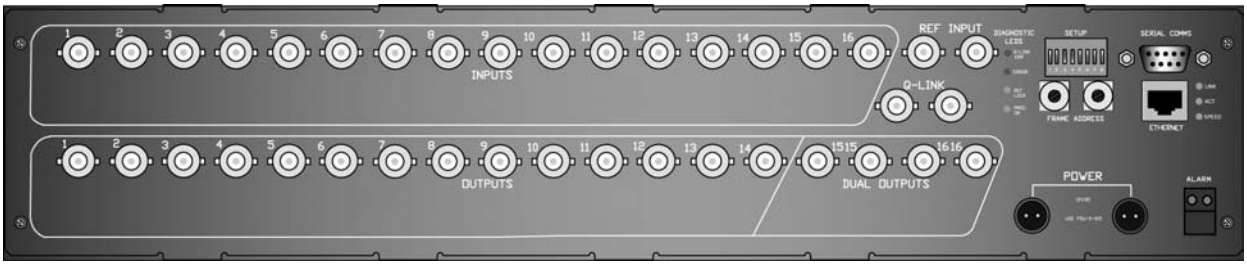

QT-1616H Rear Panel

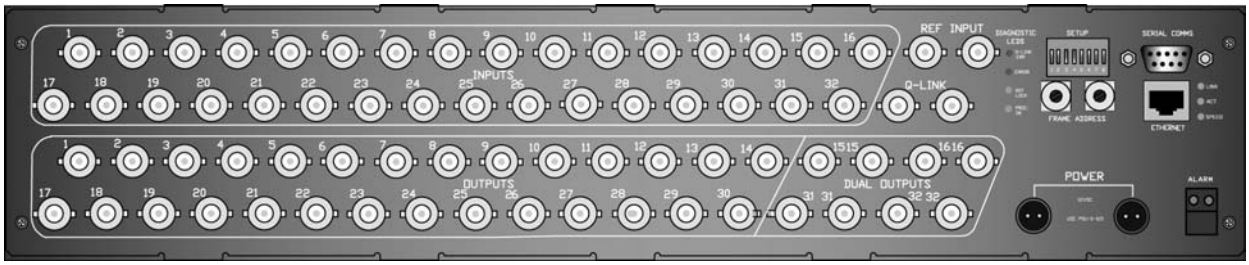

QT-3232H Rear Panel

Topaz-High Definition routers offer a full 1.5Gb/s bandwidth to handle uncompressed HD signals. Automatic Bit Rate Detection on the input equalizer allows any mix of HD and SD signals in the same unit.

Up to 95m of cable equalization is provided at HD data rates (250m at SD rates).

Specifications

Configuration:
Inputs/Outputs: Fixed at 16x16 or 32x32

Serial Video Inputs:
Standard: SMPTE 292M (1.5Gb/s), SMPTE 259M (143, 177, 270, 360)
Signal Level: 800mV p-p nominal
Impedance: 75Ω terminating
Return Loss, 5-1485MHz: 15dB
Cable equalization at 1485MHz:
Belden 8281: 95m min
Connectors: BNC per IEC 60169-8 Amendment 2

HD Video Outputs:
Standard: SMPTE 292M (1.5Gb/s), SMPTE 259M (143, 177, 270, 360) (non-reclocking)
Signal Level: 800mV p-p ±10%
Impedance: 75Ω terminating
Return Loss, 5-1485MHz: 15dB
DC Offset: 0 ±0.5V
Connectors: BNC per IEC 60169-8 Amendment 2

Signal Path:
Rise/fall times: 200 to 400ps
Output jitter: < 200ps

Control:
Q-Link to remote panels:
Cable type: 75Ω video cable
Max length: 500m
Serial RS232/422:
Signal: RS232/422
Connector: D9 socket
Ethernet: RJ45

Switching Reference:
Reference inputs: Analog 625 or 525 tri-level
Signal level: 1V p-p ±3dB or 1-4V pulses
Impedance: 75Ω
Switching Line : Lines 6/319, (625)
Lines 10/273, (525)

Power:
Supply, external: Auto ranging 100 to 240V AC 50/60Hz
Power consumption: 20W
Connections: Two pin bayonet locking
Power Fail Alarm Output: Relay contact rated 250mA, 50V
Connector screw terminals
Redundant PSU: Optional

Physical:
Height: 3.5" (90mm)
Width: 19" (483mm)
Depth: 4.75" (120mm)
Weight:
Frame: 1.45kg
PSU: 0.4kg
Operating temp. (ambient): 0-40°C
Specification maintained (ambient): 10-30°C
Humidity: 10-90% non-condensing
Ventilation: Natural convection

Ordering Information

QT-1616H	HD/SD 16x16 High Definition router
QT-3232H	HD/SD 32x32 High Definition router

Ordering Options

+2PS	Redundant power supply
+TL	Lefthand power supply support tray
+TR	Righthand power supply support tray
QT-CONFIG	Topaz custom configuration
CP-2402-LP	Local Control Panel

QT-1616S, QT-3232S

Topaz Standard Definition Routers

Designed to meet the needs of both the broadcast and professional video users, Topaz is an aggressively low priced routing system combining no-compromise technical specifications with a market leading control system.

With broadcast quality, reliability, and affordability, Topaz is suited to many applications, including professional, corporate/industrial markets, educational uses and the AV and presentation markets.

Features & Benefits

Configuration
The QT-1616S is housed in a 2RU frame and switches 16 sources to 16 destinations. Both the input and output stage of the QT-1616S is fixed at 16. The QT-3232S is also housed in a 2RU frame and can switch up to 32 sources to 32 destinations. Both the input and output stage of the QT-3232S is fixed at 32.

Control
The entire range of Topaz routers are compatible with the existing ranges of Quartz routers, remote control panels and control systems. Both the QT-1616S and the QT-3232S routers include, as standard, an internal Frame Controller module which supports a single Q-Link and Serial port on the rear of the router.

The QT-1616S and QT-3232S have a number of control options, they are:

Local Control Panel: The CP2402-LP can be fitted to the QT-1616S or QT-3232S.

Passive Remote Control Panels: The CP-1601A-P and CP-1604-P passive remote control panels can be fitted to the Topaz routers via a PI-1604 or PI-1608 parallel interface.

Remote Control Panel: Any panel(s) from the entire range of Quartz remote control panels can be used with the QT-SD-1616 and QT-SD-3232 router connected via Q-Link.

External third party control: The Topaz routers can be remotely controlled via an external third party control device, such as an automation system, when connected to the router's serial port.

Expansion
The input and output stage of both the QT-1616S and the QT-3232S are fixed at 16 and 32. They can not be expanded beyond their frame size.

Power Supply
The power supply for the Topaz routers is external and connects to the frame via secure bayonet locking connector. The Topaz routers can be fitted with an optional redundant external power supply. An optional mounting tray securely supports both of the power supplies without the need for additional rack space.

Feature Summary
- Full broadcast specifications
- Silent operation - convection cooled
- Powerful built-in control systems
- Q-Link and Serial control
- Ethernet control
- Compatible with all Quartz routers and remote control panels
- Frames can be segmented into multiple smaller routers
- Optional power supply tray
- Redundant power supply option
- Bayonet locking power connectors

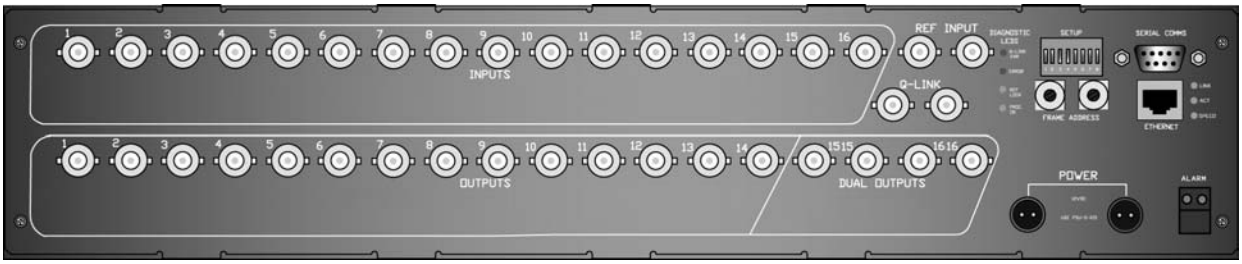

QT-1616S Rear Panel

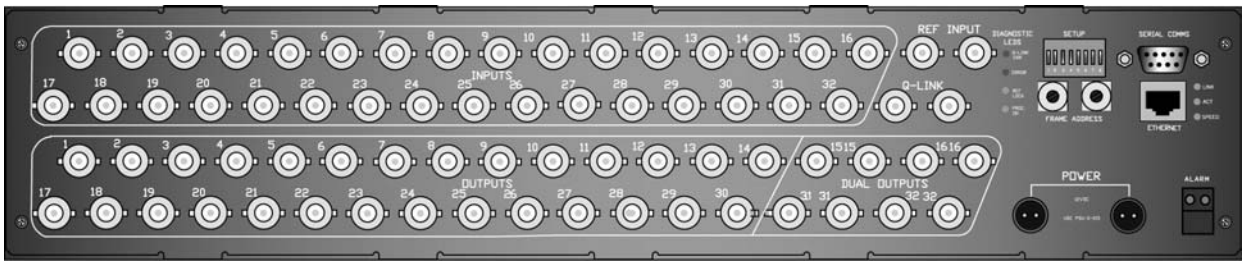

QT-3232S Rear Panel

Topaz-Standard Definition routers handle a wide range of digital signals up to 360Mb/s. Typically used to carry SDI or ASI signals at 270Mb/s or 360MB/s, Topaz-SD will also handle lower bitrate signals since it does not re-clock inputs or outputs.

Embedded Audio Signals carried on the SDI signal are passed through transparently.

Specifications

Configuration:
Inputs/Outputs: Fixed at 16x16 or 32x32

SD Video Inputs
Standard: SMPTE 259M-C (270Mb/s)
Signal Level: 800mV p-p nominal
Impedance: 75Ω terminating
Return Loss, 5-270 MHz: 15dB
Cable equalization:
Belden 8281
BBC PSF1/2: 250m min
BBC PSF1/3: 150m min
Connectors: BNC per IEC 60169-8 Amendment 2

SD Video Outputs:
Standard: SMPTE 259M-C (270Mb/s)
Signal Level: 800mV p-p ±10%
Impedance: 75Ω terminating
Return Loss, 5-270MHz: 15dB
DC Offset: 0 ±0.5V
Connectors: BNC per IEC 60169-8 Amendment 2

Signal Path:
Rise/fall times: 0.4 to 1.5ns
Path length: 12ns, typical
Output jitter: 0.2 UI p-p with < 250m input cable

Control:
Q-Link to remote panels:
Cable type: 75Ω video cable
Max length: 500m
Serial RS232/422:
Signal: RS232/422
Connector: D9 female
Ethernet: RJ45

Switching Reference:
Reference inputs: Analog 625 or 525
Signal level: 1V p-p ±3dB
Impedance: 75Ω
Line switching: Lines 6/319 (625)
Lines 10/273 (525)

Power:
Supply, external: Auto ranging 100 to 240V AC 50/60Hz
Power consumption: 20W
Connections: Two pin bayonet locking
Power Fail Alarm Output:
Relay contact rated 250mA, 50v
Connector screw terminals
Redundant PSU: Optional

Physical:
Height: 3.5" (90mm)
Width: 19" (483mm)
Depth: 4.75" (120mm)
Weight:
Frame: 1.45kg
PSU: 0.4kg
Operating temp. (ambient):
0-40°C
Specification maintained (ambient):
10-30°C
Humidity: 10-90% non-condensing
Ventilation: Natural convection

Ordering Information

QT-1616S	SD 16x16 router
QT-3232S	SD 32x32 router

Ordering Options

+2PS	Redundant power supply
+TL	Lefthand power supply support tray
+TR	Righthand power supply support tray
QT-CONFIG	Topaz custom configuration
CP-2402-LP	Local Control Panel

QT-1616N, QT-3232N

Topaz Analog Video Routers

Designed to meet the needs of both the broadcast and professional video users, Topaz is an aggressively low priced routing system combining no-compromise technical specifications with a market leading control system.

With broadcast quality, reliability, and affordability, Topaz is suited to many applications, including professional, corporate/industrial markets, educational uses and the AV and presentation markets.

Features & Benefits

Configuration
The QT-1616N router is housed in a 2RU frame and switches 16 sources to 16 destinations. Both the input and output stage of the QT-1616 is fixed at 16. The QT-3232N router is also housed in a 2RU frame and can switch up to 32 sources to 32 destinations. Both the input and output stage of the QT-3232 is fixed at 32.

Control
The entire range of Topaz routers are compatible with the existing ranges of Quartz routers, remote control panels and control systems. The Topaz routers include, as standard, an internal Frame Controller module which supports a single Q-Link and Serial port on the rear of the router.

The Topaz routers have a number of control options, they are:

Local Control Panel: The CP-2402-LP can be fitted to the QT-1616N and QT-3232N.

Passive Remote Control Panels: The CP-1601A-P and CP-1604-P passive remote control panels can be fitted to the Topaz routers via a PI-1604 or PI-1608 parallel interface.

Remote Control Panel: Any panel(s) from the entire range of Quartz remote control panels can be used with the Topaz routers connected via Q-Link.

External third party control: The Topaz routers can be remotely controlled via an external third party control device, such as an automation system, when connected to the router's serial port.

Expansion
The input and output stage of both the Topaz routers are fixed at 16 and 32. They can not be expanded beyond their frame size.

Power Supply
The power supply for the Topaz routers is external and connects to the frame via secure bayonet locking connector. The Topaz routers can be fitted with an optional redundant external power supply. An optional mounting tray securely supports both of the power supplies without the need for additional rack space.

Feature Summary
- Full broadcast specifications
- Silent operation - convection cooled
- Powerful built-in control systems
- Q-Link and Serial control
- Ethernet control
- Compatible with all Quartz routers and remote control panels
- Frames can be segmented into multiple smaller routers
- Optional power supply tray
- Redundant power supply option
- Bayonet locking power connectors

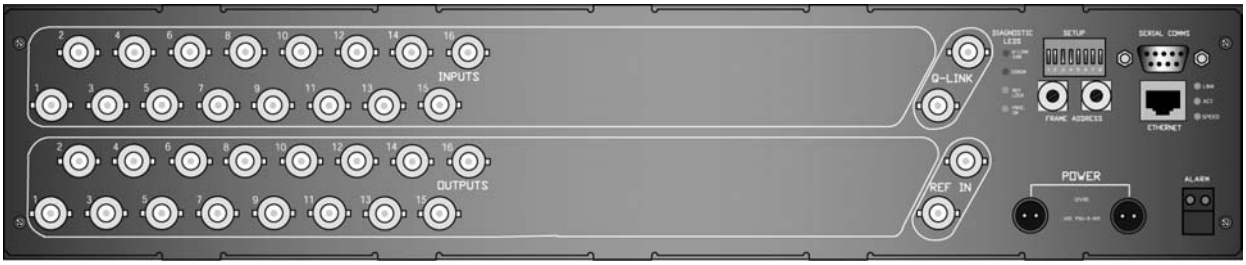

QT-1616N Rear Panel

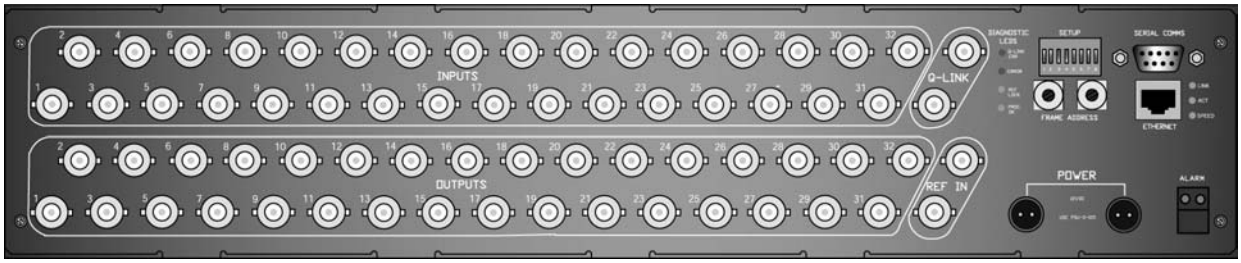

QT-3232N Rear Panel

Topaz-Analog Video routers provide excellent performance and reliability at an exceptional price for any analog video application. Full Broadcast Specifications with 75Ω terminating inputs. DC Restored Inputs and vertical interval switching for disturbance free switches.

Component Video signals can be handled by stacking multiple units, or internally splitting the unit into several virtual levels. This allows support of many formats by simple configuration changes.

Specifications

Configuration:
Inputs/Outputs: Fixed at 16x16 or 32x32

Analog Video Inputs:
Nominal signal Level:
Video signal: 1V p-p
Sync pulse (separate H+V): 2V p-p
Max signal level:
DC restored inputs
Video signal: +6dB
Sync pulse (separate H+V): 2.5V p-p
DC coupled inputs
Video: ±0.7V
Impedance: 75Ω terminating
Return Loss, 5-270MHz: 40dB
DC on input (DC restored): ±3V
Connectors: BNC per IEC 60169-8 Amendment 2

Analog Video Outputs:
Impedance: 75Ω
Return Loss to 5.5MHz: 40dB
DC on output: ±50mV
Connectors: BNC per IEC 60169-8 Amendment 2

Insertion Gain:
Insertion gain: ±0.1dB
Gain spread between inputs: ±0.05dB

Distortion:
HF response
15kHz to 5.5MHz: ±0.1dB
5.5 to 10MHz: ±0.2dB
10MHz to 100MHz: +0.5, -1.0dB
Above 100MHz: smooth roll off
LF response, tilt at 50Hz: ±0.5%
Y-C gain inequality: ±0.5%
Y-C delay inequality: ±5nsec
Differential Gain (10-90% APL): 0.25%
Differential Phase (10-90% APL): 0.15°
Path length, typical: 13nsec typical

Unwanted Residual Effects:
Crosstalk, at 5.5MHz worst case: -60dB
Noise to 5.5Mz: -70dBrms

Control:
Q-Link to remote panels: 75Ω video cable
Max length: 500m
Serial RS232/422:
Connector: D9 socket
Ethernet: RJ45

Switching Reference:
Reference inputs: Analog 625 or 525
Signal level: 1V p-p +6dB, -3dB
Impedance: 75Ω
Switching Line: Lines 6/319 (625)
Lines 10/273 (525)

Power:
Supply, external: Auto ranging 100 to 240V AC 50/60Hz
Power Consumption: 20W
Connections: Two pin bayonet locking
Power Fail Alarm Output:
Relay contact: Rated 250mA, 50V
Connector: Screw terminals
Redundant PSU: Optional

Physical:
Height: 3.5" (90mm)
Width: 19" (483mm)
Depth: 4.75" (120mm)
Weight:
Frame: 1.45kg
PSU: 0.4kg
Operating temp.(ambient): 0-40°C
Specification maintained (ambient): 10-30°C
Humidity: 10-90% non-condensing
Ventilation: Natural convection

Ordering Information

QT-1616N	16x16 Analog Video router
QT-3232N	32x32 Analog Video router

Ordering Options

+2PS	Redundant power supply
+TL	Lefthand power supply support tray
+TR	Righthand power supply support tray
QT-CONFIG	Topaz custom configuration
CP-2402-LP	Local Control Panel

QT-1616-AA, QT-3232-AA

Topaz Analog Audio Routers

Designed to meet the needs of both the broadcast and professional video users, Topaz is an aggressively low priced routing system combining no-compromise technical specifications with a market leading control system.

With broadcast quality, reliability, and affordability, Topaz is suited to many applications, including professional, corporate/industrial markets, educational uses and the AV and presentation markets.

Features & Benefits

Configuration
The QT-1616-AA router is housed in a 2RU frame and switches 16 sources to 16 destinations. Both the input and output stage of the QT-1616-AA is fixed at 16. The QT-3232-AA router is also housed in a 2RU frame and can switch up to 32 sources to 32 destinations. Both the input and output stage of the QT-3232-AA is fixed at 32.

Control
The entire range of Topaz routers are compatible with the existing ranges of Quartz routers, remote control panels and control systems. The Topaz routers include, as standard, an internal Frame Controller module which supports a single Q-Link and Serial port on the rear of the router.

The Topaz routers have a number of control options, they are:

Local Control Panel: The CP-2402-LP can be fitted to the QT-1616-AA and QT-3232-AA.

Passive Remote Control Panels: The CP-1601A-P and CP-1604-P passive remote control panels can be fitted to the Topaz routers via a PI-1604 or PI-1608 parallel interface.

Remote Control Panel: Any panel(s) from the entire range of Quartz remote control panels can be used with the Topaz routers connected via Q-Link.

External third party control: The Topaz routers can be remotely controlled via an external third party control device, such as an automation system, when connected to the router's serial port.

Expansion
The input and output stage of both the Topaz routers are fixed at 16 and 32. They can not be expanded beyond their frame size.

Power Supply
The power supply for the Topaz routers is external and connects to the frame via secure bayonet locking connector. The Topaz routers can be fitted with an optional redundant external power supply. An optional mounting tray securely supports both of the power supplies without the need for additional rack space.

Feature Summary
- Full broadcast specifications
- Silent operation - convection cooled
- Powerful built-in control systems
- Q-Link and Serial control
- Ethernet control
- Compatible with all Quartz routers and remote control panels
- Frames can be segmented into multiple smaller routers
- Optional power supply tray
- Redundant power supply option
- Bayonet locking power connectors

QT-1616-AA Rear Panel

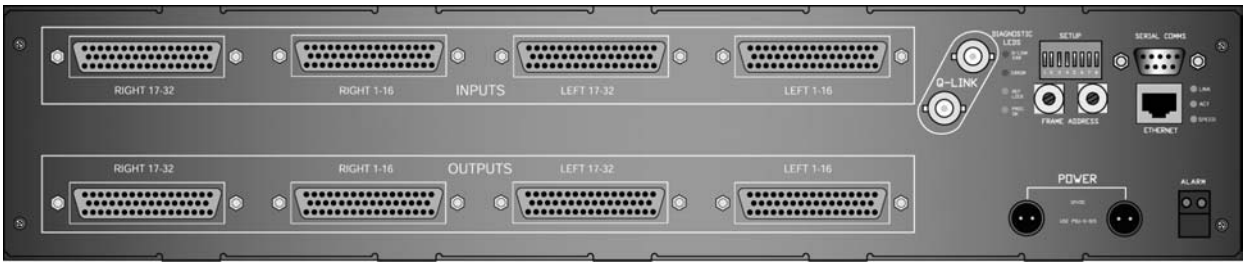

QT-3232-AA Rear Panel

Topaz-Analog Audio routers may be used as a companion audio router, working with Topaz video routers, or as a standalone audio router. With its outstanding performance the Topaz-AA even suits the most demanding audio applications.

Timecode Signals may be passed through Topaz-AA, even when shuttling tape. Each Topaz-AA Frame carries two channels of audio. Frames may be stacked when additional channels are required or split into sections to add channels in the same frame.

Specifications

Configuration:
Inputs/Outputs: Fixed at 16x16 or 32x32 Stereo

Analo Audio Inputs:
Signal Level: 0dB nominal, +24dBu max
Impedance: 20kΩ
Common Mode Rejection:
40dB
Typical at 50/60Hz: -100dBu
Nominal 20Hz to 3kHz:
-80dBu
Nominal 3khz to 20kHz:
-60dBu
Common Mode Level:
+27dBu maximum, no signal
Connectors: D50 female

Analog Audio Outputs:
Impedance: 40Ω balanced
DC on output: ±50mV
Connectors: D50 female

Signal Path:
Insertion gain: ±0.1dB
Frequency response:
20Hz to 20kHz: ±0.25dB
20kHz to 150kHz: -3dB
Delay between two routes:
1m sec
Total harmonic distortion:
-10dBu to +20dBu:
0.02%, 0.01% typical
Crosstalk 20Hz to 20kHz:
-80dB
Noise (un-weighted) 20Hz to 20kHz:
-85dB rms

Control:
Q-Link to remote panels:
Cable type: 75Ω video cable
Max length: 500m
Serial RS232/422:
Signal: RS232/422
Connector: D9 socket
Ethernet: RJ45

Power:
Supply, external: Auto ranging 100 to 240V AC
50/60Hz
Power consumption: 20W
Connections: Two pin bayonet locking
Power Fail Alarm Output:
Relay contact: Rated 250mA, 50V
Connector: Screw terminals
Redundant PSU: Optional

Physical:
Height: 3.5" (90mm)
Width: 19" (483mm)
Depth: 4.75" (120mm)
Weight:
Frame: 1.45kg
PSU: 0.4kg
Operating temp.(ambient):
0-40°C
Specification maintained (ambient):
10-30°C
Humidity: 10-90% non-condensing
Ventilation: Natural convection

Ordering Information

QT-1616-AA	16x16 Analog Audio router
QT-3232-AA	32x32 Analog Audio router

Ordering Options

+2PS	Redundant power supply
+TL	Lefthand power supply support tray
+TR	Righthand power supply support tray
QT-CONFIG	Topaz custom configuration
CP-2402-LP	Local Control Panel

X-0401H, X-0401H-AES4, X-0401H-AES4-HSS & X-0401H-AES4-HES

4x1 HDTV Router with Quad 4x1 AES Audio

The X-0401H HDTV four input routing switcher provides a convenient, low cost way to route high definition and standard definition serial digital signals. The X-0401H routers are used for 1.5Gb/s, 270Mb/s, 360Mb/s, 540Mb/s and DVB-ASI serial digital signals. The unit can also be used for SMPTE 310M (19.4Mb/s) signals with the reclocker turned off. When the unit is ordered with the Quad 4x1 AES router option the AES output busses can be used in an "audio follow video" mode, or can be broken away from the video buss. The routers feature redundancy protection by providing dual power supply and bypass relay options.

The router electronics are housed in a 1RU rackmount frame and controlled from the built-in front panel controls. Each model can also be purchased with an optional rack mount remote control panel that replaces the built-in control panel or can be used as a second control panel. All units can also be controlled by contact closures on the GPI control port or through the RS-232 or RS-422 serial remote control port using industry standard switcher protocols.

SoftSwitch™ Features (X-0401H-AES4-HSS)

Routers equipped with SoftSwitch™ have the following additional features. The video output has adjustable vertical timing with respect to the genlock input, and line synchronizers on the video inputs can accommodate differences in timing up to approximately ± one half line providing clean video switches on the video output. All the AES outputs will have a continuous AES carrier locked to either the video genlock or DARS reference (when the DARS reference is used, Z bit alignment of the AES outputs is also guaranteed). The AES outputs use Evertz patent pending SoftSwitch™ technology to eliminate audible pops when switches are performed on synchronous audio sources.

Embedded SoftSwitch™ Features (X-0401H-AES4-HES)

Routers equipped with the Embedded SoftSwitch™ have all the features of the SoftSwitch™ versions as well as the following additional features. The embedded audio on the Video 1 buss uses Evertz patent pending SoftSwitch™ technology to eliminate audible pops when switches are performed. Embedded SoftSwitch™ is performed on all 4 audio groups.

Features & Benefits

- Supports SMPTE 292M (1.5Gb/s), SMPTE 259M (270, 360 or 540Mb/s) and DVB-ASI video signals
- Supports SMPTE 310M (19.4Mb/s) signals with reclocker turned off
- SoftSwitch™ equipped models elimiate hot-switch audio pop on AES outputs
- Auto timing of video inputs to perform a clean video switch on SoftSwitch™ & Embedded SoftSwitch™ versions
- Embedded SoftSwitch™ equipped versions elimiate hot-switch audio pops on embedded audio (all 4 audio groups)
- Switch point is fully controllable from the front panel
- Video input presence detection displayable on the front panel
- Front panel or remote control panel version available
- Second control panel can be ordered for any version
- Programmable source input names available on the front panel
- Bypass verification test using main menu
- Field upgradeable firmware as new features become available
- Programmable tally output bus
- RS-422 remote control via GVG TEN-XL protocol
- SoftSwitch™ model provides clean video and popless AES switching
- Optional video and audio input relay bypass for power failure bypass protection
- Optional dual power configuration
- Optional remote control via SNMP (using VistaLINK® PRO or 9000NCP2 control panel)

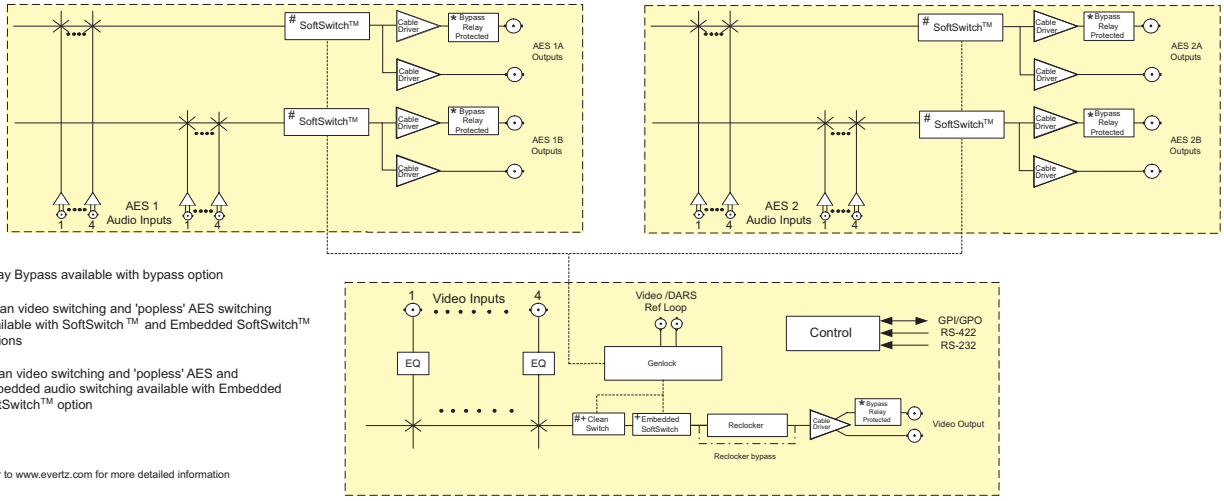

* Relay Bypass available with bypass option

\# Clean video switching and 'popless' AES switching available with SoftSwitch ™ and Embedded SoftSwitch™ options

\+ Clean video switching and 'popless' AES and embedded audio switching available with Embedded SoftSwitch™ option

Refer to www.evertz.com for more detailed information

X-0401H, X-0401H-AES4, X-0401H-AES4-HSS & X-0401H-AES4-HES

4x1 HDTV Router with Quad 4x1 AES Audio

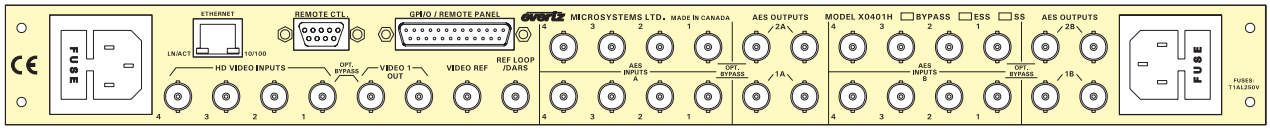

Specifications

Video Inputs:
Standard: SMPTE 292M (1.5Gb/s), SMPTE 259M (270Mb/s, 360Mb/s, 540Mb/s) and DVB-ASI
SMPTE 310M with reclocker turned off
Number of Inputs: 4
Connector: BNC per IEC 60169-8 Amendment 2
Equalization: Automatic up to 100m @1.485Gb/s with Belden 1694A (or equivalent) cable (50m on input 1 when the +HBP is installed)
Return Loss: > 15dB up to 1.5Gb/s
Input Timing
(On X-0401H-AES4-HSS & X-0401H-AES4-HES Routers):
Input Range: Measured with respect to the Genlock reference
±1/2 line when Course phase = 1, Fine phase = 0

Video Outputs:
Standard: Same as Input
Number of Outputs: 2 per bus, 1 bus
Input 1 bypass protected with +HBP option
Connector: BNC per IEC 60169-8 Amendment 2
Signal Level: 800mV nominal
DC Offset: 0V ±0.5V
Rise and Fall Time: 200ps for SMPTE 292M
950ps for SMPTE 259M
Overshoot: < 10% of amplitude
Return Loss: > 15dB up to 1Gb/s, > 12dB up to 1.5Gb/s
Jitter: < 0.2 UI
Output Timing
(On X-0401H-AES4-HSS & X-0401H-AES4-HES Routers):
Output Phase: Measured with respect to the Genlock reference Adjustable 1 line to a full frame of delay - set by Coarse phase parameter. The active video content will align to the nearest line

AES Audio Inputs (AES4 versions only):
Standards: SMPTE 276M single ended AES
Number of Inputs: 4 per bus, 4 bus
Connector: BNC per IEC 60169-8 Amendment 2
Signal Level: 1V p-p ±10%

AES Audio Outputs (AES4 versions only):
Standards: SMPTE 276M single ended AES
Number of Outputs: 2 per bus, 4 busses
Input 1 bypass protected with +HBP option
Connector: BNC per IEC 60169-8 Amendment 2
Signal Level: 1V p-p
Reference: From Video Reference
On SoftSwitch™ model, menu selectable to Video or DARS

Video Reference:
Type: Menu selectable - depends on video format NTSC or PAL Color Black 1V p-p
Composite Bi-level sync (525i/59.94 or 625i/50) 300mV
HD Tri-level Sync
Connectors: 2 BNC per IEC 60169-8 Amendment 2
Termination:
Standard models: High impedance loop through
SoftSwitch™ model: High impedance loop through or non-looping or 75Ω non-looping (jumper selectable)

Ethernet (+ET option):
Network Type: Fast Ethernet 100 Base-TX IEEE 802.3u standard for 100 Mbps baseband CSMA/CD local area network
Ethernet 10 Base-T IEEE 802.3 standard for 10 Mbps baseband CSMA/CD local area network
Connector: RJ-45
Function: Router control using VistaLINK®

DARS Reference:
(X-0401H-AES4-HSS & X-0401H-AES4-HES Routers):
DARS reference requires jumper configuration inside the router
Standard: SMPTE 276M single ended AES
Type: Digital Audio Signal with 48khz sample rate
Connector: BNC per IEC 60169-8 Amendment 2
Termination: Inactive or High impedance non-looping or 75Ω non-looping (jumper selectable)
Signal Level: 1V p-p
Freq. Lock Range: ±100ppm from nominal

GPI Control Port:
Number of Inputs: 8 opto-isolated, programmable functions
Number of Outputs: 4 sets of relay contacts, normally closed, programmable functions
Relay Max Current: 1A at 30V DC

Serial Remote Control:
Standard: RS-232 or RS-422, programmable baud rate
Connector: 9-pin female "D"
Protocol: GVG Ten XL ASCII, master or slave or Remote Control Panel

Remote Control Panel Port:
Standard: RS-422, 9600 baud rate
Connector: 6 pins on GPIO 25-pin female "D"
Protocol: Remote Control Panel

Physical:
Height: 1.75" (45mm)
Width: 19" (483mm)
Depth: 7.75" (196mm)
Weight: 8lbs (3.5kg)

Electrical:
Voltage: Auto ranging 100-240V AC, 50/60Hz 40W
Fuse Rating: 250V, 1 amp time delay
Safety: ETL Listed, complies with EU safety directives
EMI/RFI: Complies with FCC Part 15 Class A regulations
Complies with EU EMC Directive

Ordering Information

X-0401H	4x1 HDTV video router
X-0401H-AES4	4x1 HDTV video router with 4 (4x1) AES busses
X-0401H-AES4-HSS	4x1 HDTV video router with 4 (4x1) AES busses and SoftSwitch™
X-0401H-AES4-HES	4x1 HDTV video router with 4 (4x1) AES busses and Embedded SoftSwitch™

Ordering Options

+HBP	Optional bypass relay
+2PS	Redundant power supply
+ET	Ethernet Router Control using VistaLINK® ***(At time of writing +ET option only available on HES version)***
+RCP	Rackmount remote control panel (replaces front control panel)

Accessories

X-0401H-PANEL	Additional Remote Control Panel (works in addition to front control panel)

X-0601H-444

6x1 HDTV Dual Link Router with Quad 6x1 AES Audio

The X-0601H-444 HDTV six input video router provides a convenient, low cost way to route dual link 1.5Gb/s HDTV serial digital signals. When the unit is ordered with the 6x1 AES router option the AES output busses can be used in an "audio follow video" mode, or can be broken away from the video buss. The routers feature redundancy protection by providing dual power supply and bypass relay options. The router electronics are housed in a 1RU rackmount frame and controlled from the built-in front panel controls. Each model can also be purchased with an optional rack mounted remote control panel that replaces the built-in control panel. All units can also be controlled by contact closures on the GPI control port or through the RS-232 serial remote control port using industry standard switcher protocols.

Optional SoftSwitch™ Feature (+HSS Option)
Routers equipped with the SoftSwitch™ option have the following additional features. All the AES outputs will have a continuous AES carrier locked to either the video genlock or DARS reference (when the DARS reference is used, Z bit alignment of the AES outputs is also guaranteed). The AES outputs use Evertz patent pending SoftSwitch™ technology to eliminate audible pops when switches are performed on synchronous audio sources.

Features & Benefits

- Supports dual link SMPTE 372M and single link SMPTE 292M (1.5Gb/s) video signals
- Can be operated in a non-reclock mode to pass SMPTE 259M video signals
- Optional SoftSwitch™ technology eliminates hot-switch audio pops on AES outputs
- Switch line is fully controllable from the front panel
- Video input presence detection displayable on the front panel
- Front panel or remote control panel versions available
- Second control panel can be ordered for either version
- Parallel GPI and RS-232 serial control
- Programmable source input names available on the front panel
- Optional video and audio input relay bypass for power failure bypass protection
- Optional dual power supplies
- Field upgradeable firmware as new features become available

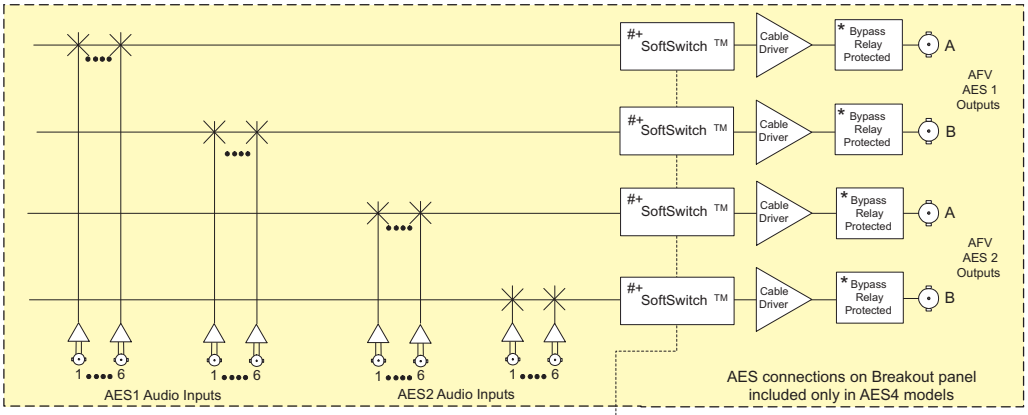

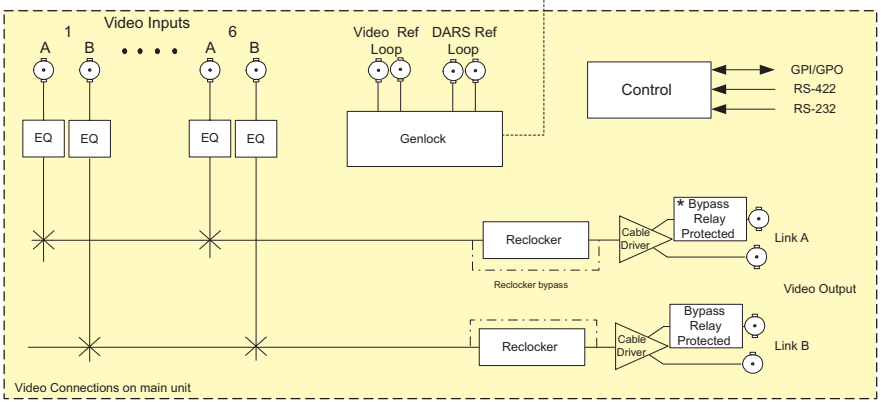

* Relay Bypass available with bypass option

\# 'Popless' AES switching available with SoftSwitch™ version

Refer to www.evertz.com for more detailed information

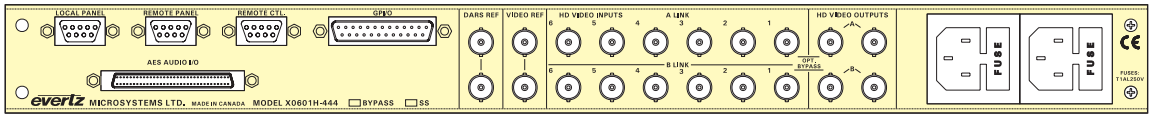

X0601 Audio AES Breakout Panel

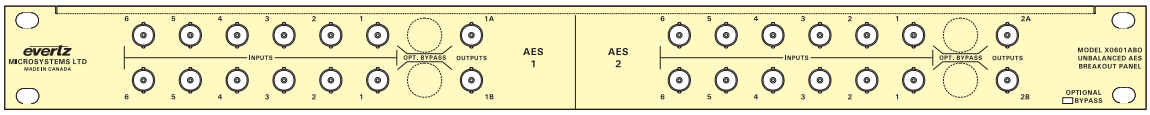

Specifications

HD Video Inputs:
Standard: SMPTE 372M dual link (1.5Gb/s) or 292M (1.5Gb/s)
SMPTE 259M with reclocker turned off
Number of Inputs: 6 dual link pairs
Connector: BNC per IEC 60169-8 Amendment 2
Equalization: Automatic 100m @ 1.485Gb/s with Belden 1694A (or equivalent)
(50m on input 1 with +HBP option)
Return Loss: > 15dBV up to 1.5Gb/s

HD Video Outputs:
Standard: Same as input
Number of Outputs: 2 dual link pairs
Input 1 bypass protected with +HBP option
Connector: BNC per IEC 60169-8 Amendment 2
Signal Level: 800mV nominal
DC Offset: 0V ±0.5V
Rise and Fall Time: 200ps nominal
Overshoot: < 10% of amplitude
Return Loss: > 15dB up to 1Gb/s, > 12dB up to 1.5Gb/s
Jitter: < 0.2 UI

AES Audio Inputs (AES4 version only):
Standard:
+B option: AES3-2003 balanced
+U option: SMPTE 276M single ended AES
Number of Inputs: 6 per buss, 4 busses
Connector (On breakout panel(s) provided):
+B option: Removable terminal strips
+U option: BNC per IEC 60169-8 Amendment 2
Signal Level:
+B option: 2-7V p-p ±10%
+U option: 1V p-p ±10%

AES Audio Outputs (AES4 version only):
Standard: Same as input
Number of Outputs: 2 per buss, 4 busses
Input 1 bypass protected with +HBP option
Connector: Same as input
Signal Level:
+B option: 2V p-p nominal
+U option: 1V p-p nominal
Reference: From Video Genlock Reference
DARS reference available with +HSS option

Video Reference:
Type: Menu selectable - depends on video format
HD Tri-level Sync
NTSC or PAL Color Black 1V p-p
Composite Bi-level sync (525i/59.94 or 625i/50) 300mV
Connectors: 2 BNC per IEC 60169-8 Amendment 2
Termination: High impedance loop through

DARS Reference (On +HSS Optioned Routers):
Type: Digital Audio Signal with 48kHz sample rate
Standard: SMPTE 276M single ended AES
Connector: 2 BNC per IEC 60169-8 Amendment 2
Termination: High impedance loop through
Signal Level: 1V p-p
Freq. Lock Range: ±100ppm from nominal

GPI Control Port:
Number of Inputs: 14 opto-isolated, programmable functions
Number of Outputs: 4 sets of relay contacts, normally closed, programmable functions
Relay Max Rating: 1A at 30V DC

Serial Remote Control:
Standard: RS-232 or RS422, programmable baud rate
Connector: 9-pin female "D"
Protocol: GVG Ten XL ASCII, master or slave or remote control panel

Physical:
Height: 1.75" (45mm)
Width: 19" (483mm)
Depth: 18.75" (477mm)
Weight: 8lbs (3.5kg)

Electrical:
Voltage: Auto ranging 100-240V AC 50/60Hz 40W
Safety: ETL Listed
Complies with EU safety directives
EMI/RFI: Complies with FCC Part 15 Class A
EU EMC Directive

Ordering Information

X-0601H-444	6x1 Dual Link HDTV Router
X-0601H-444-AES4	6x1 Dual Link HDTV video router with 4 (6x1) AES busses (includes 1 AES breakout panel)

Ordering Options

+HSS	SoftSwitch™ Option
+HBP	Bypass Relay Protection
+2PS	Redundant Power Supply
+RCP	Rack Mount Remote Control Panel (replaces front control panel)

(Must specify +B or +U version when ordering AES4)

+B	Balanced AES Audio Breakout Panel
+U	Unbalanced AES Audio Breakout Panel

Accessories

X-0601H-444-PANEL	Additional Remote Control Panel(works in addition to front control panel)
X-0601ABO	Unbalanced AES Audio Breakout Panel
X-0601ABOB	Balanced AES Audio Breakout Panel
X-0601ABOB-BP	Balanced AES Audio Breakout Panels (with Bypass Relays)
X-0601ABO-BP	Unbalanced AES Audio Breakout Panel (with Bypass Relays)

X-1201H, X-1201H-AES, X-1201H-AES4

12x1 HDTV Router with Dual or Quad 12x1 AES Audio

The X-1201H HDTV twelve input video router provides a convenient, low cost way to route standard and high definition serial digital signals. The X-1201H routers are used for 1.5Gb/s HDTV serial digital signals. When the unit is ordered with the Dual 12x1 AES router or Quad 12x1 AES router options the AES output busses can be used in an "audio follow video" mode, or can be broken away from the video buss. The routers feature redundancy protection by providing dual power supply and bypass relay options.

The router electronics are housed in a 1RU rackmount frame and controlled from the built-in front panel controls. Each model can also be purchased with an optional rack mounted remote control panel that replaces the built-in control panel or can be used as a second control panel. All units can also be controlled by contact closures on the GPI control port or through the RS-232 serial remote control port using industry standard switcher protocols.

Optional SoftSwitch™ Features (+HSS Option)

Routers equipped with the SoftSwitch™ option have the following additional features. The video output has adjustable vertical timing with respect to the genlock input, and line synchronizers on the video inputs can accommodate differences in timing up to approximately ± one half line providing clean video switches on the video output (for HD video only). All the AES outputs will have a continuous AES carrier locked to either the video genlock or DARS reference (when the DARS reference is used, Z bit alignment of the AES outputs is also guaranteed). The AES outputs use Evertz patent pending SoftSwitch™ technology to eliminate audible pops when switches are performed on synchronous audio sources.

Optional Embedded SoftSwitch™ Features (+HES Option)

Routers equipped with the Embedded SoftSwitch™ option have all the features of the SoftSwitch™ versions as well as the following additional features. The embedded audio on the Video 1 buss uses Evertz patent pending SoftSwitch™ technology to eliminate audible pops when switches are performed. Embedded SoftSwitch™ is performed on all 4 audio groups.

Features & Benefits

- Supports SMPTE 292M (1.5Gb/s) video signals
- Can be operated in a non-reclock mode to pass SMPTE 259M video signals
- Units can be genlocked to an external source so that a "clean switch" can be achieved
- Autotiming of V1 buss inputs to perform a clean video switch when SoftSwitch™ or Embedded SoftSwitch™ option is installed
- Optional SoftSwitch™ technology eliminates hot-switch audio pops on AES outputs following V1 buss
- Optional Embedded SoftSwitch™ technology eliminates hot-switch audio pops on embedded audio on V1 buss
- With embedded SoftSwitch™ option, SoftSwitch™ is performed on all 4 audio groups
- Switch line is fully controllable from the front panel
- Video input presence detection displayable on the front panel
- Front panel or remote control panel versions available
- Second control panel can be ordered for either version
- Parallel GPI and RS-232 serial control
- Programmable source input names available on the front panel
- Optional video and audio input relay bypass for power failure bypass protection
- Optional dual power supplies
- Field upgradeable firmware as new features become available

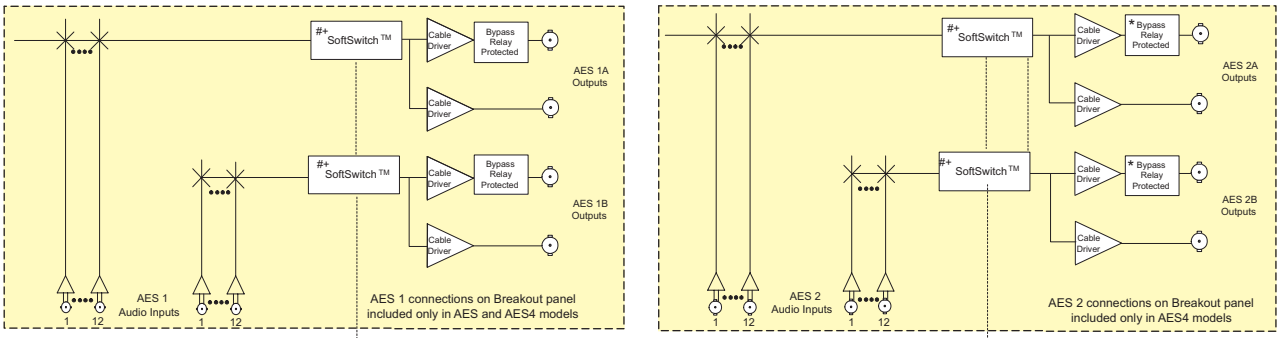

* Relay Bypass available with bypass option

\# Clean video switching and 'popless' AES switching available with SoftSwitch ™ version

\+ Clean video switching and 'popless' AES and embedded audio switching available with Embedded SoftSwitch™ version

Refer to www.evertz.com for more detailed information

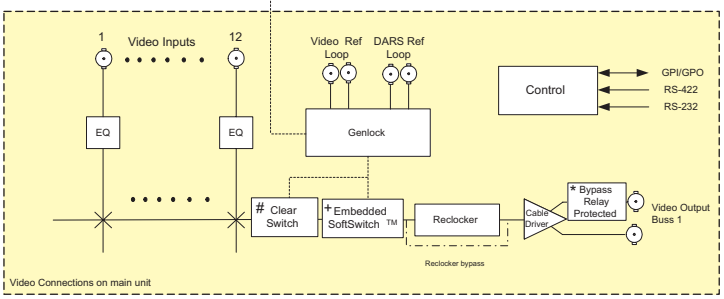

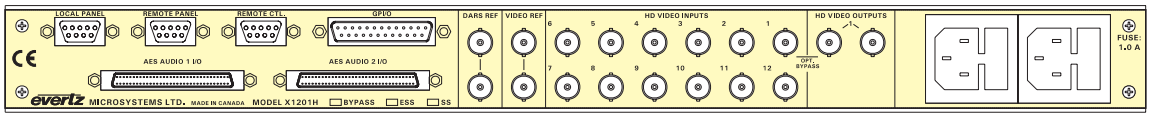

X1201 Audio AES Breakout Panel

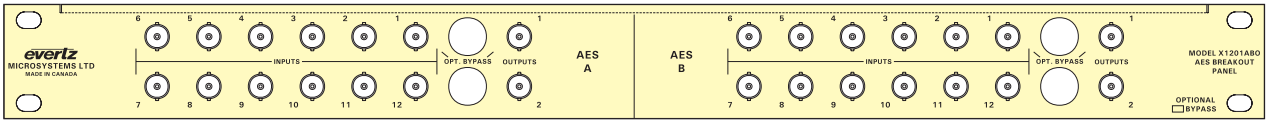

(Qty 1 with AES option, Qty 2 with AES4 option, Note: the bypass relay is optional)

Specifications

HD Video Inputs:

Standard:	SMPTE 292M (1.5Gb/s) SMPTE 259M with line synchronizer, reclocker and embedded SoftSwitch™ turned off
Number of Inputs:	12
Connector:	BNC per IEC 60169-8 Amendment 2
Equalization:	Automatic 100m @ 1.485Gb/s with Belden 1694A (or equivalent) (50m on input 1 with +HBP option)
Return Loss:	> 15dBV up to 1.5Gb/s
Input Timing (On +HSS and +HES Optioned Routers):	
Input Range:	Measured with respect to the Genlock reference ±1/2 line when Course phase = 1, Fine phase = 0 Auto timer for HD Video only

HD Video Outputs:

Standard:	Same as input
Number of Outputs:	2 per bus, 1 bus Input 1 bypass protected with +HBP option
Connector:	BNC per IEC 60169-8 Amendment 2
Signal Level:	800mV nominal
DC Offset:	0V ±0.5V
Rise and Fall Time:	200ps nominal
Overshoot:	< 10% of amplitude
Return Loss:	> 15dB up to 1Gb/s, > 12dB up to 1.5Gb/s
Jitter:	< 0.2 UI
Output Timing (On +HSS and +HES Optioned Routers):	
Output Phase:	Measured with respect to the Genlock reference Adjustable 1 line to a full frame of delay - set by Coarse phase parameter The active video content will align to the nearest line only Output phasing for HD Video only

AES Audio Inputs (AES & AES4 versions only) :

Standard:	
+B option:	AES3-2003 balanced
+U option:	SMPTE 276M single ended AES
Number of Inputs:	12 per bus, 2 or 4 busses optional
Connector (On breakout panel(s) provided):	
+B option:	Removable terminal strips
+U option:	BNC per IEC 60169-8 Amendment 2
Signal Level:	
+B option:	2-7V p-p ±10%
+U option:	1V p-p ±10%

AES Audio Outputs (AES & AES4 versions only) :

Standard:	Same as input
Number of Outputs:	2 per bus, 2 or 4 busses optional
Connector:	Same as input
Signal Level:	
+B option:	2V p-p nominal
+U option:	1V p-p nominal
Reference:	From Video Genlock Reference DARS reference available with +HSS or +HES options

Video Reference:

Type:	Menu selectable - depends on video format HD Tri-level Sync NTSC or PAL Color Black 1V p-p Composite Bi-level sync (525i/59.94 or 625i/50) 300 mV
Connectors:	2 BNC per IEC 60169-8 Amendment 2
Termination:	High impedance loop through

DARS Reference
(On +HSS and +HES Optioned Routers):

Type:	Digital Audio Signal with 48kHz sample rate
Standard:	SMPTE 276M single ended AES
Connector:	2 BNC per IEC 60169-8 Amendment 2
Termination:	High impedance loop through
Signal Level:	1V p-p
Freq. Lock Range:	±100ppm from nominal

GPI Control Port:

Number of Inputs:	14 opto-isolated, programmable functions
Number of Outputs:	4 sets of relay contacts, normally closed, programmable functions
Relay Max Rating:	1A at 30V DC

Serial Remote Control:

Standard:	RS-232 or RS422, programmable baud rate
Connector:	9-pin female "D"
Protocol:	GVG Ten XL ASCII, master or slave or remote control panel

Physical:

Height:	1.75" (45mm)
Width:	19" (483mm)
Depth:	18.75" (477mm)
Weight:	8lbs (3.5kg)

Electrical:

Voltage:	Auto ranging 100-240V AC 50/60Hz 40W
Fuse Rating:	250V, 1 amp time delay
Safety:	ETL Listed Complies with EU safety directives
EMI/RFI:	Complies with FCC Part 15 Class A EU EMC Directive

Ordering Information

X-1201H	12X1 HDTV video router
X-1201H-AES	12x1 HDTV video router with 2 (12x1) AES busses (includes 1 AES breakout panel)
X-1201H-AES4	12x1 HDTV video router with 4 (12x1) AES busses (includes 2 AES breakout panels)

Ordering Options

+HSS	SoftSwitch™ Option
+HES	Embedded SoftSwitch™ Option
+HBP	Bypass Relay Protection
+2PS	Redundant Power Supply
+RCP	Rack Mount Remote Control Panel (replaces front control panel)

(Must specify +B or +U version when ordering AES or AES4)

+B	Balanced AES Audio Breakout Panel
+U	Unbalanced AES Audio Breakout Panel

Accessories

X-1201H-PANEL	Additional Remote Control Panel(works in addition to front control panel)
X-1201ABO	Unbalanced AES Audio Breakout Panel (for all 1201 series routers)
X-1201ABOB	Balanced AES Audio Breakout Panel (for all 1201 series routers)
X-1201ABOB-BP	Balanced AES (with Bypass Relays) Audio Breakout Panels (for all 1201 series routers)
X-1201ABO-BP	Unbalanced AES (with Bypass Relays) Audio Breakout Panel (For all 1201 series routers)

X-1202H, X-1202H-AES, X-1202H-AES4

12x2 HDTV Router with Dual or Quad 12x2 AES Audio

The X-1202H HDTV twelve input video router provides a convenient, low cost way to route standard and high definition serial digital signals. The X-1202H routers are used for 1.5Gb/s HDTV serial digital signals. It features redundancy protection by providing optional dual power supply and relay bypass options. When the unit is ordered with the Dual 12x2 AES router or Quad 12x2 AES router options the AES output busses can be used in an "audio follow video" mode, or can be broken away from the video buss. The routers feature redundancy protection by providing dual power supply and bypass relay options.

The router electronics are housed in a 1RU rackmount frame and controlled from the built-in front panel controls. Each model can also be purchased with an optional rack mounted remote control panel that replaces the built-in control panel or can be used as a second control panel. All units can also be controlled by contact closures on the GPI control port or through the RS-232 or RS-422 serial remote control port using industry standard switcher protocols.

Optional SoftSwitch™ Features (+HSS Option)

Routers equipped SoftSwitch™ option have the following additional features. The Video 1 output has adjustable vertical timing with respect to the genlock input, and line synchronizers on the video inputs can accommodate differences in timing up to approximately ± one half line providing clean video switches on the V1 output (for HD Video only). All the AES outputs will have a continuous AES carrier locked to either the video genlock or DARS reference (when the DARS reference is used, Z bit alignment of the AES outputs is also guaranteed). The AES outputs that follow the Video 1 buss use Evertz patent pending SoftSwitch™ technology to eliminate audible pops when switches are performed on synchronous audio sources.

Optional Embedded SoftSwitch™ Features (+HES Option)

Routers equipped with the Embedded SoftSwitch™ option have all the features of the SoftSwitch™ versions as well as the following additional features. The embedded audio on the Video 1 buss uses Evertz patent pending SoftSwitch™ technology to eliminate audible pops when switches are performed. Embedded SoftSwitch™ is performed on all 4 audio groups.

Features & Benefits

- Supports SMPTE 292M (1.5Gb/s) video signals
- Can be operated in a non-reclock mode to pass SMPTE 259M video signals
- Units can be genlocked to an external source so that a "clean switch" can be achieved.
- Autotiming of V1 buss inputs to perform a clean video switch when SoftSwitch™ or Embedded SoftSwitch™ option is installed
- Optional SoftSwitch™ technology eliminates hot-switch audio pops on AES outputs following V1 buss
- Optional Embedded SoftSwitch™ technology eliminates hot- switch audio pops on embedded audio on V1 buss
- With embedded SoftSwitch™ option, SoftSwitch™ is performed on all 4 audio groups
- Switch line is fully controllable from the front panel
- Video input presence detection displayable on the front panel
- Front panel or remote control panel versions available
- Second control panel can be ordered for either version
- Parallel GPI and RS-232 serial control
- Programmable source input names available on the front panel
- Optional video and audio input relay bypass for power failure bypass protection
- Optional dual power supplies
- Field upgradeable firmware as new features become available

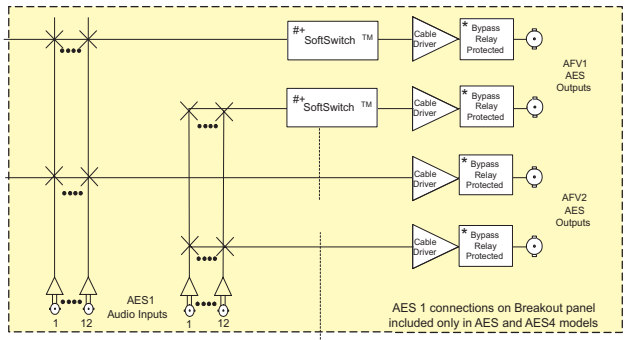

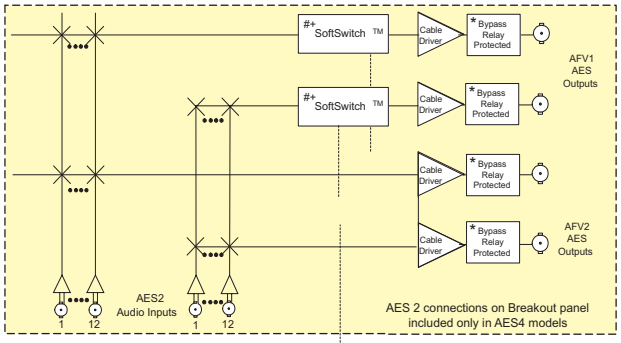

* Relay Bypass available with bypass option

\# Clean video switching and 'popless' AES switching available with SoftSwitch ™ version

\+ Clean video switching and 'popless' AES and embedded audio switching available with Embedded SoftSwitch™ version

Refer to www.evertz.com for more detailed information

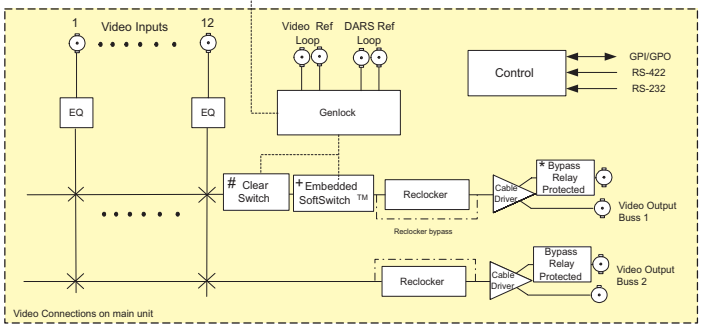

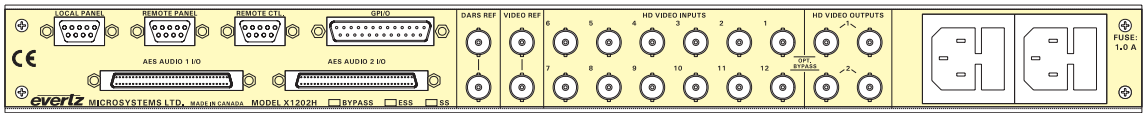

X1202 Audio AES Breakout Panel

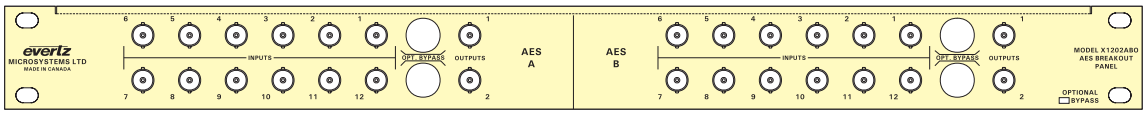

(Qty 1 with AES option, Qty 2 with AES4 option, Note: the bypass relay is optional)

Specifications

HD Video Inputs:

Standard:	SMPTE 292M (1.5Gb/s) SMPTE 259M with line synchronizer, reclocker and embedded SoftSwitch™ turned off
Number of Inputs:	12
Connector:	BNC per IEC 60169-8 Amendment 2
Equalization:	Automatic 100m @ 1.485Gb/s with Belden 1694A (or equivalent) (50m on inputs 1 and 12 with +HPB option)
Return Loss:	> 15dB up to 1.5Gb/s
Input Timing (On +HSS and +HES Optioned Routers):	
Input Range:	Measured with respect to the Genlock reference ±1/2 line when Course phase = 1, Fine phase = 0 Auto timer for HD Video only

HD Video Outputs:

Standard:	Same as input
Number of Outputs:	2 per buss, 2 busses Inputs 1 & 12 bypass protected with +HBP option
Connector:	BNC per IEC 60169-8 Amendment 2
Signal Level:	800mV nominal
DC Offset:	0V ±0.5V
Rise and Fall Time:	200ps nominal
Overshoot:	< 10% of amplitude
Return Loss:	> 15dB up to 1Gb/s, > 12dB up to 1.5Gb/s
Jitter:	< 0. 2UI
Output Timing (On +HSS and +HES Optioned Routers)	
Output Phase:	Measured with respect to the Genlock reference Adjustable 1 line to a full frame of delay - set by Coarse phase parameter. The active video content will align to the nearest line only Output phasing for HD Video only

AES Audio Inputs (AES & AES4 versions only):

Standard:	
+B option:	AES3-2003 balanced
+U option:	SMPTE 276M single ended AES
Number of Inputs:	12 per buss, 2 or 4 busses optional
Connector (On breakout panel(s) provided):	
+B option:	Removable terminal strips
+U option:	BNC per IEC 60169-8 Amendment 2
Signal Level:	
+B option:	2-7V p-p ±10%
+U option:	1V p-p ±10%

AES Audio Outputs (AES & AES4 versions only):

Standard:	Same as input
Number of Outputs:	2 per buss, 2 or 4 busses optional
Connector:	Same as input
Signal Level:	
+B option:	2V p-p nominal
+U option:	1V p-p nominal
Reference:	From Video Genlock Reference DARS reference available with +HSS or +HES options

Video Reference:

Type:	Menu selectable - depends on video format HD Tri-level Sync NTSC or PAL Color Black 1V p-p Composite Bi-level sync (525i/59.94 or 625i/50) 300 mV
Connectors:	2 BNC per IEC 60169-8 Amendment 2
Termination:	High impedance loop through

DARS Reference (On +HSS and +HES Optioned Routers):

Type:	Digital Audio Signal with 48kHz sample rate
Standard:	SMPTE 276M single ended AES
Connector:	2 BNC per IEC 60169-8 Amendment 2
Termination:	High impedance loop through
Signal Level:	1V p-p
Freq. Lock Range:	±100ppm from nominal

GPI Control Port:

Number of Inputs:	14 opto-isolated, programmable functions
Number of Outputs:	4 sets of relay contacts, normally closed, programmable functions
Relay Max Rating:	1A at 30V DC

Serial Remote Control:

Standard:	RS-232 or RS422, programmable baud rate
Connector:	9-pin female "D"
Protocol:	GVG Ten XL ASCII, master or slave or remote control panel

Physical:

Height:	1.75" (45mm)
Width:	19" (483mm)
Depth:	18.75" (477mm)
Weight:	8lbs (3.5kg)

Electrical:

Voltage:	Auto ranging 100-240V AC 50/60Hz 40W
Fuse Rating:	250 V, 1 amp time delay
Safety:	ETL Listed Complies with EU safety directives
EMI/RFI:	Complies with FCC Part 15 Class A EU EMC Directive

Ordering Information

X-1202H	12X2 HDTV video router
X-1202H-AES	12x2 HDTV video router with 2 (12x2) AES busses (includes 1 AES breakout panel)
X-1202H-AES4	12x2 HDTV video router with 4 (12x2) AES busses (includes 2 AES breakout panels)

Ordering Options

+HSS	SoftSwitch™ Option
+HES	Embedded SoftSwitch™ Option
+HBP	Bypass Relay Protection
+2PS	Redundant Power Supply
+RCP	Rack Mount Remote Control Panel (replaces front control panel)

(Must specify +B or +U version when ordering AES or AES4)

+B	Balanced AES Audio Breakout Panel
+U	Unbalanced AES Audio Breakout Panel

Accessories

X-1202H-PANEL	Additional Remote Control Panel (works in addition to front control panel)
X-1202ABO	Unbalanced AES Audio Breakout Panel (for all 1202 series routers)
X-1202ABOB	Balanced AES Audio Breakout Panel (for all 1202 series routers)
X-1202ABOB-BP	Balanced AES (with Bypass Relays) Audio Breakout Panels (for all 1202 series routers)
X-1202ABO-BP	Unbalanced AES (with Bypass Relays) Audio Breakout Panel (for all 1202 series routers)

X-0401S

4x1 SDI Router with Quad AES Audio

The X-0401S SDTV four input routing switcher provides a convenient, low cost way to route standard definition serial digital signals. The X-0401S router is used for 270, 360, 540Mb/s and DVB-ASI serial digital signals. The unit can also be used for SMPTE 310M (19.4Mb/s) signals with the reclocker turned off. When the unit is ordered with the Quad 4x1 AES router options the AES output busses can be used in an "audio follow video" mode, or can be broken away from the video buss. The routers feature redundancy protection by providing dual power supply and bypass relay options.

The router electronics are housed in a 1RU rackmount frame and controlled from the built-in front panel controls. Each model can also be purchased with an optional rack mount remote control panel that replaces the built-in control panel or can be used as a second control panel. All units can also be controlled by contact closures on the GPI control port or through the RS-232 or RS-422 serial remote control port using industry standard switcher protocols.

SoftSwitch™ Features (X-0401S-AES4-SS)

Routers equipped with SoftSwitch™ have the following additional features. The video output has adjustable vertical timing with respect to the genlock input, and line synchronizers on the video inputs can accommodate differences in timing up to approximately ± one half line providing clean video switches on the video output. All the AES outputs will have a continuous AES carrier locked to either the video genlock or DARS reference (when the DARS reference is used, Z bit alignment of the AES outputs is also guaranteed). The AES outputs use Evertz patent pending SoftSwitch™ technology to eliminate audible pops when switches are performed on synchronous audio sources.

Features & Benefits

- Supports SMPTE 259M (270Mb/s, 360Mb/s, 540Mb/s) or DVB-ASI video signals
- Units support SMPTE 310M (19.4Mb/s) with reclocker turned off
- Units can be genlocked to an external source so that a "clean switch" can be achieved
- SoftSwitch™ equipped models elimiate hot-switch audio pop on AES outputs
- Auto timing of video inputs to perform a clean video switch on SoftSwitch™ & Embedded SoftSwitch™ versions
- Embedded SoftSwitch™ equipped versions elimiate hot-switch audio pops on embedded audio (all 4 audio groups)
- Switch point is fully controllable from the front panel
- Video input presence detection displayable on the front panel
- Front panel or Remote control panel versions available
- Second control panel can be ordered for either version
- Programmable source input names available on the front panel
- Programmable parallel GPI control and tallies.
- Serial remote control via GVG TEN-XL protocol (master or slave)
- Field upgradeable firmware as new features become available
- Optional video and audio input relay bypass for power failure bypass protection (Bypass verification test from front panel menu)
- Optional dual power supplies

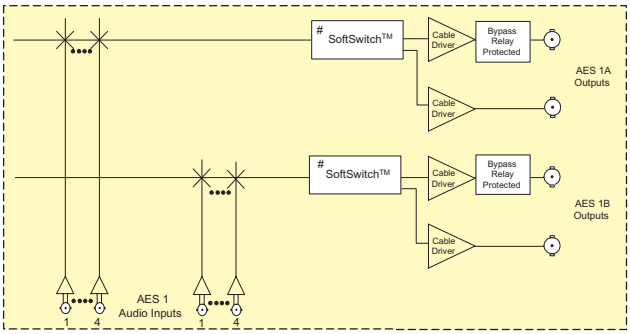

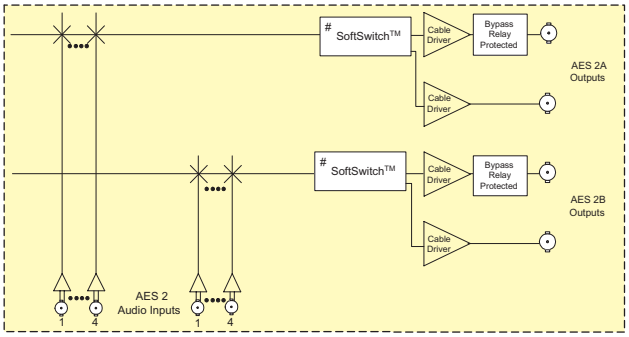

* Relay Bypass available with bypass option

\# Clean video switching and 'popless' AES switching available with Softswitch™ and Embedded Softswitch™ options

Refer to www.evertz.com for more detailed information

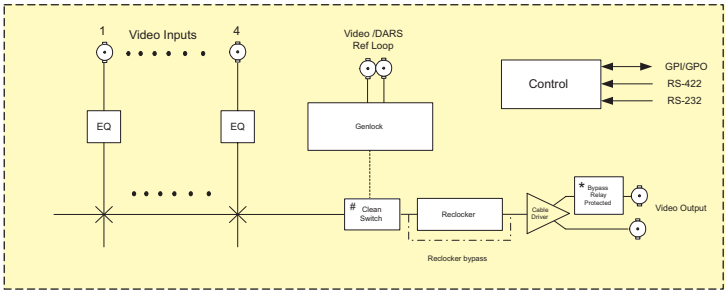

X-0401S-AES4 Rear Panel

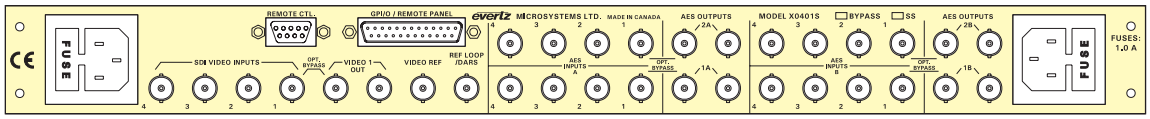

Specifications

SD Video Inputs:
Standard:
SMPTE Mode: SMPTE 259M (270Mb/s, 360Mb/s, 540Mb/s) and DVB-ASI
ATSC Mode: SMPTE 310M with reclocker turned off
Number of Inputs: 4
Connector: BNC per IEC 60169-8 Amendment 2
Equalization: Automatic up to 250m @ 270Mb/s with Belden 8281 (or equivalent) cable
Return Loss: > 15dB up to 540Mb/s
Input Timing
(On X-0401S-AES4-SS Routers)
Input Range: Measured with respect to the Genlock reference
±1/2 line when Course phase = 1, Fine phase = 0

SD Video Outputs:
Standard: Same as Input
Number of Outputs: 2 per buss, 1 buss
Input 1 bypass protected with +BP option
Connector: BNC per IEC 60169-8 Amendment 2
Signal Level: 800mV nominal
DC Offset: 0V ±0.5V
Rise and Fall Time: 950ps nominal
Overshoot: < 10% of amplitude
Return Loss: > 15 dB up to 540Mb/s
Jitter: < 0.2UI
Output Timing
(On X0401S-AES4-SS Routers)
Output Phase: Measured with respect to the Genlock reference
Adjustable 1 line to a full frame of delay - set by Coarse phase parameter. The active video content will align to the nearest line

AES Audio Inputs (AES4 versions only):
Standards: SMPTE 276M single ended AES
Number of Inputs: 4 per buss, 4 busses
Connector: BNC per IEC 60169-8 Amendment 2
Signal Level: 1V p-p ±10%

AES Audio Outputs (AES4 versions only):
Standards: SMPTE 276M single ended AES
Number of Outputs: 2 per buss, 4 busses
Input 1 bypass protected with +BP option
Connector: BNC per IEC 60169-8 Amendment 2
Signal Level: 1V p-p
Reference: From Video Reference
On SoftSwitch™ model, menu selectable to Video or DARS

Video Reference:
Type: Menu selectable - depends on video format
NTSC or PAL Color Black 1V p-p
Composite Bi-level sync (525i/59.94 or 625i/50) 300mV
Connectors: 2 BNC per IEC 60169-8 Amendment 2
Termination
Standard models: High impedance loop through
SoftSwitch™ model: High impedance loop through or non-looping or 75Ω non-looping (jumper selectable)

DARS Reference
(On X0401S-AES4-SS & X-0401S-AES4-ES Routers):
DARS reference requires jumper configuration inside the router
Type: Digital Audio Signal with 48khz sample rate.
Standard: SMPTE 276M single ended AES
Connector: BNC per IEC 60169-8 Amendment 2
Termination: Inactive or High impedance non-looping or 75Ω non looping (jumper selectable)
Signal Level: 1V p-p
Freq. Lock Range: ±100ppm from nominal

GPI Control Port:
Number of Inputs: 8 opto-isolated, programmable functions
Number of Outputs: 4 sets of relay contacts, normally closed, programmable functions
Relay Max Rating: 1A at 30V DC

Serial Remote Control:
Standard: RS-232 or RS-422, programmable baud rate
Connector: 9-pin female "D"
Protocol: GVG Ten XL ASCII, master or slave or remote control panel

Remote Control Panel Port:
Standard: RS-422, 9,600 baud rate
Connector: 6 pins on GPIO 25-pin female "D"
Protocol: Remote Control Panel

Physical:
Height: 1.75" (45mm)
Width: 19" (483mm)
Depth: 7.75" (196mm)
Weight: 8lb. (3.5kg)

Electrical:
Voltage: Auto ranging 100-240V AC, 50/60Hz 40W
Fuse Rating: 250V, 1 amp time delay
Safety: ETL Listed, complies with EU safety directives
EMI/RFI: Complies with FCC Part 15 Class A regulations
Complies with EU EMC Directive

Ordering Information

X-0401S	4x1 SDI video router
X-0401S-AES4	4x1 SDI video router with 4 (4x1) AES busses
X-0401S-AES4-SS	4x1 SDI video router with 4 (4x1) AES busses and SoftSwitch™
X-0401S-ATSC	4x1 SDI video router with 4 (4x1) AES busses (reclocked)

Ordering Options

+BP	Optional bypass relay
+2PS	Redundant power supply
+RCP	Rackmount remote control panel (replaces front control panel)

Accessories

X-0401S-PANEL	Additional Remote Control Panel (works in addition to front control panel)

X-1201S, X-1201S-AES, X-1201S-AES4

12x1 SDI Router with Dual or Quad 12x1 AES Audio

The X-1201S SDTV twelve input routing switcher provides a convenient, low cost way to route standard definition serial digital signals. The X-1201S routers are used for 270, 360, 540Mb/s and DVB-ASI serial digital signals. When the unit is ordered with the Dual 12x1 AES router or Quad 12x1 AES router options the AES output busses can be used in an "audio follow video" mode, or can be broken away from the video buss. The routers feature redundancy protection by providing dual power supply and bypass relay options.

The router electronics are housed in a 1RU rackmount frame and is controlled from the built-in front panel controls. Each model can also be purchased with an optional rack mount remote control panel that replaces the built-in control panel or can be used as a second control panel. All units can also be controlled by contact closures on the GPI control port or through the RS-232 or RS-422 serial remote control port using industry standard switcher protocols.

Optional SoftSwitch™ Features (+SS Option)
Routers equipped with the SoftSwitch™ option have the following additional features. The video output has adjustable vertical timing with respect to the genlock input, and line synchronizers on the video inputs can accommodate differences in timing up to approximately ± one half line providing clean video switches on the video output . All the AES outputs will have a continuous AES carrier locked to either the video genlock or DARS reference (when the DARS reference is used, Z bit alignment of the AES outputs is also guaranteed). The AES outputs use Evertz patent pending SoftSwitch™ technology to eliminate audible pops when switches are performed on synchronous audio sources.

Optional Embedded SoftSwitch™ Features (+ES Option)
Routers equipped with the Embedded SoftSwitch™ option have all the features of the SoftSwitch™ versions as well as the following additional features. The embedded audio on the Video 1 buss uses Evertz patent pending SoftSwitch™ technology to eliminate audible pops when switches are performed. Embedded SoftSwitch™ is performed on all 4 audio groups.

Features & Benefits

- Supports SMPTE 259M (270Mb/s, 360Mb/s, 540Mb/s) video signals
- Units can be genlocked to an external source so that a "clean switch" can be achieved
- Autotiming of V1 buss inputs to perform a clean video switch when SoftSwitch™ or Embedded SoftSwitch™ option is installed
- Optional SoftSwitch™ technology eliminates hot-switch audio pops on AES outputs following V1 buss
- Optional Embedded SoftSwitch™ technology eliminates hot-switch audio pops on embedded audio on V1 buss
- With embedded SoftSwitch™ option, SoftSwitch™ is performed on all 4 audio groups
- Switch line is fully controllable from the front panel
- Video input presence detection displayable on the front panel
- Front panel or remote control panel versions available. Second control panel can be ordered for either version
- Parallel GPI and RS-232 serial control
- Programmable source input names available on the front panel
- Optional video and audio input relay bypass for power failure bypass protection
- Optional dual power supplies.
- Field upgradeable firmware as new features become available

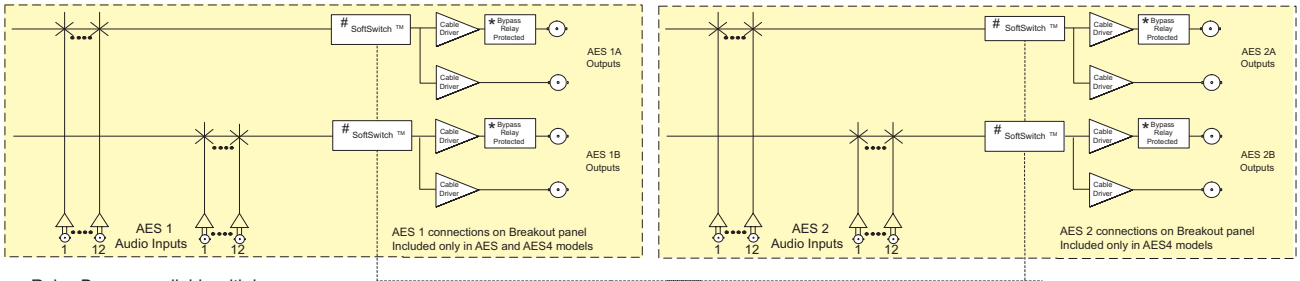

* Relay Bypass available with bypass option

\# Clean video switching and 'popless' AES switching available with SoftSwitch ™ version

\+ Clean video switching and 'popless' AES and embedded audio switching available with Embedded SoftSwitch™ version

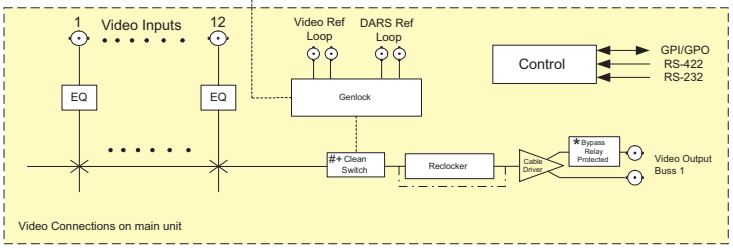

Refer to www.evertz.com for more detailed information

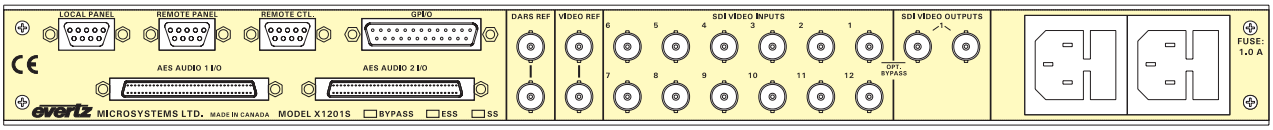

X1201 Audio AES Breakout Panel

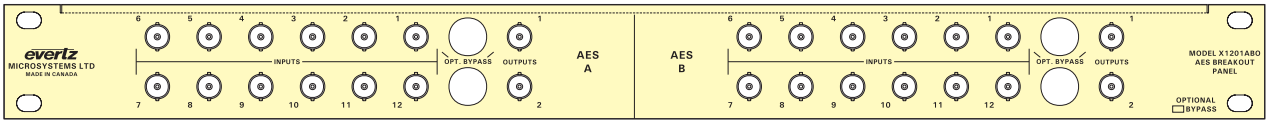

(Qty 1 with AES option, Qty 2 with AES4 option, Note: the bypass relay is optional)

Specifications

SDI Video Inputs:

Standard:	SMPTE 259M (270Mb/s, 360Mb/s, 540Mb/s) and DVB-ASI
Number of Inputs:	12
Connector:	BNC per IEC 60169-8 Amendment 2
Equalization:	Automatic up to 250m @ 270Mb/s with Belden 8281 (or equivalent) cable
Return Loss:	> 15 dB up to 540Mb/s
Input Timing (On +SS and +ES Optioned Routers)	
Input Range:	Measured with respect to the Genlock reference ±1/2 line when *Course phase = 1, Fine phase = 0*

SDI Video Outputs:

Standard:	Same as Input
Number of Outputs:	2 per buss, 1 buss Input 1 bypass protected with +BP option
Connector:	BNC per IEC 60169-8 Amendment 2
Signal Level:	800mV nominal
DC Offset:	0V ±0.5V
Rise and Fall Time:	200ps nominal
Overshoot:	<10% of amplitude
Return Loss:	> 15 dB up to 540Mb/s
Jitter:	< 0.2 UI
Output Timing (On +SS and +ES Optioned Routers)	
Output Phase:	Measured with respect to the Genlock reference Adjustable 1 line to a full frame of delay - set by *Coarse phase* parameter. The active video content will align to the nearest line only

AES Audio Inputs (AES & AES4 versions only):

Standard:	
+B option:	AES3-2003 balanced
+U option:	SMPTE 276M single ended AES
Number of Inputs:	12 per buss, 2 or 4 busses optional
Connector (On breakout panel(s) provided):	
+B	Removable terminal strips
+U	BNC per IEC 60169-8 Amendment 2
Signal Level:	
+B	2-7V p-p ± 10%
+U	1V p-p ± 10%

AES Audio Outputs (AES & AES4 versions only):

Standard:	Same as input
Number of Outputs:	2 per buss, 2 or 4 busses optional
Connector:	Same as input
Signal Level:	
+B	2V p-p nominal
+U	1V p-p nominal
Reference:	From Video Genlock Reference DARS reference available with +SS or +ES options

Video Reference:

Type:	Menu selectable - depends on video format NTSC or PAL Color Black 1 V p-p Composite Bi-level sync (525i/59.94 or 625i/50) 300 mV
Connectors:	2 BNC per IEC 60169-8 Amendment 2
Termination:	High impedance loop through

DARS Reference (On +SS and +ES Optioned Routers):

Type:	Digital Audio Signal with 48kHz sample rate
Standard:	SMPTE 276M single ended AES
Connector:	2 BNC per IEC 60169-8 Amendment 2
Termination:	High impedance loop through
Signal Level:	1V p-p
Freq. Lock Range:	± 100ppm from nominal

GPI Control Port:

Number of Inputs:	14 opto-isolated, programmable functions
Number of Outputs:	4 sets of relay contacts, normally closed, programmable functions
Relay Max Rating :	1A at 30VDC

Serial Remote Control:

Standard:	RS-232 or RS422, programmable baud rate
Connector:	9 pin female "D"
Protocol:	GVG Ten XL ASCII, master or slave or remote control panel

Physical:

Dimensions:	19"W x 1.75"H x 18.75"D (483mm W x 45mm H x 477mm D)
Weight:	8 lbs. (3.5Kg)

Electrical:

Voltage:	Auto ranging 100-240VAC 50/60 Hz 40 Watts
Fuse Rating:	250 V, 1 amp time delay
Safety:	ETL Listed Complies with EU safety directives
EMI/RFI:	Complies with FCC Part 15 Class A EU EMC Directive

Ordering Information

X-1201S	12X1 SDI video router
X-1201S-AES	12x1 SDI video router with 2(12x1) AES busses (includes 1 AES breakout panel)
X-1201S-AES4	12x1 SDI video router with 4(12x1) AES busses (includes 2 AES breakout panels)

Ordering Options

+SS	SoftSwitch™ Option
+ES	Embedded SoftSwitch™ Option
+BP	Bypass Relay Protection
+2PS	Redundant Power Supply
+RCP	Rack Mount Remote Control Panel (replaces front control panel)

Must specify +B or +U version when ordering AES or AES4

+B	Balanced AES Audio Breakout Panel
+U	Unbalanced AES Audio Breakout Panel

Accessories

X-1201S-PANEL	Additional Remote Control Panel(works in addition to front control panel)
X-1201ABO	Unbalanced AES Audio Breakout Panel (for all 1201 series routers)
X-1201ABOB	Balanced AES Audio Breakout Panel (for all 1201 series routers)
X-1201ABOB-BP	Balanced AES (with Bypass Relays) Audio Breakout Panels (for all 1201 series routers)
X-1201ABO-BP	Unbalanced AES (with Bypass Relays) Audio Breakout Panel (For all 1201 series routers)

X-1202S, X-1202S-AES, X-1202S-AES4

12x2 SDI Router wit Dual or Quad 12x2 AES Audio

The X-1202S SDTV twelve input routing switcher provides a convenient, low cost way to route standard definition serial digital signals. The X-1202S routers are used for 270, 360, 540Mb/s and DVB-ASI serial digital signals. When the unit is ordered with the Dual 12x2 AES router or Quad 12x2 AES router options the AES output busses can be used in an “audio follow video” mode, or can be broken away from the video buss. It features redundancy protection by providing dual power supply and bypass relay options.

The router electronics are housed in a 1RU rackmount frame and controlled from the built-in front panel controls. Each model can also be purchased with an optional rack mount remote control panel that replaces the built-in control panel or can be used as a second control panel. All units can also be controlled by contact closures on the GPI control port or through the RS-232 or RS-422 serial remote control port using industry standard switcher protocols.

Optional SoftSwitch™ Features (+SS Option)
Routers equipped with the SoftSwitch™ option have the following additional features. The Video 1 output has adjustable vertical timing with respect to the genlock input, and line synchronizers on the video inputs can accommodate differences in timing up to approximately ± one half line providing clean video switches on the V1 output. All the AES outputs will have a continuous AES carrier locked to either the video genlock or DARS reference (when the DARS reference is used, Z bit alignment of the AES outputs is also guaranteed). The AES outputs that follow the Video 1 buss use Evertz patent pending SoftSwitch™ technology to eliminate audible pops when switches are performed on synchronous audio sources.

Optional Embedded SoftSwitch™ Features (+ES Option)
Routers equipped with the Embedded SoftSwitch™ option have all the features of the SoftSwitch™ versions as well as the following additional features. The embedded audio on the Video 1 buss uses Evertz patent pending SoftSwitch™ technology to eliminate audible pops when switches are performed. Embedded SoftSwitch™ is performed on all 4 audio groups.

Features & Benefits

- Supports SMPTE 259M (270Mb/s, 360Mb/s, 540Mb/s) video signals
- Units can be genlocked to an external source so that a "clean switch" can be achieved
- Autotiming of V1 buss inputs to perform a clean video switch when SoftSwitch™ or Embedded SoftSwitch™ option is installed
- Optional SoftSwitch™ technology eliminates hot-switch audio pops on AES outputs following V1 buss
- Optional Embedded SoftSwitch™ technology eliminates hot-switch audio pops on embedded audio on V1 buss
- With embedded SoftSwitch™ option, SoftSwitch™ is performed on all 4 audio groups
- Switch line is fully controllable from the front panel
- Video input presence detection displayable on the front panel
- Front panel or remote control panel versions available
- Second control panel can be ordered for either version
- Parallel GPI and RS-232 serial control
- Programmable source input names available on the front panel
- Optional video and audio input relay bypass for power failure bypass protection
- Optional dual power supplies
- Field upgradeable firmware as new features become available

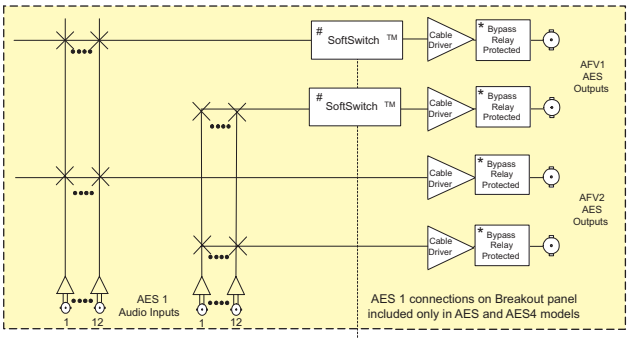

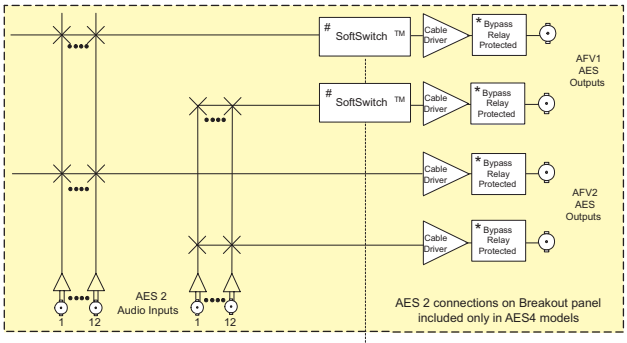

* Relay Bypass available with bypass option

\# Clean video switching and 'popless' AES switching available with SoftSwitch ™ version

\+ Clean video switching and 'popless' AES and embedded audio switching available with Embedded SoftSwitch™ version

Refer to www.evertz.com for more detailed information

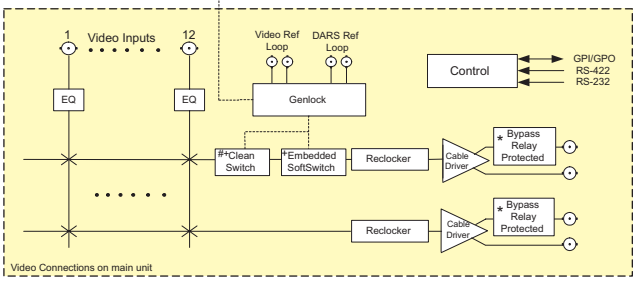

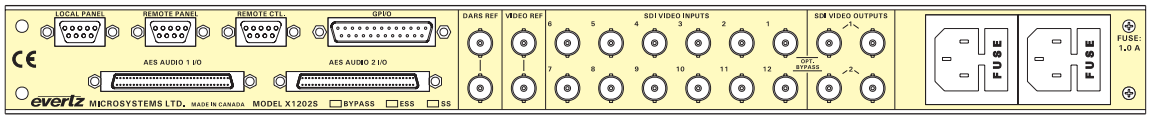

X1202 Audio AES Breakout Panel

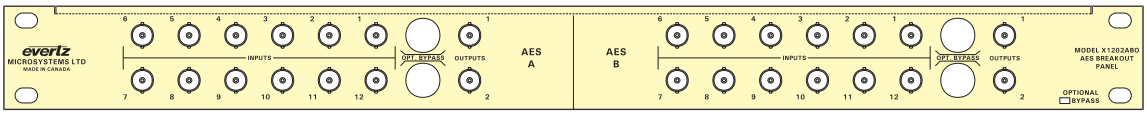

(Qty 1 with AES option, Qty 2 with AES4 option, Note: the bypass relay is optional)

Specifications

SDI Video Inputs:

Standard:	SMPTE 259M (270Mb/s, 360Mb/s, 540Mb/s) and DVB-ASI
Number of Inputs:	12
Connector:	BNC per IEC 60169-8 Amendment 2
Equalization:	Automatic up to 250m @ 270Mb/s with Belden 8281 (or equivalent)
Return Loss:	> 15dB up to 540Mb/s
Input Timing (On +SS and +ES Optioned Routers)	
Input Range:	Measured with respect to the Genlock reference ±1/2 line when Course phase = 1, Fine phase = 0

SDI Video Outputs

Standard:	Same as Input
Number of Outputs:	2 per buss, 2 busses Inputs 1 & 12 bypass protected with +BP option
Connector:	BNC per IEC 60169-8 Amendment 2
Signal Level:	800mV nominal
DC Offset:	0V ±0.5V
Rise and Fall Time:	200ps nominal
Overshoot:	< 10% of amplitude
Return Loss:	> 15dB up to 540Mb/s
Jitter:	< 0.2 UI
Output Timing (On +SS and +ES Optioned Routers)	
Output Phase:	Measured with respect to the Genlock reference Adjustable 1 line to a full frame of delay - set by Coarse phase parameter. The active video content will align to the nearest line only

AES Audio Inputs (AES & AES4 versions only):

Standard:	
+B option:	AES3-2003 balanced
+U option:	SMPTE 276M single ended AES
Number of Inputs:	12 per buss, 2 or 4 busses optional
Connector (On breakout panel(s) provided):	
+B option:	Removable terminal strips
+U option:	BNC per IEC 60169-8 Amendment 2
Signal Level:	
+B option:	2-7V p-p ±10%
+U option:	1V p-p ±10%

AES Audio Outputs (AES & AES4 versions only):

Standard:	Same as input
Number of Outputs:	2 per buss, 2 or 4 busses optional
Connector:	Same as input
Signal Level:	
+B option:	2V p-p nominal
+U option:	1V p-p nominal
Reference:	From Video General Reference DARS reference available with +HSS or +HES options
Video Reference:	
Type:	Menu selectable - depends on video format NTSC or PAL Color Black 1V p-p Composite Bi-level sync (525i/59.94 or 625i/50) 300mV
Connectors:	2 BNC per IEC 60169-8 Amendment 2
Termination:	High impedance loop through

DARS Reference (On +SS and +ES Optioned Routers):

Type:	Digital Audio Signal with 48kHz sample rate
Standard:	SMPTE 276M
Termination:	High impedance loop through
Connector:	2 BNC per IEC 60169-8 Amendment 2
Signal Level:	1V p-p
Freq. Lock Range:	±100ppm from nominal

GPI Control Port

Number of Inputs:	14 opto-isolated, programmable functions
Number of Outputs:	4 sets of relay contacts, normally closed, programmable functions
Relay Max Rating:	1A at 30V DC

Serial Remote Control

Standard:	RS-232 or RS422, programmable baud rate
Connector:	9-pin female "D"
Protocol:	GVG Ten XL ASCII, master or slave or remote control panel

Physical

Height:	1.75" (45mm)
Width:	19" (483mm)
Depth:	18.75" (477mm)
Weight:	8lbs (3.5kg)

Electrical

Voltage:	Auto ranging 100-240VAC 50/60Hz 40W
Fuse Rating:	250V, 1 amp time delay
Safety:	ETL Listed Complies with EU safety directives
EMI/RFI:	Complies with FCC Part 15 Class A EU EMC Directive

Ordering Information

X-1202S	12x2 SDI video router
X-1202S-AES	12x2 SDI video router with 2(12x2) AES busses (includes 1 AES breakout panel)
X-1202S-AES4	12x2 SDI video router with 4(12x2) AES busses (includes 2 AES breakout panels)

Ordering Options

+SS	SoftSwitch™ Option
+ES	Embedded SoftSwitch™ Option
+BP	Bypass Relay Protection
+2PS	Redundant Power Supply
+RCP	Rack Mount Remote Control Panel (replaces front control panel)

Must specify +B or +U version when ordering AES or AES4

+B	Balanced AES Audio Breakout Panel
+U	Unbalanced AES Audio Breakout Panel

Accessories

X-1202H-PANEL	Additional Remote Control Panel(works in addition to front control panel)
X-1202ABO	Unbalanced AES Audio Breakout Panel (for all 1202 series routers)
X-1202ABOB	Balanced AES Audio Breakout Panel (for all 1202 series routers)
X-1202ABOB-BP	Balanced AES (with Bypass Relays) Audio Breakout Panels (for all 1202 series routers)
X-1202ABO-BP	Unbalanced AES (with Bypass Relays) Audio Breakout Panel (For all 1202 series routers)

X-NCP2

Router Control Panel

The X-NCP2 provides real-time control and configuration of Evertz XRF Series RF routers and X Series optical routers, providing access to control and configuration parameters.

Connected to the router via Ethernet, multiple control panels may reside on a single network, allowing panels to be located throughout the facility. The unit includes two 4-line displays, a direct-entry 0-9 keypad, and four rotary shaft encoders for user-friendly operation.

Features & Benefits

- Provides crosspoint and configuration control for the Evertz XRF series RF Routers and X series optical routers
- Two 4-line, 24 alphanumeric digit per line, vacuum fluorescent display, (VFD) featuring very high brightness and wide viewing angles
- Panel pushbuttons are illuminated, tactile and full-size
- Provides destination locks and passcode protection
- Low power and rack space requirements (2RU)

Ethernet Input/Output:

Standard:	IEEE 802.3 (10BaseT), IEEE 8002.3u (100BaseTx)
Connector:	1 RJ45

Serial I/O :

Standard:	RS-232/RS-422
Connector:	Female DB9
Baud Rate:	57,600
Format:	8 bits, no parity, 2 stop bits, no hardware flow

Physical:

Height:	3.5” (89mm)
Width:	19” (483mm)
Depth:	4.375” (111mm)
Weight:	3lbs (1.36kg)
Temperature:	0 to 50°C (Operating)

Electrical:

Voltage:	Auto ranging 100 to 240VAC +12VDC
Power:	11W
Connector:	2.5mm DC power jack
Safety:	Power adapter CSA Listed Complies with CE low voltage directive 93/68/EEC
EMC:	Complies with FCC Part 15, Class A EU EMC Directive 89/336/EEC

Ordering Information: X-NCP2 - 2RU Router Control Panel

This page left intentionally blank

Q1601, Q1602 & Q0802

HD or SD Video & Audio Routers

The Q1601, Q1602 and Q0802 are compact broadcast quality monitoring routers for high definition, standard definition or analog video applications.

The design can also incorporate a digital or analog audio layer within the same frame.

Features & Benefits

Configuration
The 1RU frame is available with 8 (HD only) or 16 inputs and 1 or 2 outputs. It can be configured to accommodate single, mixed video or audio formats in the following configurations:

Single formats:
• High Definition Video (with embedded audio)
• Standard Definition Video (with embedded audio)
• Analog Video

Mixed formats:
• High definition video and four channel digital audio
• High definition video and stereo analog audio
• Standard definition video and four channel digital audio
• Standard definition video and stereo analog audio
• Analog video and four channel digital audio
• Analog video and stereo analog audio
Note: The analog video module is also suitable for routing unbalanced digital audio signals.

Control
There are a number of control options for the monitoring routers:

Local Control Panels: The CP-1600A-LP or the CP-1601A-LP local panel can be fitted to the front of the router.
Note: The CP-1600A-LP is the only local panel that can be fitted to a Monitoring router which has the optional Frame Controller module fitted. The FU-0003 must be removed when any other local or passive remote panels are fitted.

Passive Remote Control Panels: The CP-1601A-P or the CP-1604-P passive remote control panel can be fitted to the Monitoring router. These panels are connected to the router via the Control parallel port. Only one passive remote control panel can be fitted to the Monitoring router.
Note: Passive remote control panels can not be fitted to a Monitoring router which has the optional Frame Controller module fitted.

Remote Control Panel: Any panel(s) from the entire range of Quartz remote control panels can be used with the Monitoring router. They connect via Q-Link and require the optional Frame Controller module to be fitted.

External third party control: The Monitoring router can be remotely controlled via an external third party control device, such as an automation system, when connected to the routers serial port. The optional Frame Controller module must be fitted.

Expansion
For solutions requiring more than 16 inputs, multiple Monitoring routers can be cascaded together building in to a system with over 256 inputs. Cascading the Q1601 provides a single output while the Q1602 provides two outputs. The optional Frame Controller module must be fitted to the master router in a cascaded system.

Power Supply
The Monitoring router is available as standard with an external power supply. An optional redundant power supply can also be fitted. A single non-redundant internal power supply can be fitted to the Monitoring router if required.

Digital Video (HD & SD)
• Terminating inputs with automatic cable equalization on each input
• Reclocking outputs with fully automatic sample rate selection supporting:
  - HD: 1.485 and 1.485/1.001Gb/s sample rates (SMPTE 292M)
  - SD: 143, 177, 270 and 360Mb/s sample rates (SMPTE 259M)
• Vertical interval switching for clean switching. Reverts to free running if the reference is not connected
• Support of Bi-level syncs (PAL/NTSC) for SD and Bi-level and Tri-level syncs for HD
• Tri-level sync circuit auto-detects the HD standard
• Transparent to high definition and standard definition signals carrying embedded audio
• Compatible with ASI transport streams, such as MPEG video
• Automatic standards selection for complete standards independence

Analog Video
• Terminating DC coupled inputs, suitable for composite and component signals
• Vertical interval switching for clean switching. Reverts to free running if a signal is not present on Input 1
• Suitable for unbalanced AES/EBU audio due to its wide analog bandwidth

Digital Audio (Balanced)
• Electronically balanced inputs and outputs to AES3-1992
• Two AES/EBU pairs

Analog Audio
• Stereo analog audio
• Electronically balanced inputs and outputs
• Handles wind sped LTC

Operational Features
• Deterministic switching
• Joystick override, used for matching the colour balanced of up to eight cameras
• Chop, used for rapidly switching between two sources, often used for calibration purposes

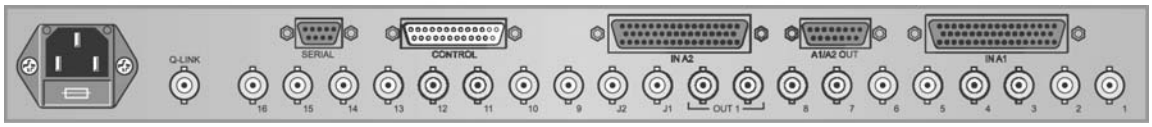

Specifications

Q1601 and Q1602:
Inputs: Fixed at 16
Outputs: Selectable, 1 or 2

Q0802-HD and Q1602-HD:
Inputs: Selectable, 8 or 16
Outputs: Fixed at 2

Standard Definition Video:
Inputs:
Signal level: 800mV p-p nominal
Impedance: 75Ω terminating
Return Loss to 5-270MHz:
18dB, 20dB typical
Cable Equalization at 270MHz
Belden 8281:
BBC PSF1/2: 300m min, 350m typical
BBC PSF1/3: 200m min, 250m typical
Connectors: BNC per IEC 60169-8 Amendment 2

Outputs:
Impedance: 75Ω
Return Loss to 5-270MHz:
18dB, 20dB typical
DC on output: 0 ±0.5V
Connectors: BNC per IEC 60169-8 Amendment 2

Signal Path:
Rise/Fall Times: 0.6-0.9ns
Path length: 9ns, spread 1ns
Switching Line : line 6/319 (625) & line 10/273 (525)
Jitter: 0.2 UI p-p with < 300m input cable

Analog Video:
Inputs:
Signal level: 1V p-p nominal, +6dB max.
Impedance: 75Ω terminating
Return Loss to 5.5MHz:
40dB
Connectors: BNC per IEC 60169-8 Amendment 2

Outputs:
Impedance: 75Ω
Return Loss to 5.5 MHz:
40dB
DC on output: ±50mV
Connectors: BNC per IEC 60169-8 Amendment 2

Signal Path:
Insertion gain: ±0.1dB
HF response: ±0.2dB, to 5.5MHz -3dB, to 100MHz
Diff Gain and Phase: 0.15%, 0.15 o (10-90% APL)
Timing spread at 3.58/4.43MHz:
±1o at any output
Crosstalk to 5.5MHz: -57dB
Noise to 5.5 MHz: -70dB rms.
Vertical Interval Switching:
Input 1

High Definition Video:
Inputs:
Signal level: 800mV p-p nominal
Impedance: 75Ω terminating
Return Loss 5 MHz to 1.485GHz:
better than 15dB
Cable equalization at 1.485GHz:
Belden 1694A: 100m typical
Belden 8281
BBC PSF1/2: 70m typical
Connectors: BNC per IEC 60169-8 Amendment 2

Outputs:
Impedance: 75Ω
Return Loss 5 MHz to 1.485GHz:
better than 15dB
DC on output: 0 ±0.5V
Connectors: BNC per IEC 60169-8 Amendment 2

Signal Path:
Rise/Fall Times: 270ps ±100ps
Path length: 5ns typical
Switching Line : Lines 6/319 (625), lines 10/273 (525) & line 7 (HD Tri-level sync)

Digital Audio (Balanced):
Inputs:
Sample rates: 32-96kHz
Transformer coupled DC isolation on input:
±50V
Signal level: 0.2-5V p-p
Impedance: 110Ω ±20%
Connectors: D50 female

Outputs:
Transformer coupled
Signal level: 2-7V p-p
Impedance: 110Ω
DC isolation: ±50 V
Rise/fall time: 3.5-10ns
Jitter: Conforms to ANSI S4.40 - 1992
Connectors: D15 female

Analog Audio:
Inputs:
Signal level: 0dBu nominal, +20dBu max.
Impedance: 20Ω
Connectors: D50 female

Outputs:
Impedance: 40Ω balanced
DC on output: ±50mV
Connectors: D15 female

Signal Path:
Insertion gain: ±0.1dB
Freq. Response 20Hz to 20kHz:
±0.25dB to 150kHz-3dB
Total Harmonic Distortion:
0.02%, 0.01% typical -10dBu to +20dBu and 20Hz to 20kHz
Crosstalk: -85dB 20Hz to 20kHz
Noise (un-weighted): -90dB rms. 20Hz to 20kHz

Common Features:
Control:
Remote passive panel:
D25 male, 50m (165 ft) max. cable length
With FU-0003 Option
Q-link to remote panels:
75Ω video cable, 500m max cable length
With FU-0003 Option
Serial RS232/422: D9 female

Power:
External:
Supply: Auto ranging 100-240VAC 50/60Hz
Power Consumption: 25W
Connections: Two pin bayonet locking
Redundant PSU: Optional

Internal (Optional):
Supply:
HD/SD: Auto ranging 100-240VAC 50/60Hz
AV: 100-120VAC, 200-240VAC
Power Consumption: 25W

Physical:
Height: 1RU, 44mm (1.75" nom.)
Width: 19" rack mount
Depth: 280mm (11")
Weight: 3.7kg (8.2lb)
Operating Temp: 0-40°C
Ventilation: Natural convection

Ordering Information

Q-1601S	16x1 Serial Video Router
Q-1601N	16x1 Analog Video Router
Q-1602S	16x2 Serial Video Router
Q-0802H	8x2 High Definition Video Router
Q-1602H	16x2 High Definition Video Router
Q-1602N	16x2 Analog Video Router

Odering Options

+FU	Frame controller for connection to other Quartz routers, for RS232-422 serial control and for cascading multiple 16x1 routers
+AA	Stereo Analog Audio option
+AESB	Balanced Digital Audio option
+PSI	Internal power supply
+PSX	Redundant external power supply

Accessories

CAB-R0017-2	Q1601 & Q1602 Control Interconnect Cable (120mm) for cascading routers
Control Panels	Please refer to Control Panel section

Q16-S, Q32-S Standard Definition

SD Video & Embedded Audio Routers

The Q16-S and Q32-S series are standard definition digital video and embedded audio routers.

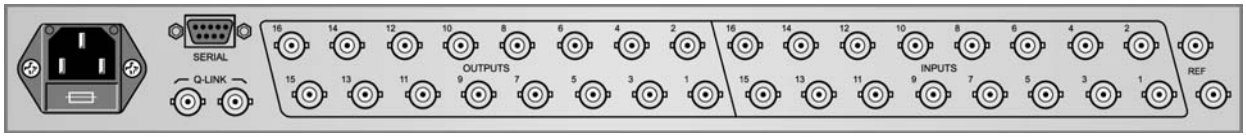

Q16-S Rear Panel

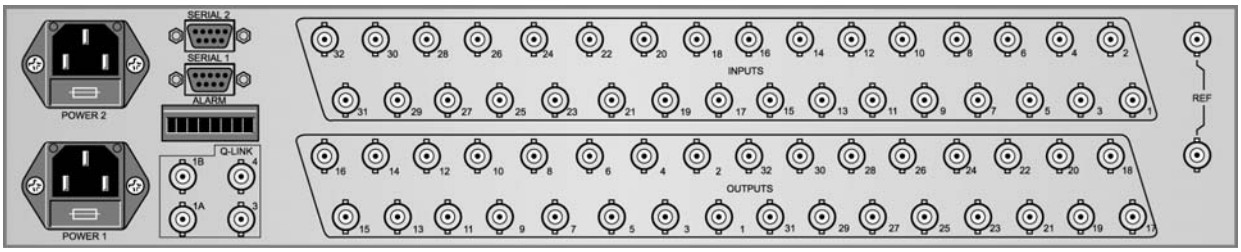

Q32-S Rear Panel

Features & Benefits

Operational Features
- Deterministic switching
- The Q16-S and the Q32-S are available with reclocking or non-reclocking outputs
- Reclocking and non-reclocking SIMMs can be mixed within the same router
- Diagnostic monitoring of internal temperature and power supply status
- All modules are accessed from the front of the router

Configuration
The modular design of the Q16-S and Q32-S routers give them a high degree of flexibility, allowing them to be easily configured in square or non-square sizes.

The Q16-S is housed in a 1RU frame and switches 16 sources to 16 destinations. The input stage of the Q16-S is fixed at 16 while the output stage is fully configurable. Up to 16 individual output SIMMs can be added to the output stage of the router at anytime.

The Q32-S is housed in a 2RU frame and can switch up to 32 sources to 32 destinations. The input stage of the Q32-S is initially fixed at 16 with the ability to add a further 16 input SIMMs to the router at anytime. The output stage is fully configurable with up to 32 individual output SIMMs being added to the output stage of the router at anytime.

Control
Both the Q16-S and the Q32-S routers include, as standard, an internal Frame Controller module which supports a single Q-Link and Serial port on the rear of the router. The optional internal CI module can be fitted to the Q32-S to increase the number of Q-Link and Serial ports. This option is not available for the Q16-S.

The Q16-S and Q32-S have a number of control options, they are:

Local Control Panels:
The CP-1600A-LP, can be fitted to the Q16-S (up to a maximum matrix size of 16x8). This option is not available for the Q32-S.

Passive Remote Control Panels:
The CP-1601A-P and CP-1604-P passive remote control panels can be fitted to the Q16-S and Q32-S router via a PI-1604 or PI-1608 parallel interface.

Remote Control Panel:
Any panel(s) from the entire range of Quartz remote control panels can be used with the Q16-S and Q32-S router connected via Q-Link.

External third party control:
The Q16-S and Q32-S router can be remotely controlled via an external third party control device, such as an automation system, when connected to the routers serial port.

Expansion
The output stage of the Q16-S and the input and output stage of the Q32-S can expanded at any time by adding additional SIMMs. They can not be expanded beyond their frame size.

Power Supply
The power supplies for the Q16-S and the Q32-S are internal. The 2RU Q32-S frame can be fitted with an optional redundant power supply with separate AC power inlet and alarm output. This option is not available for the Q16-S.

Digital Video
- Terminating inputs with automatic cable equalization on each input
- Reclocking outputs with fully automatic sample rate selection supporting SD - 143, 177, 270 and 360Mb/s sample rates (SMPTE 259M)
- Non-reclocking outputs for low cost and standards independence
- Vertical interval switching for clean switching. Reverts to free running if the reference is not connected
- Support of Bi-level syncs (PAL/NTSC)
- Transparent to standard definition signals carrying embedded audio
- Compatible with ASI transport streams, such as MPEG video
- Automatic standards selection for complete standards independence

Specifications

Configuration

Inputs:	Q16:	Fixed at 16
	Q32:	Selectable, from 16 or 32
Outputs:	Q16:	Selectable in blocks of 1
	Q32:	Selectable in blocks of 1

Standard Definition Video

Inputs:
Signal level: 800mV p-p nominal
Impedance: 75Ω terminating
Return Loss, 5-270 MHz:
15dB, 16dB typical (for reclocking outputs)
Cable equalization at 270 MHz:
Belden 8281
BBC PSF1/2: 250m min, 300m typical
BBC PSF1/3: 150m min, 200m typical
(for non-reclocking outputs)
Total Input plus Output Cable length supported up to 270MHz:
Belden 8281
BBC PSF1/2: 100m min, 200m typical
BBC PSF1/3: 60m min, 120m typical
Connectors: BNC per IEC 60169-8 Amendment 2

Outputs

Signal level: 800mV p-p ±10%
Impedance: 75Ω
Return Loss 5-270MHz:
15dB
DC offset: 0 ±0.5 V
Connectors: BNC per IEC 60169-8 Amendment 2

Signal Path

Rise/fall times: 0.6 to 0.9ns
Path length: 12ns, typical
Output jitter: 0.2 UI p-p with < 300m input cable

Control

Q-link to remote panels:
1 as standard (additional 3 Q-links optional)
Interconnect: 75Ω video cable, 500 maximum length
Connector: BNC per IEC 60169-8 Amendment 2
Serial RS232/422: 1 as standard (additional 1 serial port optional)
Connector: D9 female

Switching Reference

Reference inputs: Analog 625 or 525 black
Signal level: 1V p-p ±3dB or 1-4V pulses
Impedance: 75Ω (loop through)
Switching Line : Lines 6/319 (625) & lines 10/273 (525)

Power

Supply: Auto ranging 100 to 240V AC 50/60Hz
Power Consumption: Q16: 25W
Q32: 50W
Redundant PSU: Optional with alarm output, Q32 only

Physical

Height: Q16: 1RU, 1.75" nom (44mm)
Q32: 2RU, 3.5" nom. (88 mm)
Width: 19" (483mm)
Depth: 19" nom (483mm)
Weight: Q16: 5.2kg (11.3lb)
Q32: 6.6kg (14.5lb)
Operating Temp: 0-40°C
Ventilation: Fan cooled. Air intake at the front, exhaust at the sides.

Ordering Information

Q16-1604S	16x4 Serial Video Router
Q16-1608S	16x8 Serial Video Router
Q16-1616S	16x16 Serial Video Router
Q32-1616S	16x16 Serial Video Router
Q32-3204S	32x4 Serial Video Router
Q32-3208S	32x8 Serial Video Router
Q32-3232S	32x32 Serial Video Router

Ordering Options

AK-0002	1RU Rear frame support kit (Recommended to provide additional support for 1RU frames
CI-0001	Sub-module that enables a second RS232/422 serial port
+R4	4 outputs
+R8	8 outputs
+R16	16 outputs
+R32	32 outputs

For other configurations contact factory
Note: The following options are only available on Q32-S versions

+2PS	Redundant power supply
CI-0004	Multi Q-Link Card (Fits inside frame to add up to three Q-Link ports and one RS232/422 port)

Q16-N, Q32-N

Analog Video Routers

The Q16-N and Q32-N are analog video routers.

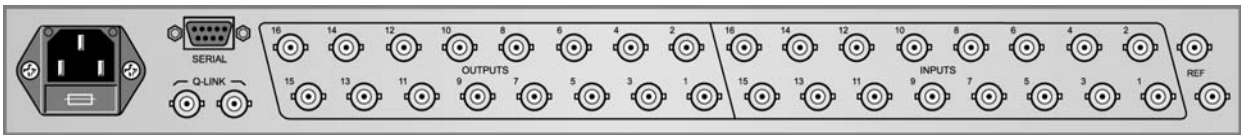

Q16-N Rear Panel

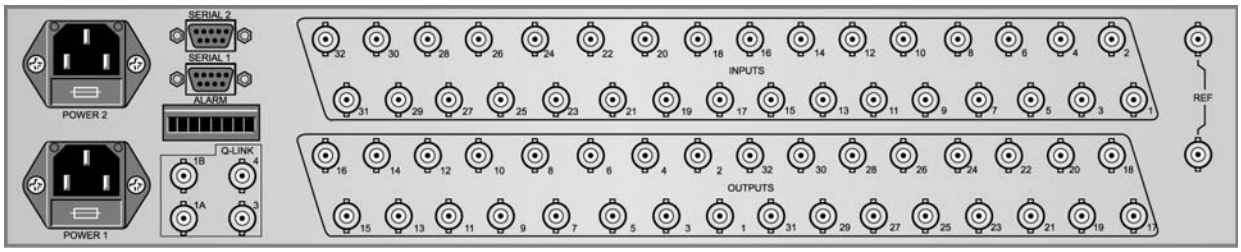

Q32-N Rear Panel

Features & Benefits

Configuration
The modular design of the Q-16N and Q-32N routers give them a high degree of flexibility, allowing them to be easily configured in square or non-square sizes.

The Q16-N is housed in a 1RU frame. The input stage of the Q16-N is fixed at 16 while the output stage can be set to 4, 8 or 16. The Q16-N can be upgraded by returning the router to the local service center.

The Q32-N is housed in a 2RU frame. The Q32-N is available in three fixed sizes - 16x16, 32x16 and 32x32. The Q32-N can be upgraded by returning the router to the local service center.

Control
Both the Q16-N and the Q32-N routers include, as standard, an internal Frame Controller module which supports a single Q-Link and Serial port on the rear of the router. The optional internal CI module can be fitted to the Q32-N to increase the number of Q-Link and Serial ports. This option in not available for the Q16-N.

The Q-16N and Q32-N have a number of control options, they are:

Local Control Panels:
The CP-1600A-LP can be fitted to the Q16-N. This option in not available for the Q32-N.

Passive Remote Control Panels:
The CP-1601A-P and CP-1604-P passive remote control panels can be fitted to the Q16-N and Q32-N routers via a PI-1604 or PI-1608 parallel interface.

Remote Control Panel:
Any panel(s) from the entire range of Quartz remote control panels can be used with the Q16-N and Q32-N router conneted via Q-Link.

External Third Party Control:
The Q16-N and Q32-N routers can be remotely controlled via an external thrid party control device such as an automation system, when connected to the router's serial port.

Expansion
The output stage of the Q16-N can be expanded from 4 to 8 or 16. The input or output stage of the Q32-N can be expanded from 16 to 32.

In both cases the router needs to be returned to the local service center for the upgrade. They cannot be expanded beyond their frame sizes.

Power Supply
The power supplies for the Q16-N and the Q32-N are internal. The 2RU Q32-N frame can be fitted with an optional redundant power supply with separate AC power inlet and alarm output. This option is not available for the Q16-N.

Analog Video
- Terminated inputs for best possible signal performance
- DC restored inputs for composite signals ensures switching free from the picture disturbances often encountered in DC coupled only designs
- Vertical interval switching for clean switching reverts to free running if no sync reference (video or pulse) with all all levels of the same route switching in the same field
- Frames can be stacked for parallel component analog video routers, or a single frame can be split to provide, for example, four separate 8x8 routers from a single 32x32 frame

Operational Features
- Diagnostic monitoring of temperature and PSU status
- All modules are installed from the front for easy access for upgrades and maintenance not possible with some alternative designs
- Built-in control system

Specifications

Configuration:
Inputs: Q16 fixed at 16
Q32 Selectable, 16 or 32
Outputs: Q16 Selectable, 4, 8, 16
Q32 Selectable 4, 8, 16, or 32

Analog Video Inputs:
Signal level: 1V p-p nominal, +3dB max.
Impedance: 75Ω terminating
Return Loss to 5.5MHz:
40dB
Connectors: BNC per IEC 60169-8 Amendment 2

Analog Video Outputs:
Impedance: 75Ω
Return Loss to 5.5MHz:
40dB
DC on output: ±50mV
Connectors: BNC per IEC 60169-8 Amendment 2

Signal Path:
Insertion gain: ±0.1dB
HF response: 15kHz to 5.5MHz ±0.1dB to 30MHz
+0.2, -0.5dB to 100MHz -3dB
LF response, tilt at 50Hz:
0.5%
2T pulse, pulse/bar, bar slope:
0.25%K
Luma/Chroma inequalities:
±0.5% gain, ±5ns delay
Diff Gain and Phase: 0.1%, 0.1° (10-90% APL)
Luminance non-linearity:
0.2%
Path length, typical: 10ns
Timing spread at 3.58/4.43MHz:
±1° at any output
Crosstalk at 3.58/4.43MHz:
-57dB
Noise to 5.5MHz: -70dB rms.

Control:
Q-link to remote panels:
1 as standard (additional 3 Q-links optional) 75Ω video cable 500m max. length
Serial RS232/422: 1 as standard (additional serial port optional) D9 female

Switching Reference:
Signal level: 1V p-p ±3dB or 1-4V pulses 525 or 625 line
Impedance: 75Ω (loop through)
Switching Line : Lines 6/319 (675)
Lines 10/273 (525)

Power:
Supply: Auto ranging 100 to 240V AC
50/60Hz
Power Consumption: 12W
Backup: Option with alarm output on 2U frame

Physical:
Height:
Q16: 1RU, 44mm (1.75" nom.)
Q32: 2RU, 88mm (3.5" nom.)
Width: 19" (483mm)
Depth: 19" nom (483mm)
Weight: Q16: 5.15kg
Q32: 6.6kg
Operating Temp: 0-40°C
Spec Maintained: 10-30°C
Ventilation: Natural convection

Ordering Information

16x4 to 16x16 in 1RU frame with single power supply.

Q16-1604N	16x4 Analog Video Router
Q16-1608N	16x8 Analog Video Router
Q16-1616N	16x16 Analog Video Router

16x16 to 32x32 in 2RU frame with option of redundant power supply.

Q32-1616N	16x16 Analog Video Router
Q32-3216N	32x16 Analog Video Router
Q32-3232N	32x32 Analog Video Router

Ordering Options

+2PS	Redundant power supply (Q-32N versions only)
AK-0002	Rear frame support kit - Recommended for mobile applications
CI-0001	Sub-module that enables a second RS232/422 serial port
CI-0004	Multi Q-Link Card (Fits inside frame to add up to three Q-Link ports and one RS232/422 port)

Q16-AES, Q32-AES

Digital Audio Routers

The Q16-AES and Q32-AES routers provide asynchronous or synchronous AES/EBU digital audio switching with either balanced or unbalanced inputs and outputs.

The synchronous audio switching mode also supports a number of additional features such as Soft Switching, Wild Shuffling, Mono Mixing and Sample Rate Conversion.

Features & Benefits

- Sample rate conversion (SRC)
- Guaranteed click-free switching using “Soft Switching” technology
- Wild Shuffling
- Mono Audio Mix
- Input and output gain adjustment
- Input sample rates of 32kHz, 44.1kHz, 48kHz and 96kHz
- Output sample rates of 48kHz or 96kHz in Soft Switch mode
- Output sample rates of 32kHz, 44.1kHz, 48kHz and 96kHz in Soft Switch bypass mode
- Digital silence on output when input source is lost
- Reclocking on each input
- Supports switching of Dolby E and other data streams in Soft Switch bypass mode
- Transformer coupled inputs with DC protection
- Transformer coupled outputs with DC protection
- Frames may be stacked for multi-level systems
- Optional dual PSU for redundancy on the Q32
- Diagnostic monitoring of internal temperature and PSU status
- Built-in control system

Configuration

Q16-AESB: The Q16-AES is housed in a 1RU and is only available in a single power supply configuration.

Asynchronous switching with balanced I/O: Available in two fixed sizes - 16x16 or 32x32.

Asynchronous switching with unbalanced I/O: Only available in one fixed size - 16x16.

Synchronous switching (+SS option): Can be added to any router configuration.

Q32-AESB: The Q32-AES is housed in a 2RU and is available in a redundant power supply configuration.

Asynchronous switching with balanced or unbalanced I/O: Available in two fixed sizes - 16x16 or 32x32.

Synchronous switching with balanced or unbalanced I/O (+SS option): Can be added to any router configuration.

Control

The AES routers include as standard, an internal FU-0003 Controller module supporting a single Q-Link and RS 422/232 Serial port. The optional internal CI module can be fitted to the Q32-AES to increase the number of Q-Link and Serial ports. This option is not available for the Q16-AES.

The routers have a number of control options, they are:

Local Control Panels: The CP-1600A-LP can be fitted to the Q16-AES. This option is not available for te Q32-AES.

Passive Remote Control Panels: The AES router’s passive remote control panels can be fitted to the Q16-AES and Q32-AES routers via a PI-1604 or PI-1608 parallel interface.

Remote Control Panel: Any panel(s) from the entire range of Quartz remote control panels can be used with the Q16-AES and Q32-AES routers connected via Q-Link.

External Third Party Control: The Q16-AES and Q32-AES routers can be remotely controlled via an external third party control device such as an automation system, when connected to the router’s serial port.

Expansion

The Q16-AES with unbalanced I/O cannot be expanded. The Q16-AES with balanced I/O can be expanded from 16x16 to 32x32. The input and output stage of the Q32-AES can be expanded at any time by adding additional SIMMs. The routers cannot be expanded beyond its frame size.

Power Supply

The power supplies for the Q16-AES and the Q32-AES are internal. The 2RU Q32-AES frome can be fitted with an optional redundant power supply with separate AC power inlet and alarm output. This option is not available for the Q16-AES.

Digital Audio

Asynchronous: A simple low cost crash switch router.

Synchronous (+SS option): Provides a clean switch between audio sources as long as they are all synchronized to a common studio reference. The synchronous operation will also align locked but misaligned digital audio signals to the router’s reference. A number of extra features such as I/P & O/P Gain Control, Mono Mix, Soft Switching, Wild Shuffling and Sample Rate Conversion are included as standard.

Bypass: The Soft Switch or SRC circuit can be bypassed in order to allow Dolby E and other AES and non-AES formats to be switched through the router. Dolby E and other non-AES data can be routed through the Asynchronous router without being affected.

Operational Features (+SS Option only)

Sample Rate Conversion: Sample Rate Conversion (SRC) allows the router to accept input sample rates between 32kHz and 96kHz. These sample rates are then converted to the selected sample rate of the router, 48kHz or 96kHz, before being switched to the output. Output sample rates other than 48kHz or 96kHz can be handled by switching selected outputs into a mode that bypasses the Sample Rate Converters.

Soft Switch: Synchronization does not eliminate audible switching ‘clicks’ as the switch may take place when the difference in the source amplitudes is large. To avoid the fast transition caused by this large difference in source amplitudes, the router uses a programmable Crossfade to switch between the sources. The duration of the Crossfade can be set between 0 and 20 mSeconds. This guarantees a “click-free” switch every time. Crossfading is preferable to a ‘V’ fade as it avoids the dip in audio level resulting from a ‘V’ fade.

Wild Shuffling: All synchronized sources can be wild shuffled. Wild shuffling allows any input audio track to be selected and grouped together with any other audio track. This new audio stream can be routed to the required destination. This allows a 32x32 stereo router to become a 64x64 mono router.

Mono Audio Mix: Mono audio mix enables the router to mix together two selected mono audio tracks. The router combines the two audio tracks together to give a single mono mixed audio track which is then routed to the chosen destination. Output = 1/2 (Input A + Input B).

Gain Adjustment: The gain for each half of the stereo pair on both the input and the output can be individually controlled. The adjustment range +12dB to =34dB in increments of 0.002dB.

Q16-AES Rear Panel

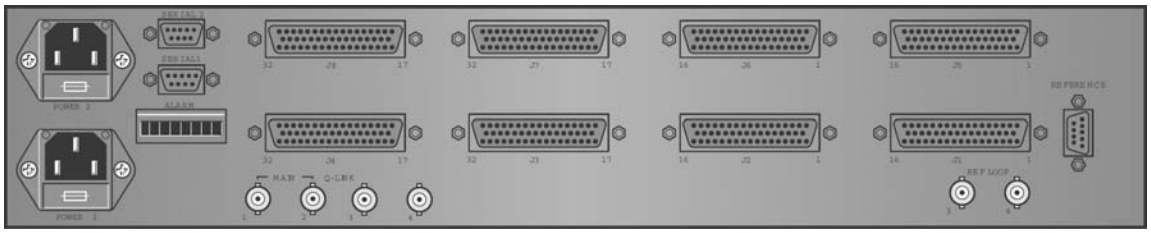

Q32-AES Rear Panel

Specifications

Configuration:
Inputs: Selectable 16 or 32
Outputs: Selectable 16 or 32 (depends on version)

Audio Inputs:
Sample Rates: 32kHz, 44.1kHz, 48kHz, 96kHz
Transformer Coupled DC on Input: ±50V

Balanced Version (D-Type):
Standard: AES-2003
Signal Level: 2-5V p-p
Impedance 110Ω ±20%
Connectors: D50 female, XLR Breakout Panel available

Unbalanced Version (BNC):
Standard: SMPTE 276M
Impedance: 75Ω
Return Loss: 25dB, 0.1-6.0kHz
Connectors: BNC per IEC 60169-8 Amendment 2

Audio Outputs:
Transformer Coupled DC Isolation: ±50V

Balanced Version (D-type):
Standard: AES-2003
Signal Level: 2-5V p-p
Impedance: 110Ω
Rise/Fall Time: 3.5-10ns
Connectors: D50 female, XLR Breakout Panel available

Unbalanced Version (BNC):
Standard: SMPTE 276M
Signal Level: 1.0V p-p ±50%
Impedance: 75Ω
Return Loss: 25dB, 0.1-6.0kHz
Jitter: Conforms to ANSI S4.40 - 1992
Connectors: BNC per IEC 60169-8 Amendment 2

Control:
Q-Link to remote panels: 1 as standard (additional 3 Q-Links options) 75Ω video cable 500m max. length
Serial RS232/422: 1 as standard (additional serial port optional) D9 female

Power:
Supply: Auto ranging 100 to 240V AC 50/60Hz
Power Consumption: Q16: 15W
Q32: 15W
Backup: Optional with alarm output (Q32 only)

Physical:
Height: Q16: 1RU, 1.75" nom (44mm)
Q32: 2RU, 3.5" nom (88mm)
Width: 19" rack mount (483mm)
Depth: 485mm (19" nom)
Weight: Q16: 11.35lb (5.15kg)
Q32: 14.55lb (6.6kg)
Operating Temp.: 0-40°C
Spec. Maintained: 10-30°C
Ventilation: Natural convection

Ordering Information

Each frame ships with a single power supply as standard. An optional redundant power supply is available on the Q32.

Balanced Asynchronous
Q16-1616-AESB 16x16 Digital audio, 1RU Balanced
Q16-3232-AESB 32x32 Digital audio, 1RU Balanced
Q32-1616-AESB 16x16 Digital audio, 2RU Balanced
Q32-3232-AESB 32x32 Digital audio, 2RU Balanced

Unbalanced Asynchronous
Q16-1616-AESU 16x16 Digital Audio, 1RU Unbalanced
Q32-1616-AESU 16x16 Digital Audio, 2RU Unbalanced
Q32-3232-AESU 32x32 Digital Audio, 2RU Unbalanced

The models listed below handle standard AES/EBU signals with balanced 110Ω inputs and outpus via D50 connectors or SMPTE/SPDIF signals with unbalanced 75Ω inputs and outputs via BNC connectors.

Ordering Options
+2PS Redundant power supply (Q32 only)
+SS Clean Switch between synchronous sources
CI-0001 RS232/RS422 Serial Card Modification to add second serial port to monitoring routers
CI-0004 Multi Q-Link Card (Fits inside frame to add up to three Q-Link ports and one RS232/422 port)
AK-0002 1RU Rear Frame Support Kit
AK-0006 Audio Connectors, D50 male (each)
AK-0008 16 way XLR Breakout Panel, Male
AK-0009 16 way XLR Breakout Panel, Female

Q16-AA, Q32-AA

Mono & Stereo Analog Audio Routers

The Q16-AA and Q32-AA are small mono and stereo analog audio routers.

Features & Benefits

- Output Crossover, which is available on mono routers configured as stereo provides the following extra features:
  - left and right channels can be reversed
  - left (or right) channel can be fed to both left and right outputs
- Handles timecode, even at spooling speeds
- Electronically balanced inputs with excellent common mode rejection
- Electronically balanced outputs
- Frames may be stacked for use in multi-level systems
- XLR Breakout Panels are available to simplify installation
- Diagnostic monitoring of temperature and PSU status
- Built-in control system
- All modules are installed from the front for easy access for upgrades and maintenance

Configuration
The design of the Q16-AA and Q32-AA router allows them to be configured in square or non-square sizes.

Q16-AA: The Q16-AA is housed in a 1RU frame and is only available in a non-redundant power supply configuration.

Q16-AA Mono: Available in four fixed sizes, 16x16, 32x8, 32x16 and 32x32.

Q16-AA Stereo: Available in three fixed sizes, 16x4, 16x8 and 16x16.

Q32-AA: The Q32-AA is housed in a 2RU frame and is available in a redundant power supply configuration.

Q32-AA Mono: Available in seven fixed sizes, 16x16, 32x8, 32x16, 32x32, (64x8, 64x16 and 64x32).

Q32-AA Stereo: Available in six fixed sizes, 16x4, 16x8, 16x16, 32x8, 32x16 and 32x32.

Control
Both the Q16-AA and the Q32-AA router include, as standard, an internal Frame Controller module which supports a single Q-Link and Serial port on the rear of the router. The optional internal CI module can be fitted to the Q32-AA to increase the number of Q-Link and Serial ports. This option is not available for the Q16-AA.

The Q16-AA and Q32-AA have a number of control options, they are:

Local Control Panels: The CP-1600A-LP, can be fitted to the Q16-AA. This option is not available for the Q32-AA.

Passive Remote Control Panels: The CP-1601A-P and CP-1604-P passive remote control panels can be fitted to the Q16-AA and Q32-AA router via a PI-1604 or PI-1608 parallel interface.

Remote Control Panel: Any panel(s) from the entire range of Quartz remote control panels can be used with the Q16-AA and Q32-AA router connected via Q-Link.

External third party control: The Q16-AA and Q32-AA routers can be remotely controlled via an external third party control device, such as an automation system, when connected to the routers serial port.

Expansion
The input or output stage of the Q16-AA and the Q32-AA can be expanded from 16 to 32 depending upon the audio format of the router, mono or stereo. In all cases the router needs to be returned to the local service centre to be upgraded. The ROUTERS can not be expanded beyond THEIR frame size.

Power Supply
The power supplies for the Q16-AA and the Q32-AA are internal. The 2RU Q32-AA frame can be fitted with an optional redundant power supply with separate AC power inlet and alarm output. This option is not available for the Q16-AA.

Q16-AA Rear Panel

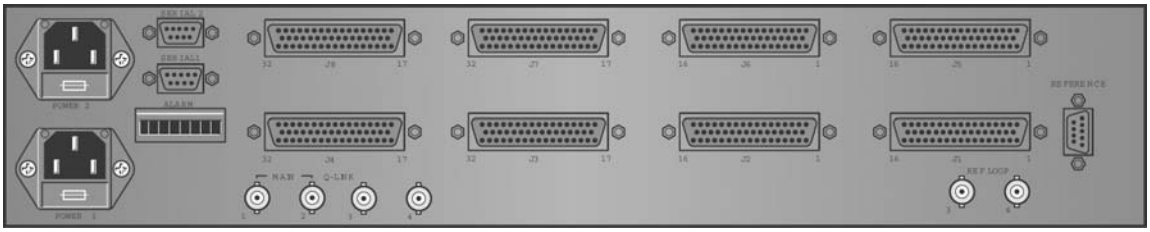

Q32-AA Rear Panel

Specifications

Configuration:

Inputs:		
Stereo:	Q16:	Fixed at 16
	Q32:	Selectable, 16 or 32
Mono:	Q16:	Selectable, 16 or 32
	Q32:	Selectable, 16 or 32 or 64
Outputs:		
Stereo:	Q16:	Selectable, 4, 8 or 16
	Q32:	Selectable, 4, 8, 16 or 32
Mono:	Q16:	Selectable, 8, 16 or 32
	Q32:	Selectable, 8, 16, 32 or 64

Audio Inputs:

Signal level:	0dBu nominal, +24dBu max.
Impedance:	20kΩ
Common Mode Rejection:	
20Hz to 3kHz:	-80dB, -100dB typical at 50/60Hz
3kHz to 20kHz:	-60dB, -70dB typical at 20kHz
Common Mode Level:	+27dBu maximum, no signal
Connectors:	D50 female

Audio Outputs:

Impedance:	40Ω balanced
DC on output:	±50mV
Connectors:	D50 female

Signal Path:

Insertion gain:	±0.1dB
Frequency Response at:	
20Hz to 20kHz:	±0.25dB
to 150kHz:	-3dB
Delay between two routes:	1µsec
Total Harmonic Distortion:	0.02%, 0.01% typical -10dBu to +20dBu and 20Hz to 20kHz
Crosstalk 20Hz to 20kHz:	-80dB
Noise (un-weighted) 20Hz to 20kHz:	-85dB rms

Control:

Q-link to remote panels:	1 as standard (additional 3 Q-links optional) 75Ω video cable 500m max. length
Serial RS232/422:	1 as standard (additional serial port optional) D9 female

Power:

Supply:	Auto ranging 100-240V, 50/60Hz	
Power Consumption:	Q16:	20W
	Q32:	40W
Backup:	Optional with alarm output on 2RU frame	

Physical:

Height:	Q16:	1RU, 44mm (1.75" nom.)
	Q32:	2RU, 88mm (3.5" nom.)
Width:	19" rack mount	
Depth:	485mm (19" nom.)	
Weight:	Q16:	5.2kg
	Q32:	6.6kg
Audio Connectors:	D50 female multi-pin connectors each carrying 16 balanced signals	
Operating Temp:	0-40°C	
Specification maintained:	10-30°C	
Ventilation:	Q16:	Natural convection
	Q32:	Fan cooled. Intake at front Exhaust at side

Ordering Information

Q16-1604-AAS	16x4 Dual Audio Router
Q16-1608-AAS	16x8 Dual Audio Router
Q16-1616-AAS	16x16 Dual Audio Router
Q16-1616-AAM	16x16 Mono or 8x8 Dual Audio Router
Q16-3208-AAM	32x8 Mono or 16x4 Dual Audio Router
Q16-3216-AAM	32x16 Mono or 16x8 Dual Audio Router
Q16-3232-AAM	32x32 Mono or 16x16 Dual Audio Router
Q32-1604-AAS	16x4 Dual Audio Router. 2RU frame, Dual channel
Q32-1608-AAS	16x8 Dual Audio Router. 2RU frame, Dual channel
Q32-1616-AAS	16x16 Dual Audio Router. 2RU frame, Dual channel
Q32-1616-AAM	16x16 Mono or 8x8 Dual Audio Router
Q32-3208-AAM	32x8 Mono or 16x4 Dual Audio Router
Q32-3216-AAM	32x16 Mono or 16x8 Dual Audio Router
Q32-3232-AAM	32x32 Mono or 16x16 Dual Audio Router
Q32-3208-AAS	32x8 Dual or 64x8 Mono Audio Router
Q32-3216-AAS	32x16 Dual or 64x16 Mono Audio Router
Q32-3232-AAS	32x32 Dual or 64x32 Mono Audio Router

Ordering Options

+2PS	Redundant power supply (Q32 only)
CI-0001	RS232/RS422 Serial Card Modification to add second serial port to monitoring routers
CI-0004	Multi Q-Link Card (Fits inside frame to add up to three Q-Link ports and one RS232/422 port)
AK-0002	1RU Rear Frame Support Kit,
AK-0006	Audio Connectors, D50 male (each)
AK-0008	16 way XLR Breakout Panel, Male
AK-0009	16 way XLR Breakout Panel, Female

Q32-PR, Q64-PR

Port-to-Port Data Routers

The Q32-PR and Q64-PR data routers provide port-to-port routing. Both models support a mix of RS422 and RS232 ports and are able to convert between the two standards. This means that the router can accept controlling devices in RS422, for example, whose ports are set as RS232 or a mixture of both.

It is designed to route the remote control signals between equipment, for example VTRs (normally controlled devices) and edit controllers (controlling devices) and can equally handle other devices such as PCs. The router can switch four wire signals, a transmitter pair and a receiver pair, through the matrix.

A route can be established between any two of the ports. For example, on a Q64-PR a maximum of 32 pairs of machines can be connected at one time.

Unlike traditional matrix based routers there is no limitation on the routing of controlling devices and controlled devices.

During direct dubbing between VTRs, one of the VTRs changes function to become a controlling device and is used to send commands to the other VTR which is still a controlled device. This is a problem for traditional matrix based routers where the ports are organized to support either controlling or controlled devices and are not able to change mode dynamically. By contrast the ports of the Quartz Port Data Router can adapt, manually or automatically, between the two modes, which simplifies the operation.

The router fully integrates with the standard Quartz control system to follow video & audio routers or can operate independently.

Features & Benefits

- Port-to-port routing for flexible operation
- Standard configurations of 16, 32, 48 and 64 port.
- Manual or automatic sensing of controlling and controlled devices
- Supports a mix of RS232 or RS422 signals and conversion between the two
- Supports Sony interface for detecting controlling or controlled devices
- Optional redundant power supply with separate AC power inlet and alarm output
- Built-in control system
- Built-in RS232/422 serial port for control purposes
- Front access plug-in modules for easy upgrades and maintenance
- Diagnostic monitoring of temperature and PSU status

Configuration

The modular design of the Q32-PR and Q64-PR routers give them a high degree of flexibility, allowing them to be easily configured. The Q32-PR is housed in a 2RU frame and provides port-to-port routing for up to 32 devices. The input and output is configurable in steps of 16.

The Q64-PR is housed in a 3RU frame and provides port-to-port routing for up to 64 devices. The input and output stage of the Q32-PR is configurable in steps of 16. Individual I/O SIMMs can be added to the router at anytime.

Control

Both the Q32-PR and the Q64-PR router include, as standard, an internal Frame Controller module which supports a single Q-Link and Serial port on the rear of the router.

The optional internal CI module can be fitted to both of the routers to increase the number of Q-Link and Serial ports.

The Q32-PR and Q64-PR have a number of control options, they are:

Passive Remote Control Panels: The CP-1601A-P and CP-1604-P passive remote control panels can be fitted to the Q32-PR and Q64-PR router via a PI-1604 or PI-1608 parallel interface.

Remote Control Panel: Any panel(s) from the entire range of Quartz remote control panels can be used with the Q32-PR and Q64-PR router connected via Q-Link.

External third party control: The Q32-PR and Q64-PR router can be remotely controlled via an external third party control device, such as an automation system, when connected to the routers serial port.

Expansion

The input and output stage of the Q32-PR and Q64-PR can expanded at any time by adding additional SIMMs. They can not be expanded beyond their frame size.

Power Supply

The power supplies for the Q32-PR and Q64-PR are internal. Both routers can be fitted with an optional redundant power supply with separate AC power inlet and alarm output.

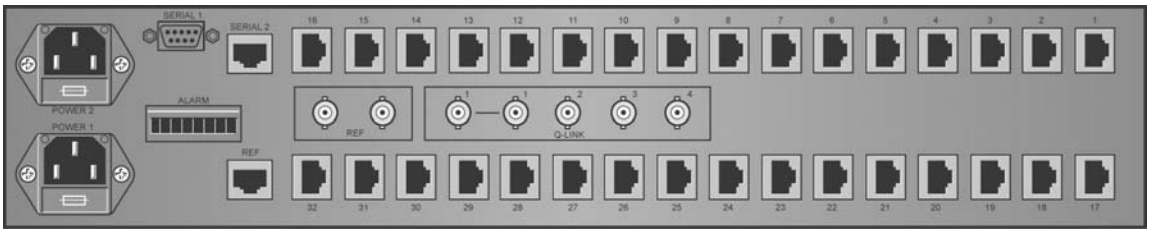

Specifications

Configuration:

RS232 I/O ports:	Selectable in blocks of 2
RS422 I/O ports:	Selectable in blocks of 2

Note: RS232 and RS422 ports can be mixed in the same router.

Signal Inputs:

Type:	Accepts signals to RS422A
Signal level:	0.2-7V p-p
Connectors:	RJ-45

Signal Outputs:

Type:	Conforms to RS422A (STD) RS232 optional
Signal level:	2-7V p-p
Impedance:	110Ω
Connectors:	RJ-45

Control:

Q-link to remote panels:	1 as standard (additional 3 Q-links with CI-0004 option)
Serial RS232/422:	1 as standard (additional port with CI-0001 or CI-0004 option) D9 female

Power:

Supply:	Auto ranging 100 to 240V AC 50/60Hz
Power:	15W
Backup:	Optional with alarm output

Physical:

Height:	
Q32:	2RU = 88mm (3.5" nom.)
Q64:	3RU = 132mm (5.25" nom.)
Width:	19" rack mount
Depth:	485mm (19" nom.)
Weight:	
Q32:	4.4kg
Q64:	6.6kg
Signal Connectors:	RJ45
Operating Temp:	0-40°C
Ventilation:	Natural convection

Ordering Information

Up to 32 ports, supporting RS422, in a single 2RU frame with single power supply as standard.

Q32-16PR	16 Port Data Router
Q32-32PR	32 Port Data Router

Up to 64 ports, supporting RS422, in a single 3RU frame with single power supply as standard.

Q64-16PR	16 Port Data Router
Q64-32PR	32 Port Data Router
Q64-48PR	48 Port Data Router
Q64-64PR	64 Port Data Router

Ordering Options

+2PS	Redundant power supply
CI-0001	Sub-module that enables a second RS232/422 serial port
CI-0004	Sub-module that enables three additional Q-Links and one extra RS232/422 serial port
QPR-RS232	RS232 output (per 2 ports)

The Q16-RR and Q32-RR relay routing switcher has been designed to route signals which cannot be handled by normal video or audio routers, either because the signal is bi-directional, or has incompatible levels.

The 16x8 1RU unit is supplied complete with power supply and the standard Quartz controller. A 2RU frame is available if a 16x16 matrix is required and/or a redundant power supply. The inputs must be wired together externally.

Features & Benefits

- Two pole model used for two wire signals, such as balanced bi-directional audio
- Four pole model used for four wire signals, such as RS422 control
- With external wiring, frames may be stacked for larger numbers of inputs and outputs
- Suitable for telephone signals with ringing
- Relay contacts default to open condition in the absence of power
- Front access plug-in modules for easy maintenance and upgrades
- RS232/422 Serial Interface for remote control
- D50 multi-pole for signal connectors
- Diagnostic monitoring of temperature and PSU status
- Built-in control systems

Configuration
The Q16-RR is housed in a 1RU frame and switches 16 sources to 8 destinations. The input and output stage of the Q16-RR is fixed.

The Q32-RR is housed in a 2RU frame and can switch up to 16 sources to 16 destinations. The input and output stage of the Q32-RR is fixed.

Control
Both the Q16-RR and the Q32-RR router include, as standard, an internal FU-0003 Controller module which supports a single Q-Link and Serial port on the rear of the router. The optional internal CI module can be fitted to the Q32-RR to increase the number of Q-Link and Serial ports. This option is not available for the Q16-RR.

The Q16-RR and Q32-RR have a number of control options, they are:

Local Control Panels: The CP-1600A-LP, can be fitted to the Q16-RR. This option is not available for the Q32-RR.

Passive Remote Control Panels: The CP-1601A-P and CP-1604-P passive remote control panels can be fitted to the Q16-RR and Q32-RR router via a PI-1604 or PI-1608 parallel to interface.

Remote Control Panel: Any panel(s) from the entire range of Quartz remote control panels can be used with the Q16-RR and Q32-RR router connected via Q-Link.

External third party control: The Q16-RR and Q32-RR router can be remotely controlled via an external third party control device, such as an automation system, when connected to the router's serial port.

Expansion
Both the Q16-RR and the Q32-RR can not be expanded.

Power Supply
The power supplies for the Q16-RR and the Q32-RR are internal. The 2RU Q32-RR frame can be fitted with an optional redundant power supply with separate AC power inlet and alarm output. This option is not available for the Q16-RR.

Q16-RR Rear Panel

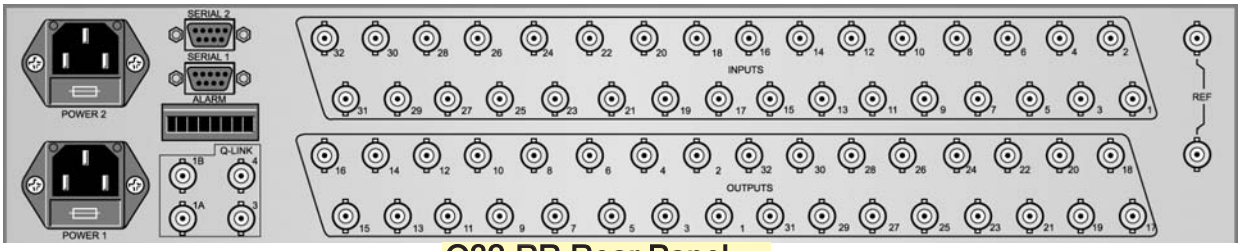

Q32-RR Rear Panel

Specifications

Configuration:
Inputs: Fixed at 16
Outputs: Selectable, 8 or 16

Relay Contacts:
Gold over silver palladium
Contact resistance: 1Ω max.
Operate/Release time: 1Ω max.
Contact rating: 0.5A @ 24V DC
0.15A @ 100V rms. AC
100V AC/DC
Service Life: Typically 1.0 x 10^6 at low load
0.5 x 10^6 at full load

Control:
Q-link to remote panels: 1 as standard (additional 3 Q-links on Q32 with CI-0004 option) 75Ω video cable 500m max. length
Serial RS232/422: 1 as standard (additional port on Q32 with CI-0001 or CI-0004 option) D9 female

Power:
Supply: Auto ranging 100 to 240V AC 50/60Hz
Power: Consumption 25W
Backup: Optional with alarm output

Physical:
Height:
Q16: 1RU = 44mm (1.75" nom.)
Q32: 2RU = 88mm (3.5" nom.)
Depth: 485mm (19" nom.)
Weight:
Q16: 5.5kg
Q32: 6.7kg
Width: 19" rack mount
Signal Connectors: D50 multi-pole connectors
Operating Temp: 0-40°C
Ventilation: Natural convection

Ordering Information

Each frame ships with a single power supply as standard.

Q16-1608-RR+2P	16x8 Relay Router 2 pole
Q32-1608-RR+2P	16x8 Relay Router 2 pole
Q32-1616-RR+2P	16x16 Relay Router 2 pole

Ordering Options

+4P	4 pole option
+2PS	Redundant power supply (Q32 only)
CI-0001	Sub-module that enables a second RS232/422 serial port Note: only available on Q32 frames
CI-0004	Multi Q-Link Card (Fits inside frame to add up to three Q-Link ports and one RS232/422 port) Note: only available on Q32 frames
AK-0002	Rear frame support kit for Q16, strongly recommended for mobile applications
AK-0006	D50 mating connectors, all male type, one required for each group of 16 inputs or outputs
AK-0008	16 way XLR breakout panel, Male, 1RU. Includes 3m flying lead with D50 connector pre-wired for connection to Quartz relay routers
AK-0009	16 way XLR breakout panel, Female, 1RU. Includes 3m flying lead with D50 connector pre-wired for connection to Quartz relay routers

TR-3200A

Tally Data Routers

The TR-3200A Tally router is used in conjunction with a video or audio router. It routes tally inputs from, for example, a vision mixer and processes them according to the current settings of the main signal router.

The Tally router provides up to 32 tally outputs to feed tally or cue lights on cameras, called reverse tally, or Under Monitor Displays (UMDs), called forward tally. The TR-3200A supports serial tallies from a variety of vision mixers.

Features & Benefits

Configuration
The TR-3200A is housed in a 1RU frame.

Four 16 input ports are used to read up to 64 tally inputs. They are processed by software in conjunction with the current matrix settings to provide 32 tally outputs to feed camera tally or cue lights using relay contacts; two wires are provided for each relay to ensure electrical isolation from the outside world and between individual relays.

Control
TR-3200A includes, as standard, an internal FU-0003 Controller module which supports a single Q-Link and Serial port on the rear of the router. The optional internal CI module can be fitted to the TR-3200A to increase the number of Q-Link and Serial ports.

The TR-3200A has a number of control options, they are:

Local Control Panels The CP-1600A-LP, can be fitted to the TR-3200A.

Passive Remote Control Panels The CP-1601A-P and CP-1604-P passive remote control panels can be fitted to the TR-3200A router via a PI-1604 or PI-1608 parallel interface.

Remote Control Panel Any panel(s) from the entire range of Quartz remote control panels can be used with the TR-3200A router connected via Q-Link.

External third party control The TR-3200A router can be remotely controlled via an external third party control device, such as an automation system, when connected to the routers serial port.

Expansion
Two TR-3200A Tally routers can be used together to form a 64x64 tally router by looping the mixer tallies to both units.

Power Supply
The power supply for the TR-3200A is internal. A redundant power supply can not be fitted to the TR-3200A.

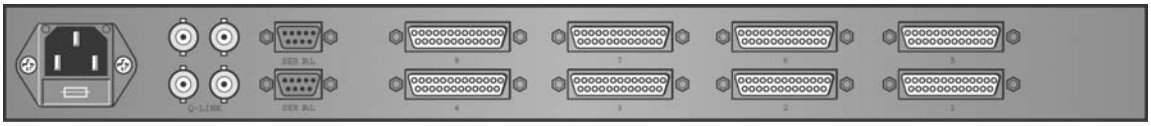

Specifications

Read Ports (Inputs):

Input:	< 0.8V for logic low > 3.5V or open circuit for logic high
Connectors:	D25 female Four for inputs, each with 16 lines

Tally Ports (Outputs):

Normally open contacts:	Gold over silver palladium
Contact resistance:	1Ω max.
Operate/Release time:	10ms max.
Contact rating:	0.5A @ 24V, DC resistive load 0.15A @ 100V rms. AC
Service Life:	1.0x106 at low load 0.5x106 at full load
Connectors:	D25 female Four for outputs, each with 8 relays

Control:

Q-link to remote panels:	1 as standard (additional 3 Q-links with CI-0004 option) 75Ω video cable 500m max. length
Serial RS232/422:	1 as standard (additional port with CI-0001 or CI-0004 option)

Power:

Supply:	100-132V, 180-240V, 50/60Hz
Consumption:	15W

Physical:

Height:	1RU, 44mm (1.75" nom.)
Width:	19" rack mount
Depth:	11" (280mm)
Weight:	2.5kg
Operating Temp:	0-40°C
Ventilation Natural:	convection

Ordering Information

Please refer to Application Note AN-0010 for further information on the operation of the TR-3200A Tally Router.

TR-3200A	64x32 Tally Router, 1RU unit, relay tally outputs

Ordering Options

AK-0005	Mating D25 Connectors, all male type, one required for each port, eight needed for full system.
CI-0001	Sub-module that enables a second RS232/422 serial port.
CI-0004	Multi Q-Link Card (Fits inside frame to add up to three Q-Link ports and one RS232/422 port)

The CP-1000A control panel features assignable and dynamic LCD button technology. Each of the LCD buttons is capable of displaying a multiple character text string, graphics, different language characters or custom characters. The CP-1000A has 16 buttons offering 256 virtual buttons - allowing selection from up to 256 sources with just two key strokes.

The CP-1000A panel is ideal in applications where changes to sources and destinations are needed regularly e.g. OB trucks or other applications where you need to pre-configure panels to suit different or recurring tasks.

Alternatively, it can be configured with a menu structure to allow quick navigation through the system. When a menu button is pressed, some or all of the buttons change their function and legend. Their operation is then defined by the configuration setup for this menu.

Individual panel settings can be saved in WinSetup with the display changing instantly to the new configuration as soon as the download is complete. The panels represent a radical departure in control panel design resulting in the most flexible control panel on the market today.

Features & Benefits

- Flexible feature or menu driven configurations providing quick and simple access
- Easily reconfigured for regularly changing environments
- Each LCD display features a 32x24 dot matrix capable of supporting three rows of five character text or a graphic
- Each LCD illumination can be red, green or yellow with a two level programmable intensity providing unprecedented visual indication of the button status
- Fully programmable button operation - user-definable via WinSetup configuration software
- Button-per-source selection with Page mode NEXT and LAST buttons to select more sources
- LOCK or ENABLE button to protect against unauthorized or accidental selection
- Buttons can be programmed for breakaways or to give a menu structure to the panel
- Camera joystick override on any eight inputs, with momentary or latching action

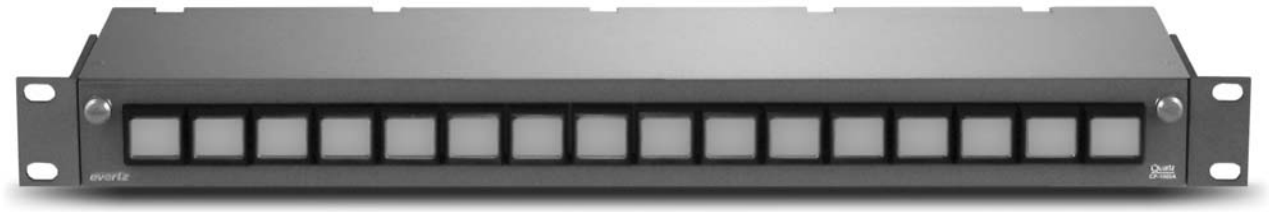

Specifications

Control:
Q-link to remote panels:
75Ω video cable 500m max. length
Serial RS232/422 (Optional):
D9 female
Parallel (Joystick override):
D9 male, TTL levels

Power:
Supply: 100-132V, 180-240V, 50/60Hz
Consumption: 15W

Physical:
Height: 1RU, 44mm
Width: 19" rack mount
Depth: 130mm
Weight: 1.85kg
Operating Temp: 0-40°C

Ordering Information

Note: These part numbers refer to the hardware only. Precise operation is determined by the configuration of the control panel.

CP-1000A	Intelligent Remote Panel, 1RU 16 buttons

Ordering Options

CI-0003	RS232/422 Interface (Enables the serial port and is fitted inside the panel)
+S7	Serial Interface & Protocol

CP-1600A, CP-1601A

Remote Control Panels

The CP-1600A is intended to be a cost effective panel for small systems. As with all Quartz panels, the buttons are individually programmable for functions such as source selection, destination selection, breakaways and locks, etc. The CP-1600A is typically used to control 16 sources and 16 destinations with four levels of breakaway and is neatly packaged in just 1RU of rack space. A version is also available as a local panel which fits onto the front of most standard Quartz 1RU router frames. The CP-1600A supports up to four levels of breakaway.

The CP-1601A is a simple 1RU panel intended as an entry level low cost panel for small systems. As with all Quartz panels the buttons are individually programmable for functions such as source selection, destination selection, breakaways and locks, etc. This ensures maximum flexibility of the system. The most common use is as a single destination 16 button-per-source input panel.

Features & Benefits

- Fully programmable buttons to operate in a variety of modes, e.g. as 16x16 XY
- Button-per-source selection of 16 inputs
- Lock or Enable button to protect against unauthorized or accidental selection
- Buttons can be programmed for breakaways
- Push buttons with a quality action and red LED
- Slide-in designation strip for name legending
- Camera joystick override on any eight inputs, with momentary or latching action

Additional CP-1600A Features

- XY panel, programmable to control from one through 16 destinations with breakaway
- Single destination mode with breakaways
- Dual seven segment display shows current destination number
- Four levels of breakaway available
- Lock facility protects against accidental or unauthorized selections
- Chop mode for continuous toggle between any two sources

Specifications

Control:
Q-link to remote panels:
75Ω video cable, 500m max. length
Serial RS232/422 (Optional):
D9 female
Parallel (Joystick override):
D9 male, TTL levels

Power:

Supply:	100-132V, 180-240V, 50/60Hz
Power:	10W

Physical:

Height:	1RU, 44mm (1.75" nom.)
Width:	19" rack mount
Depth:	130mm (5" nom.)
Weight:	1.50kg (3.3lb)
Operating Temp:	0-40°C

Ordering Information

Note: These part numbers refer to the hardware only. Precise operation is determined by the configuration of the control panel.

CP-1600A	Remote Mini XY Panel, BPS.
CP-1600A-LP	Local Mini XY Panel, BPS. Supplied for use as a front panel on most 1RU frames
CP-1601A	Remote Panel, multi-mode 16 BPS and Lock
CP-1601A-LP	Local Passive Panel, 16 BPS and Lock Supplied for use as a front panel on Q1601, Q1602 or with PI-1604/08
CP-1601A-P	Remote Passive Panel, 16 BPS and Lock (Has integral rack ears for 19" rack mounting, connects via D25 cable) Generally used with the Q1601 and PI-1604/08

Ordering Options

CI-0003	RS232/422 Interface (Enables the serial port and is fitted internal to the panel)
+S7	Serial Interface & Protocol

The CP-1604 is a versatile programmable panel with 20 illuminated push buttons. A wide range of panel operations including XY and multi-destination may be configured using the WinSetup software.

Buttons can be individually configured for any combination of source, destination, breakaway or control function. For instance, this panel can be configured as a 16 button-per-source panel leaving four buttons for breakaways, lock, destinations, etc.

Features & Benefits

- 15mm square buttons suitable for film legends with green LED illumination, uniform over whole legend surface
- Buttons with high quality positive action
- All panels are fully programmable to operate in a number of modes
- Buttons can be programmed for breakaways
- Program/Preview/Take mode can be programmed, emulating vision mixer operation, useful in transmission environments
- Optional Lock button protects against accidental or unauthorized selections
- Camera joystick override on any eight inputs, with momentary or latching action

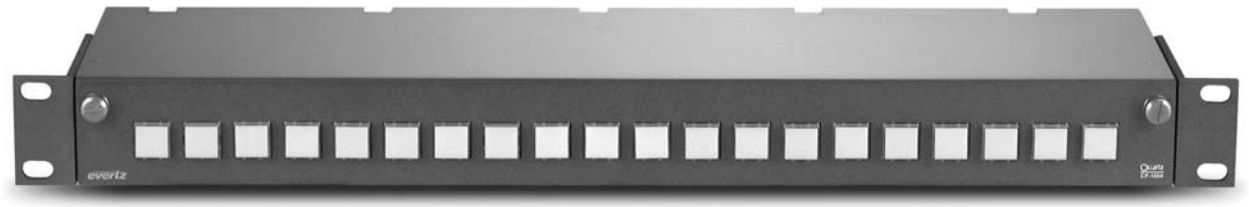

Specifications

Control:
Q-link to remote panels:
75Ω video cable 500m max. length
Serial RS232/422 (Optional):
D9 female
Parallel (Joystick override):
D9 male, TTL levels

Power:
Supply: 100-132V, 180-240V, 50/60Hz
Power Consumption:
10W

Physical:
Height: 1RU, 44mm (1.75" nom.)
Width: 19" rack mount
Depth: 130mm (5" nom.)
Weight: 1.50kg (3.3lb)
Operating Temp: 0-40°C

Ordering Information

Note: These part numbers refer to the hardware only. Precise operation is determined by the configuration of the control panel.

CP-1604	Remote Panel, multi-mode, 20 button-per-source

Ordering Options

CI-0003	RS232/422 Interface (Enables the serial port and is fitted inside the panel)
+S7	Serial Interface & Protocol

CP-2024A

Remote Control Panel

The CP-2024A features assignable and dynamic LCD button technology. Each of the LCD buttons is capable of displaying a multiple character text string, graphics, different language characters or custom characters. The CP-2024A panel has 32 buttons laid out with a keypad section in the style of a traditional XY panel.

The CP-2024A is ideal in applications where changes to sources and destinations are needed regularly e.g. OB trucks or other applications where you need to pre-configure panels to suit different or recurring tasks.

Alternatively, the panels can be configured with a menu structure to allow quick navigation through the system. When a menu button is pressed some or all of the buttons change their function and legend. Their operation is then defined by the configuration setup for this menu.

Individual panel settings can be saved in WinSetup with the display changing instantly to the new configuration as soon as the download is complete. The panels represent a radical departure in control panels design resulting in the most flexible control panel on the market today.

Features & Benefits

- Flexible feature or menu driven configurations providing quick and simple access
- Easily reconfigured for regularly changing environments
- Each LCD display features a 32x24 dot matrix capable of supporting three rows of five character text or a graphic
- Each LCD illumination can be red, green or yellow with a two level programmable intensity providing unprecedented visual indication of the button status
- Fully programmable button operation - user-definable via WinSetup configuration software
- Button-per-source selection with Page mode NEXT and LAST buttons to select more sources
- LOCK or ENABLE button to protect against unauthorized or accidental selection
- Buttons can be programmed for breakaways or to give a menu structure to the panel
- Camera joystick override on any eight inputs, with momentary or latching action

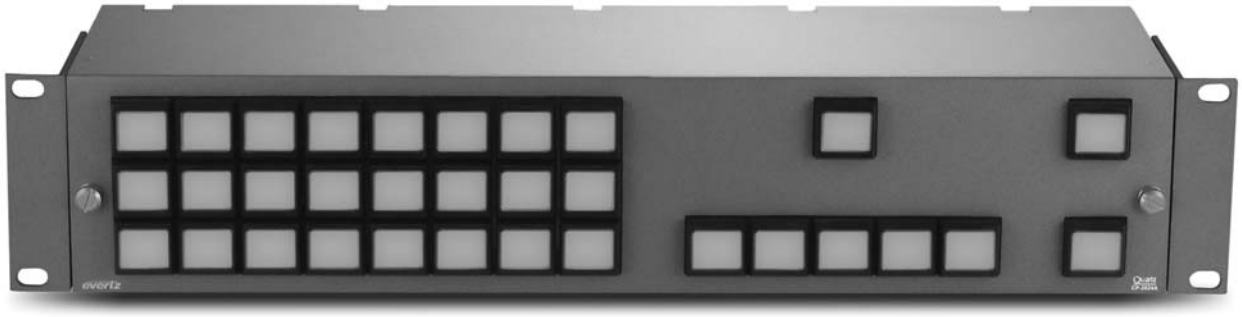

Specifications

Control:
Q-link to remote panels:
75Ω video cable 500m max. length
Serial RS232/422 (Optional):
D9 female
Parallel (Joystick override):
D9 male, TTL levels

Power:
Supply: 100-132V, 180-240V, 50/60Hz
Consumption: 15W

Physical:
Height: 2RU, 88mm
Width: 19" rack mount
Depth: 130mm
Weight: 3.70kg
Operating Temp: 0-40°C

Ordering Information

Note: These part numbers refer to the hardware only. Precise operation is determined by the configuration of the control panel.

CP-2024A	Intelligent Remote Panel, 2RU 24 buttons, keypad style

Ordering Options

CI-0003	RS232/422 Interface (Enables the serial port and is fitted inside the panel)
+S7	Serial Interface & Protocol

The CP-2032A features assignable and dynamic LCD button technology. Each of the LCD buttons is capable of displaying a multiple character text string, graphics, different language characters or custom characters. The CP-2032A panel has 32 buttons laid out in two 16 button rows.

These panels are ideal in applications where changes to sources and destinations are needed regularly e.g. OB trucks or other applications where you need to pre-configure panels to suit different or recurring tasks.

Alternatively, the panels can be configured with a menu structure to allow quick navigation through the system. When a menu button is pressed some or all of the buttons change their function and legend. Their operation is then defined by the configuration setup for this menu.

Individual panel settings can be saved in WinSetup with the display changing instantly to the new configuration as soon as the download is complete. The panels represent a radical departure in control panels design resulting in the most flexible control panel on the market today.

Features & Benefits

- Flexible feature or menu driven configurations providing quick and simple access
- Easily reconfigured for regularly changing environments
- Each LCD display features a 32x24 dot matrix capable of supporting three rows of five character text or a graphic
- Each LCD illumination can be red, green or yellow with a two level programmable intensity providing unprecedented visual indication of the button status
- Fully programmable button operation - user-definable via WinSetup configuration software
- Button-per-source selection with Page mode NEXT and LAST buttons to select more sources
- LOCK or ENABLE button to protect against unauthorized or accidental selection
- Buttons can be programmed for breakaways or to give a menu structure to the panel
- Camera joystick override on any eight inputs, with momentary or latching action

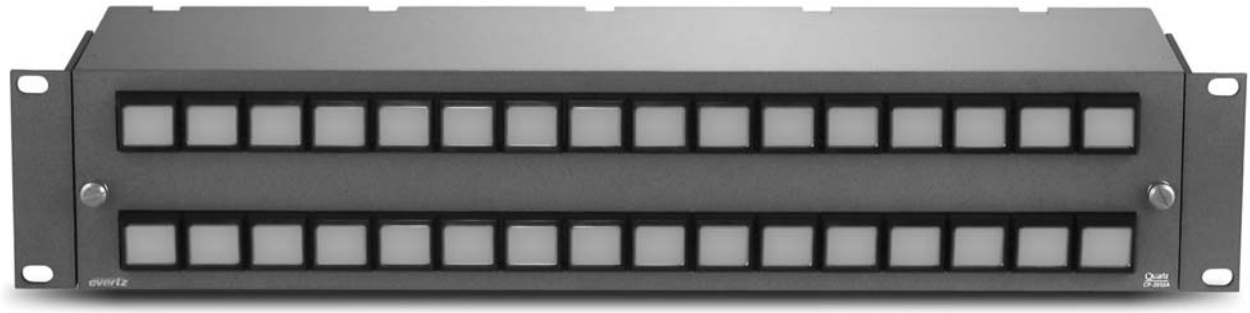

Specifications

Control:
Q-link to remote panels:
75Ω video cable 500m max. length
Serial RS232/422 (Optional):
D9 female
Parallel (Joystick override):
D9 male, TTL levels

Power:
Supply: 100-132V, 180-240V, 50/60Hz
Consumption: 15W

Physical:
Height: 2RU, 88mm
Width: 19" rack mount
Depth: 130mm
Weight: 3.70kg
Operating Temp: 0-40°C

Ordering Information

Note: These part numbers refer to the hardware only. Precise operation is determined by the configuration of the control panel.

CP-2032A	Intelligent Remote Panel, 2RU 32 buttons

Ordering Options

CI-0003	RS232/422 Interface (Enables the serial port and is fitted inside the panel)
+S7	Serial Interface & Protocol

CP2048A

Remote Control Panel

The CP-2048A features assignable and dynamic LCD button technology. Each of the LCD buttons is capable of displaying a multiple character text string, graphics, different language characters or custom characters. The CP-2048A panel has 48 buttons arranged in three rows of 16.

These panels are ideal in applications where changes to sources and destinations are needed regularly e.g. OB trucks or other applications where you need to pre-configure panels to suit different or recurring tasks.

Alternatively, the panels can be configured with a menu structure to allow quick navigation through the system. When a menu button is pressed some or all of the buttons change their function and legend. Their operation is then defined by the configuration setup for this menu.

Individual panel settings can be saved in WinSetup with the display changing instantly to the new configuration as soon as the download is complete. The panels represent a radical departure in control panels design resulting in the most flexible control panel on the market today.

Features & Benefits

- Flexible feature or menu driven configurations providing quick and simple access
- Easily reconfigured for regularly changing environments
- Each LCD display features a 32x24 dot matrix capable of supporting three rows of five character text or a graphic
- Each LCD illumination can be red, green or yellow with a two level programmable intensity providing unprecedented visual indication of the button status
- Fully programmable button operation - user-definable via WinSetup configuration software
- Button-per-source selection with Page mode NEXT and LAST buttons to select more sources
- LOCK or ENABLE button to protect against unauthorized or accidental selection
- Buttons can be programmed for breakaways or to give a menu structure to the panel
- Camera joystick override on any eight inputs, with momentary or latching action

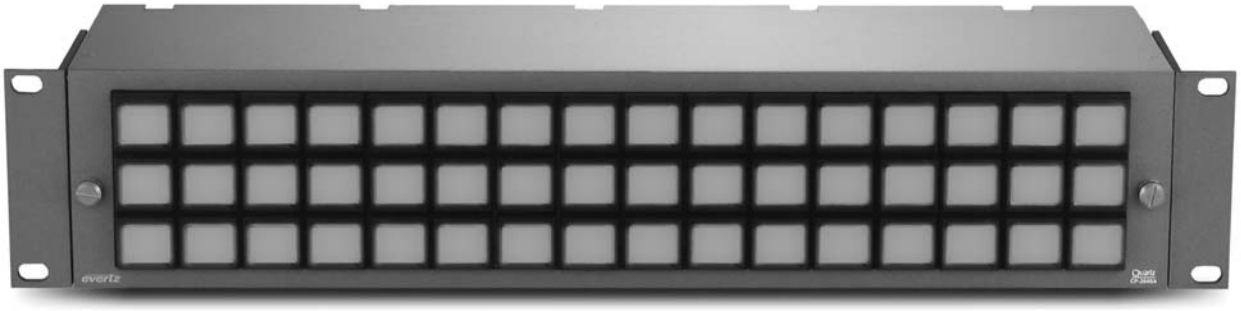

Specifications

Control:
Q-link to remote panels:
75Ω video cable 500m max. length
Serial RS232/422 (Optional):
D9 female
Parallel (Joystick override):
D9 male, TTL levels

Power:
Supply: 100-132V, 180-240V, 50/60Hz
Consumption: 15W

Physical:
Height: 2RU, 88mm
Width: 19" rack mount
Depth: 130mm
Weight: 3.70kg
Operating Temp: 0-40°C

Ordering Information

Note: These part numbers refer to the hardware only. Precise operation is determined by the configuration of the control panel.

CP-2048A	Intelligent Remote Panel, 2RU 48 buttons

Ordering Options

CI-0003	RS232/422 Interface (Enables the serial port and is fitted inside the panel)
+S7	Serial Interface & Protocol

The CP-2402 is the latest panel to be introduced into Quartz's extensive range of remote and local router control panels. The CP-2402 is a versatile programmable panel with 29 illuminated pushbuttons and two display windows. The CP-2402 is available as a Remote Control Panel and can be used on any of the Quartz routers or as a local panel for the Topaz family of routers.

The CP-2402 is fully programmable and therefore the operation of the panel is entirely dependent upon its configuration. It can be configured in a number of different ways including XY and multi-destination. The CP-2402 is configured using the WinSetup software. Each button can be individually configured for any combination of source, destination, breakaway or control functions.

The physical button layout of the CP-2402 guides its configuration but does not restrict it. For example, the left hand block of 24 buttons can be programmed as sources. A number of these buttons can also be used for other functions such as level selection, lock etc. The two display windows can be used to show the current selected destination and the selected source. The two buttons located next to the display windows can be used to scroll up or down through the source or destination list. The take button confirms the selection.

Features & Benefits

- 1RU panel with internal power supply
- 15mm LED illuminated square buttons suitable for film legends
- Buttons with high quality positive action
- Fully programmable to operate in a number of modes
- Buttons can be programmed for breakaways, level selection etc.
- Optional lock button protects against accidental or unauthorized selections
- Camera joystick override on any eight inputs with momentary or latching action

CP-2402 Remote Control Panel

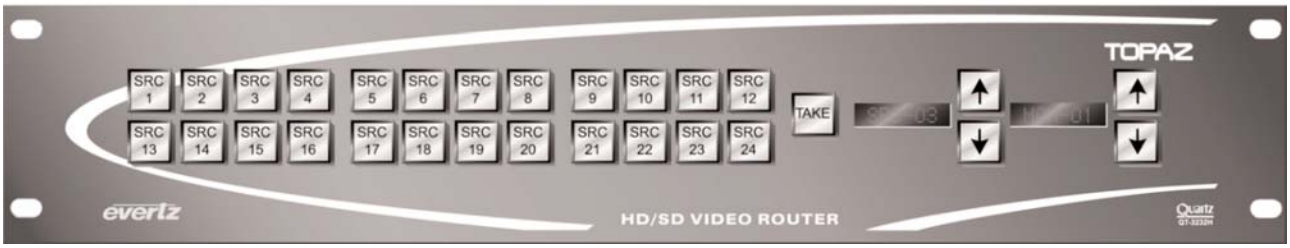

CP-2402-LP Local Control Panel for Topaz

Specifications

Control (Remote Panel Only)
Q-link
Serial RS232/422 (Optional)
Parallel - Joystick override

Power (Remote Panel Only):
Supply: 90-132V, 180-264V, 50/60Hz
Power Consumption: 10W

Physical (Remote Panel Only):
Height: 1RU, 44mm
Width: 19" rack mount
Depth: 130mm
Weight: 1.55kg
Operating Temperature: 0-40°C

Ordering Information

CP-2402	Remote Control Panel
CP-2402-LP	Local Control Panel

CP-3200A

Remote Control Panel

The CP-3200A is a keypad panel normally arranged to operate as an XY panel allowing control of any input or output, with up to four levels of breakaway. The CP-3200A is normally used as a master XY panel in engineering or MCR type applications where access to any input or output is required. The CP-3200A is suitable for any system from 16x4 and above.

Advanced programming control enables the CP-3200A also to be configured to control five destinations without breakaway or a single destination with five levels of breakaway.

Features & Benefits

- XY mode with four levels of breakaway
- Five destination mode with a TAKE button for each destination but without breakaways
- Single destination mode with five levels of breakaway
- 24 + 6 button keypad for source and destination names
- High brightness vacuum fluorescent alphanumeric display with better viewing angles than LCD types
- Source names can be up to seven characters long
- Destination names can be up to eight characters long
- In use displays for all levels plus preset
- All buttons fully programmable for different functions such as LOCK
- TAKE button optionally causes the source in use and preset displays to toggle
- Optional NEXT and LAST buttons to scroll through the available sources and destinations
- Optional CHOP button for continuous toggle between sources, for line-up purposes
- Optional Preview mode causes a destination to switch when a valid source name is entered in the preset display (Available on any or all destinations)
- Camera joystick override on any eight inputs, with momentary or latching action
- Programmable display brightness with optional sleep mode

Specifications

Control:
Q-link to remote panels:
75Ω video cable 500m max. length
Serial RS232/422 (Optional):
D9 female
Parallel (Joystick override):
D9 male, TTL levels

Power:
Supply: 100-132V, 180-240V, 50/60Hz
Consumption: 10W

Physical:
Height: 2RU, 88mm (3.5" nom.)
Width: 19" rack mount
Depth: 130mm (5" nom.)
Weight: CP-3200A: 2.45kg (5.4lb)
Operating Temperature:
0-40°C

Note: These part numbers refer to the hardware only. Precise operation is determined by the configuration of the control panel.

Ordering Information

CP-3200A	Remote Panel with keypad and display

Ordering Options

CI-0003	RS232/422 Interface (Enables the serial port and is fitted inside the panel)
+S7	Serial Interface & Protocol

The CP-3201 has 40 illuminated push buttons and is ideal for systems with 32 sources leaving eight buttons to select destinations, breakaways and lock, etc.

Alternatively, it can be programmed with 16 source buttons and 16 destination buttons to provide an XY panel suitable for small systems using the WinSetup software.

Features & Benefits

- 15mm square buttons suitable for film legends with green LED illumination, uniform over whole legend surface
- Buttons with high quality positive action
- All panels are fully programmable to operate in a number of modes
- Split panels can be programmed in many ways, for instance, permitting two separate destinations to be controlled using two rows of source buttons
- Buttons can be programmed for breakaways
- Program/Preview/Take mode can be programmed, emulating vision mixer operation, useful in transmission environments
- Optional Lock button protects against accidental or unauthorized selections
- Camera joystick override on any eight inputs, with momentary or latching action

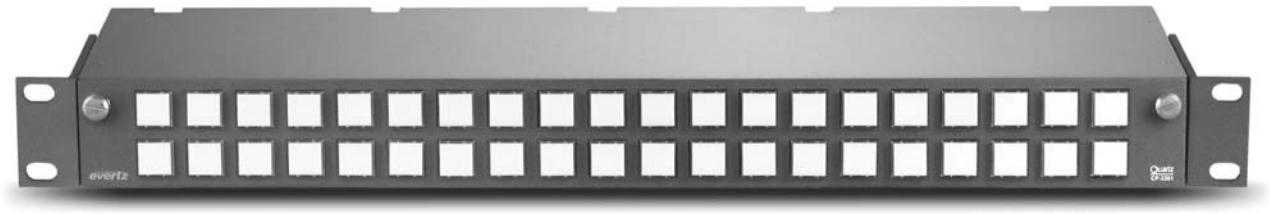

Specifications

Control:
Q-link to remote panels:
75Ω video cable 500m max. length
Serial RS232/422 (Optional):
D9 female
Parallel (Joystick override):
D9 male, TTL levels

Power:
Supply: 100-132V, 180-240V, 50/60Hz
Consumption: 10W

Physical:
Height: 1RU, 44mm (1.75" nom.)
Width: 19" rack mount
Depth: 130mm (5" nom.)
Weight: 3.4lb (1.55kg)
Operating Temp: 0-40°C

Ordering Information

Note: These part numbers refer to the hardware only. Precise operation is determined by the configuration of the control panel.

CP-3201	Remote Panel, multi-mode, 40 Button-per-source
CP-3201-P	Passive Panel, multi-mode, 40 Button-per-source (Has integral rack ears for 19" rack mounting, connects via D25 cable. Generally used with the PI-1604/08A)

Ordering Options

CI-0003	RS232/422 Interface (Enables the serial port and is fitted inside the panel)
+S7	Serial Interface & Protocol

CP-3208

Remote Control Panel

The CP-3208 is an eight destination control panel that can handle up to 32 sources. It is ideal in applications such as monitoring or live operational areas, where several destinations are to be controlled rapidly with a single button selection.

The status of each destination is visible at all times for increased operational confidence.

Features & Benefits

- Eight displays show the current source selected to each destination
- High brightness, green LED displays with up to seven character names
- 32 buttons for source selection and eight TAKE buttons for the destinations
- TAKE button can optionally be cleared or retain the last source selection
- 15mm square buttons suitable for film legends with green LED illumination, uniform over whole legen surface
- Optional LOCK button protects against accidental or unauthorized selections
- Optional Preview mode causes destination to switch when a source button has been selected but before a TAKE has been made (available on any or all destinations)
- Camera joystick override on any eight inputs, with momentary and latching action
- Optional VTR control buttons for <<, >>, > and STOP (requires CI-0003)

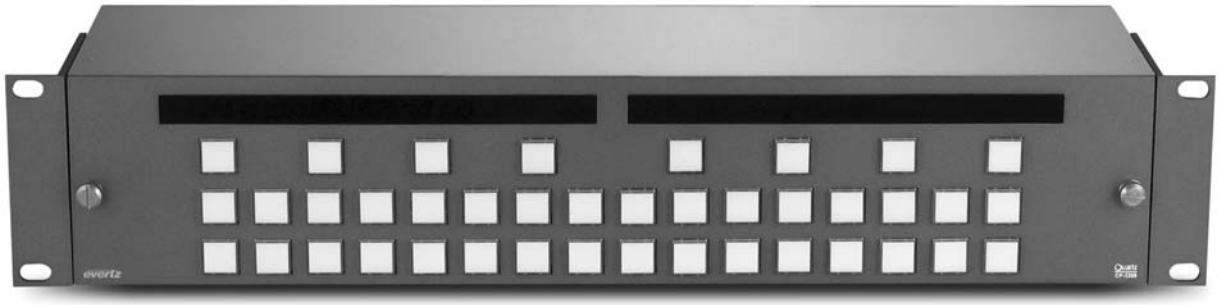

Specifications

Control:
Q-link to remote panels:
75Ω video cable 500m max. length
Serial RS232/422 (Optional):
D9 female
Parallel (Joystick override):
D9 male, TTL levels

Power:
Supply: 100-132V, 180-240V, 50/60Hz
Consumption: 10W

Physical:
Height: 2RU, 88mm (3.5" nom.)
Width: 19" rack mount
Depth: 130mm (5" nom.)
Weight: 2.55kg (5.6lb)
Operating Temp: 0-40°C

Ordering Information

Note: These part numbers refer to the hardware only. Precise operation is determined by the configuration of the control panel.

CP-3208	Remote Panel, eight destination, 32 Button-per-source with source display for each destination

Ordering Options

CI-0003	RS232/422 Interface (Enables the serial port and is fitted inside the panel)
+S7	Serial Interface & Protocol

The CP-6400 is an advanced XY panel ideal for larger applications above 64x64 but can be used with any Quartz router. It is typically used as a master panel to control any input or output, with up to eight levels of breakaway.

Its extra large keypad and eight character names provide great flexibility to name sources and destinations in larger systems. Flexible architecture permits any key to be programmed to provide any function.

Features & Benefits

- Eight large keypad with 32 buttons
- EIght character names on high brightness green LED displays
- Progrmmable display brightness
- Up to eight levels of breakaway supported
- All buttons are fully programmable for different functions
- Present and in-use displays to help avoid false selections
- TAKE button optionally causes the source in use and preset displays to toggle, to reverse false selections
- Optional LOCK button protects against accidental or unauthorized selections
- Optional NEXT and LAST buttons to scan the available sources and destinations
- Optional CHOP button for continuous toggle between sources, for line-up purposes
- Camera joystick override on any eight inputs, with momentary and latching latching action

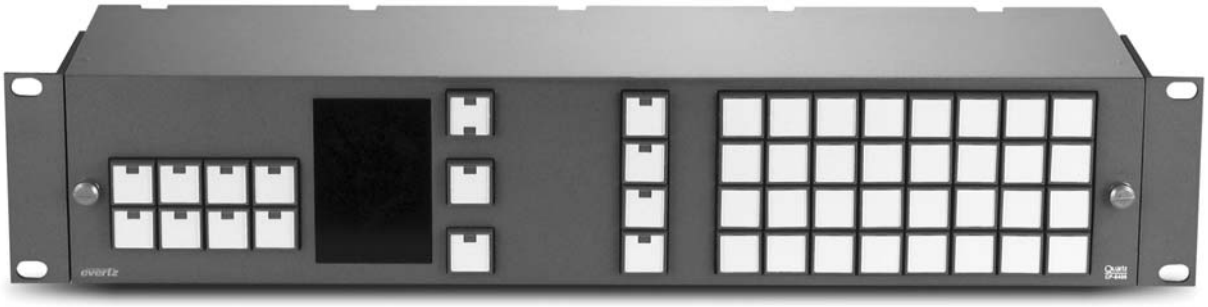

Specifications

Control:

Q-link to remote panels:	75Ω video cable 500m max. length
Serial RS232/422 (Optional):	D9 female
Parallel (Joystick override):	D9 male, TTL levels

Power:

Supply:	100-132V, 180-240V, 50/60Hz
Power Consumption:	10W

Physical:

Height:	2RU, 88mm (3.5" nom.)
Width:	19" rack mount
Depth:	130mm (5" nom.)
Weight:	2.45kg (5.4lb)
Operating Temp:	0-40°C

Ordering Information

Note: These part numbers refer to the hardware only. Precise operation is determined by the configuration of the control panel.

CP-6400	Remote Display Panel, XY, keypad

Ordering Options

CI-0003	RS232/422 Interface (Enables the serial port and is fitted inside the panel)
+S7	Serial Interface & Protocol

CP-6401

Remote Control Panel

The CP-6401 has 80 illuminated push buttons and is ideal for 64 input systems, needing selection of the source with a single button press.

Alternatively, it can be used as an XY panel for systems up to 32x32 using the WinSetup software.

Features & Benefits

- 15mm square buttons suitable for film legends with green LED illumination, uniform over whole legend surface
- Buttons with high quality positive action
- All panels are fully programmable to operate in a number of modes
- Split panels can be programmed in many ways, for instance, permitting two separate destinations to be controlled using two rows of source buttons
- Buttons can be programmed for breakaways
- Program/Preview/Take mode can be programmed, emulating vision mixer operation, useful in transmission environments
- Optional Lock button protects against accidental or unauthorized selections
- Camera joystick override on any eight inputs, with momentary or latching action

Specifications

Control:

Q-link to remote panels:	75Ω video cable 500m max. length
Serial RS232/422: (Optional):	D9 female
Parallel: (Joystick override):	D9 male, TTL levels

Power:

Supply:	100-132V, 180-240V, 50/60Hz
Power Consumption:	10W

Physical:

Height:	2RU, 88mm (3.5" nom.)
Width:	19" rack mount
Depth:	130mm (5" nom.)
Weight:	2.45kg (5.4lb)
Operating Temp:	0-40°C

Ordering Information

Note: These part numbers refer to the hardware only. Precise operation is determined by the configuration of the control panel.

CP-6401	Remote Display Panel, multi-mode, 80 button-per-source

Ordering Options

CI-0003	RS232/422 Interface (Enables the serial port and is fitted inside the panel)
+S7	Serial Interface & Protocol

A selection of multi-destination panels are available for the control of multiple sources to two, four, six or eight destinations. Up to eight levels of breakaway are supported. The LED displays give visible readout of the current source status. The large keypad and eight character names provide great flexibility to name sources and destinations in larger systems. Flexible architecture permits any key to be programmed to provide any function.

The CP-6408 also has a display mode where the preset window becomes the current destination and the source control panels windows are then each associated with up to eight levels.

Features & Benefits

- 24 button keypad
- Four different models, supporting two, four, six or eight destinations
- TAKE button for each destination
- In use display for each destination for easy identification of status
- Eight character names on high brightness green LED displays
- Programmable display brightness
- Up to eight levels of breakaway supported
- All buttons are fully programmable for different functions
- Preset and in use displays to help avoid false selections
- Optional LOCK button protects against accidental or unauthorized selections
- Optional NEXT and LAST buttons to scan the available sources and destinations
- Optional CHOP button for continuous toggle between sources, for line-up purposes
- Camera joystick override on any eight inputs, with momentary and latching action

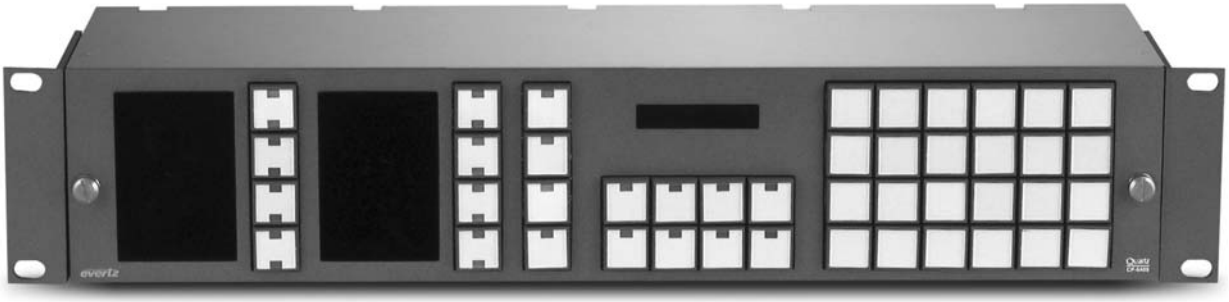

Specifications

Control:

Q-link to remote panels:	75Ω video cable 500m max. length
Serial RS232/422 (Optional):	D9 female
Parallel (Joystick override):	D9 male, TTL levels

Power:

Supply:	100-132V, 180-240V, 50/60Hz
Consumption:	10W

Physical:

Height:	2RU, 88mm (3.5" nom.)
Width:	19" rack mount
Depth:	130mm (5" nom.)
Weight:	2.45kg (5.4lb)
Operating Temp:	0-40°C

Ordering Information

Note: These part numbers refer to the hardware only. Precise operation is determined by the configuration of the control panel.

CP-6402	Remote Panel, two destinations, keypad with displays
CP-6404	Remote Panel, four destinations, keypad with displays
CP-6406	Remote Panel, six destinations, keypad with displays
CP-6408	Remote Panel, eight destinations, keypad with displays

Ordering Options

CI-0003	RS232/422 Interface (Enables the serial port and is fitted internal to the panel)
+S7	Serial Interface & Protocol

SC-500A

System Controller

The SC-500A System Controller is an expandable platform designed to manage all communication and interface requirements for small to medium non-critical routing systems.

Housed in a 1RU frame, the SC-500A System Controller manages the communication between multiple Quartz products and third party equipment. It can also be configured to provide communication translations between Q-Link, F-Link, RS422, RS232 and Ethernet.

The basic SC-500A is fitted with the advanced FU-0018 controller module. There is also an optional sub-module that can be fitted to the SC-500A. This sub-module increases the number of active Q-Link and Serial ports.

The SC-500A is powered from a single external power supply that connects to the frame via a secure bayonet locking connector. A redundant external power supply can also be fitted if required.

Features & Benefits

- Used as a Q-Link Master and/or a protocol converter for Quartz control panels when employed to control third party equipment
- Used as an external port expander to add extra serial and Q-Link ports to a system when there are no spare ports available on the router frame
- Used to distribute control panels among several Q-Link ports in order to provide an additional level of system protection
- Used as an alternative to the larger SC-1000 System Controller when installed into suitable non-critical applications
- Used to provide an Ethernet interface for Quartz products that do not have the option of an Ethernet port
- Used for long distance control of Quartz routers

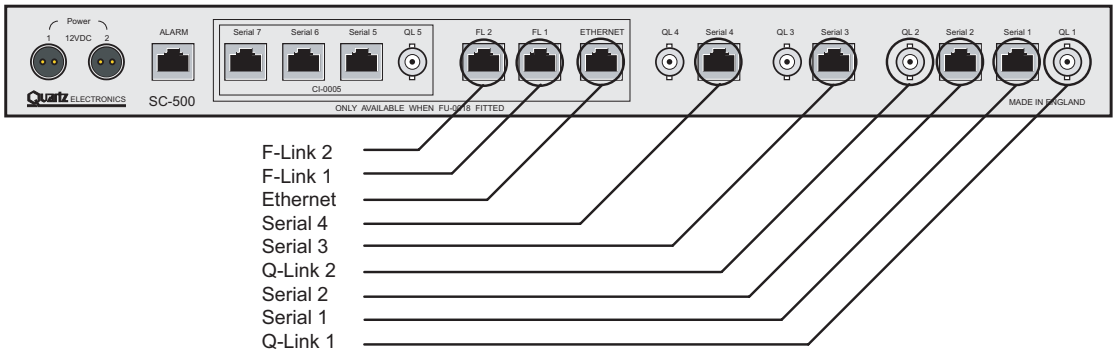

SC-500A Fitted with the FU-0018 Controller Module

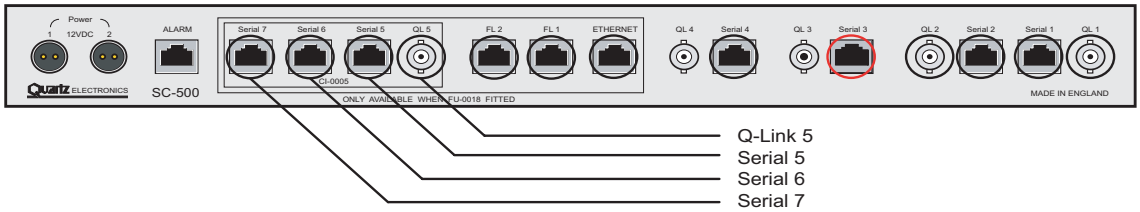

SC-500A Fitted with the FU-0018 Controller Module & CI-0005 Sub-Module

Specifications

Standard Control:

Q-Link	2
F-Link	2
Serial RS232/422	4
Ethernet	1

Power:

Supply:	90-132V, 180-264V, 50/60Hz
Power Consumption:	10W

Physical:

Height:	1RU, 1" (44mm)
Width:	19" rack mount (482mm)
Depth:	5" (130mm)
Weight:	3 lbs (1.55kg)
Operating Temperature:	0-40°C

Ordering Information

SC-500A	System Controller

Ordering Options

CI-0005	Optional Sub-module includes 1-Q-Link and 3-RS422/Rs232 Serial
+PS	Redundant power supply

The SC-1000 System Controller handles the management of the routers as well as providing additional redundancy features. With its Ethernet networking and comprehensive interface connections the SC-1000 provides an expandable platform to manage future communication and interface requirements for very large routing systems.

The SC-1000 occupies a 2RU frame and may be equipped with a single controller and power supply, or two of each for redundancy. Each controller and power supply is individually accessible from the front of the frame and supports hot swapping with no disturbance to the controller that is operating. By using a real-time operating system the SC-1000 has been specifically designed to avoid slow operation and slow boot-up time normally associated with PC based solutions.

The basic unit contains non-volatile memory for the storage of crosspoint settings and a 'flash disk' for the storage of configuration data files. A 3 ½" diskette drive for each controller allows WinSetup configurations to be easily transferred while a networked PC may be connected to the system for virtually unlimited storage.

Via the front panels users may switch between controllers manually, review system status, or select a configuration file stored internally or on a 3 ½" diskette.

A Timecode input card is available as an option enabling accurate switching according to a real-time schedule. Both LTC and VITC are supported.

SNMP support allowing remote monitoring of the SC-1000 core features over an Ethernet link by an external device.

Features & Benefits

- Single controller module, or two for redundancy, with automatic and manual changeover. Supports hot swap and changeover with total transparency
- Single PSU module, or two for redundancy with power sharing for maximum reliability. Supports hot swap
- Supports up to 16 independent routing levels each of 1024x1024
- Supports up to 160 control panels
- Fast boot-up time
- Panels can be re-configured without disturbing the rest of the system
- NVRAM for crosspoint status storage
- Flash disk and 3½" Diskette drive for configuration storage
- Two Q-Link ports as standard, with the option for up to nine more, allows for small groups of panels on each link providing protection against one link being damaged and maintaining high speed
- Four serial ports as standard:
  - Maintenance port - RS232/422 used for downloading configurations and for other engineering functions
  - Modem port - RS232 only, but not restricted to just modem use
  - 2 ports for general purpose use, RS232/422
- Option for up to 3 more ports, RS232/422
- WinSetup can be used to configure for RS232 or RS422 and choose the protocol type on a port-by-port basis
- Ethernet port supporting TCP/IP protocol for configuration file downloading and router control. A separate port for each controller connects providing the ultimate in protection if one controller fails
- Fully supports Quartz WinSetup, WinControl and WinQueue software.
- Support of the SNMP remote monitoring protocol

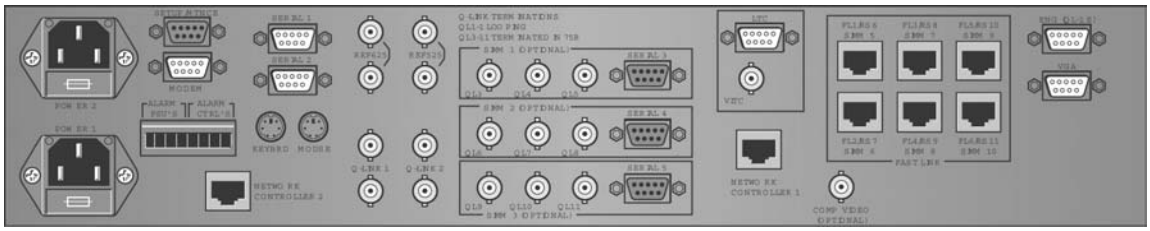

Specifications

User Interface:

Front panel:	20 characters x 4 lines LCD display with back-light. Used with navigation and enter buttons for control of options and viewing diagnostics.
Storage:	
Non-volatile memory:	Used to store route settings, 5 years
Flash Disk:	8Mb as standard, used to store configuration files. Can be upgraded to 144Mb or more.
Diskette:	3 ½" drive for loading or saving configurations and status information.

Connections:

Q-link:	2 as standard, options for 9 more by installing CI-0006 sub-modules, used for connecting to remote panels and Quartz routers. 75Ω video cable 500m max. length
Setup/Maintenance:	RS232/422 selectable, wired to Quartz standard
Modem:	RS232 wired to PC D9 standard (can be used as a serial port)
Serial:	2 as standard, option for 3 more ports. RS232/422 selectable
Network:	Ethernet 10BaseT, TCP/IP protocol, RJ45
ENG:	Special engineering connection for Quartz use, can also be used to interface to a fiber-optic converter for long haul connections
Alarm:	Relay contact pairs from processors and power supplies
Time code:	LTC and VITC supported

Power:

Supply:	Auto ranging 100 to 240V AC 50/60Hz
Power:	Single processor: 30W Dual processor: 60W

Physical:

Height:	2RU, 88mm (3.5" nom.)
Width:	19" rack mount
Depth:	485mm (19" nom.)
Weight:	9kg
Operating temp:	0-40°C
Ventilation:	Fan cooled, air drawn from front exhaust at rear and sides

Ordering Information

SC-1000	System Controller, single processor and single power supply

Each System Controller ships with a single processor and power supply as standard.

Ordering Options

+2PS	Redundant power supply
SC-1000+FU	Main Processor module for system controller, used to upgrade a single processor unit to dual processor or to hold as a spare
SC-1000-QL	CI-0006 Sub-module that plugs inside the SC-1000 to enable three additional Q-Link and one RS232/422 port. Up to 3 modules may be fitted to provide up to 9 extra Q-Links and up to 3 extra serial ports.
SC-1000+TC	Time code sub-module which fits inside the SC-1000
AK-0002	Rear frame support kit, strongly recommended in mobile applications

PI-1604A, PI-1608A

System Controllers

The Quartz Parallel Interface is used to provide interfaces between Quartz routers and equipment requiring parallel rather than serial control e.g. Edit Controllers and custom control panels. The interface is a compact 1RU high 19" rack-mountable unit.

There are two models available supporting four or eight panel ports. The PI-1604A supports four ports and the PI-1608A eight. These units include a serial port as standard and optionally, on the PI-1608A, a second Q-Link and a second serial port.

A typical application of the Parallel Interface is to connect to custom control panels. All Quartz systems use serial communications between the matrix frames and the control panels via a single standard video coaxial cable, called the Q-Link. However, there are times when the standard panels will not fit into a desk or the buttons must be integrated into a common panel with the controls of third party equipment. The Quartz Parallel Interface is designed to meet this requirement.

The other main application offers a low cost solution where several panels are needed in the same area. Here, variants of the front panels of standard panels CP-1601A and CP-1604 are used without their normal cases. They are connected to the Parallel Interface by multi-core or ribbon cable. This is especially useful in situations where space behind the panel mounting surface is strictly limited, for instance in horizontal desks where a standard panel limits knee room.

Each port has 16 lines with read/write capability. Each line can read a button push and/or drive a lamp or LED wired to the button in the traditional button-per-source fashion. Each port also carries power for illumination. Alternatively an external source of power may be used.

Features & Benefits

- Supports custom button-per-source panels
- Supports XY panel operation
- Fully programmable to support for example destination 'hold down' mode (sometimes called two finger enable)
- Supports buttons with LED or 24V bulb status illumination
- Reads GPI signals
- Interfaces to VTR edit controllers with BCD or binary data format
- Joystick override function is supported
- Drives external relays
- Optional second Q-Link port on PI-1608A
- Serial port as standard, plus an optional second port on PI-1608A
- An optional local panel fits to the front of the PI-1604A
- Power supply provides 24V power for lamps or LEDs
- External Power Supply may be used to drive lamps, LEDs or relays

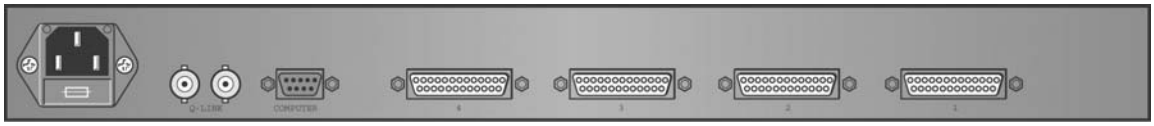

PI-1604A Rear Panel

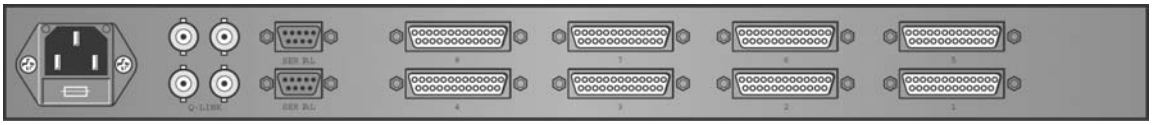

PI-1608A Rear Panel

Specifications

Parallel Ports:

Input:	< 0.8V for logic low > 3.5V or open circuit for logic high
Output Current sink:	With internal power supply 50mA each output, 500mA total per unit. With external power supply 75mA per output, +24V max
Output low Voltage:	1.0V typical

Control:

Q-link:	75Ω video cable 500m max. length
Serial RS232/422:	D9 female

Power:

Supply:	100-132V, 180-240V, 50/60Hz
Consumption:	15W

Physical:

Height:	1RU, 44mm
Width:	19" rack mount
Depth:	220mm
Weight:	
PI-1604:	2.25kg
PI-1608:	2.5kg

Connectors:	D25 female Four on PI-1604A Eight on PI-1608A
Operating Temp:	0-40°C
Ventilation:	Natural convection

Ordering Information

All Quartz routers are equipped with at least one Q-Link port and one RS232/422 serial port as standard, and many have the option for more. Quartz has developed a range of serial interfaces and software protocols to connect to third party equipment such as automation systems, vision mixers, editors, under monitor displays and DVEs.

Plug-in Communication Interfaces, called CI-000x, which fit inside routers or control panels and can be supplied with the initial system or installed later.

CI-000x Serial Interfaces
CI-0001 RS232/422 Serial Interface Card
Enables a second serial port on routers equipped with a second D9 connector.

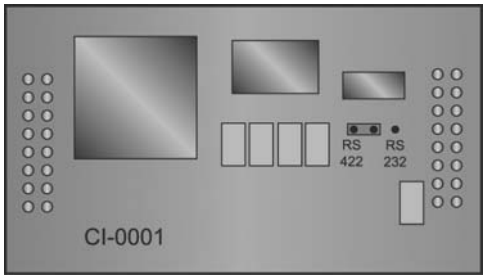

CI-0003 RS232/422 Serial Interface Card
Drives the serial port on remote control panels, for example to provide point-to-point RS422 interface between Quartz panels and third party equipment.

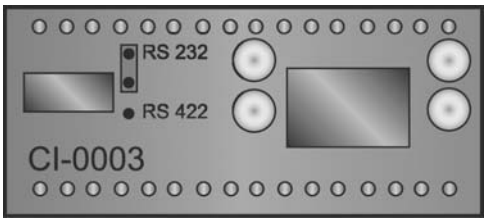

CI-0004 Multi Q-Link Card
Adds one more serial port plus three more Q-Link ports, depending on the number of physical ports fitted to the frame.

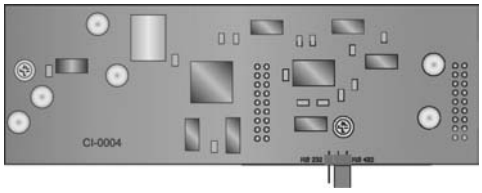

Stand-alone Interfaces, called SI-000x are 1RU rack-mount mains-powered units.

SI-000x Serial Interfaces
SI-0001 Serial Interface Adapter
Adds an extra RS232/422 serial port to a system when there are no spare ports available on the frame(s) or control panel(s). A 1RU rack mounting unit with a Q-Link port and integral power supply. Often used as a platform to handle a third party protocol.

SI-0004 Q-Link Isolator/Repeater
The SI-0004 provides an opto-isolated connection between two sections of Q-Link which eliminates the induced mains hum or earth loops, etc.

The SI-0004 also buffers the primary (incoming) Q-Link signal and passes it through an optically coupled interface to provide a fully isolated secondary Q-Link feed which can then handle a further 500m length of cable. In addition, an RS232/422 port is available on the secondary side of the interface, but this cannot be used at the same time as the secondary Q-Link. The unit fits in a 1RU frame with a single feed of AC power to provide DC power to both halves of the electrical isolated circuitry.

By connecting the RS232/422 port to standard third party fibre-optic interfaces it is possible to use two SI-0004 Isolator/Repeaters to extend the Q-Link messaging over very long distances.

In outside broadcast applications the internal Q-Link can be vulnerable to damage when taken outside the truck. The SI-0004 can be used to isolate and protect the internal section of the Q-link from faults on the external section.

Specifications

Connectivity:

Main Q-Link:	SI-0001 x1, SI-0003 x1
Main RS232/422:	SI-0001 x1
Extra Q-Links:	SI-0004 x1 isolated
Or extra RS232/422:	SI-0004 x1

Physical:

Depth:	SI-0001 - 130mm, SI-0004-130mm
Weight:	SI-0001 - 1.25kg, SI-0004-1.25kg

Common to all:

Operating Temp.:	0-40°C
Height:	1RU, 44mm (1.75" nom.)
Width:	19" rack mount

Power:

Common to all:	
Supply:	100-132V, 180-240V, 50/60Hz
Consumption:	10W

Ordering Information

CI-0001	RS232/422 Serial Interface Card
CI-0001-1	RS232/422 Serial Card Mod
CI-0003	RS232/422 Control Panel Serial Card
CI-0004	Multi Q-Link Card

SI-0001	Serial Interface Adapter
SI-0004	Q-Link Isolator/Repeater

Please specify the protocol required

** Please Note: The SI-0002 Multi-mode Serial Interface has been replaced by the SC-500*

XRF1

1RU 16x16 ROUTER

The XRF1-16x16 is an RF signal routing matrix for L-Band and IF satellite communications signals. Housed in a compact 1RU chassis, the XRF1-16x16 is a full-featured routing matrix with automatic or manual gain control and RF power meters on each input channel, as well as optional LNB power supplies. Advanced capabilities, such as destination and salvo locks ensure secure uninterrupted matrix paths for critical content. Salvos allow multiple matrix path changes with the push of a button.

The XRF1-16x16 is offered with local and/or remote control panel options for crosspoint control and system configuration. Additionally, this flexible routing matrix can be controlled, configured and monitored via serial control and/or SNMP control over Ethernet using Evertz X-NCP2 panel, VistaLINK® or other third party control software.

The XRF1-16x16 may be expanded from a 16x16 matrix to a 32x32 matrix by connecting multiple frames in conjunction with Evertz SRF series passive RF splitters/combiners, providing matrix expansion without compromising system reliability.

Features & Benefits

- Wide passband for extended L-Band and IF applications
- Passes all modulation formats
- Passcode protection for configuration parameters, destination locks, and salvo locks
- Up to 8 programmable salvos
- Internal redundant power supply option
- LNB power generation option with short circuit protection
- Automatic or manual gain control on all input channels
- External system expansion capability up to 32x32 using additional frames and Evertz SRF series passive splitters/combiners
- RF power monitoring on all input channels
- Adjustable output level in AGC mode
- Matrix crosspoint control using local control panel, X-NCP2 remote control panel, VistaLINK®, or 3rd party control software
- System configuration, alarm monitoring, event logging, and email notification available through VistaLINK® or 3rd party control software

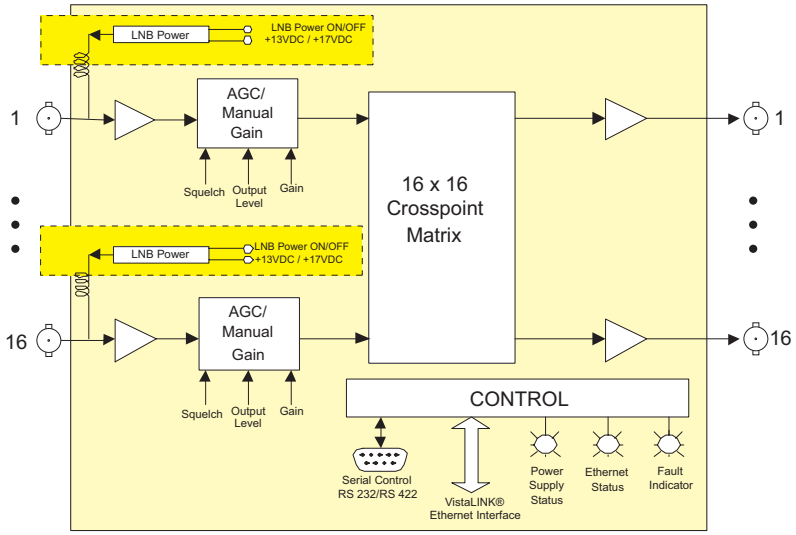

Specifications

System:

Matrix Sizes:	16x16, up to 32x32 using additional routers and splitters/combiners in groups of 16 inputs/outputs
Impedance:	75Ω (50Ω BNC optional)
Connector Type:	BNC per IEC 60169-8 Amendment 2 (F-type connector optional)
Number of Inputs:	16
Number of Outputs:	16
Gain Range (Manual):	-9 to +18dB in 1dB steps
Output AGC Level:	-20 to -50dBm

RF Specifications - L-Band:

Bandwidth:	850 to 2250 MHz*
Freq Response:	±1.5dB over bandwidth ±0.5dB over any 36MHz channel
Isolation:	> 60dB input to output > 70dB output to output, and input to input
RF Input Power:	-10 to -70dBm
Max RF Output Power:	-10dBm
Input P1dB:	+2dBm (1500MHz) typ
OIP3:	+12dBm (1500MHz) typ
Noise Figure:	6dB (1500MHz, Gain = +18dB) typ 20dB (1500MHz, Gain = 0dB) typ
Return Loss:	> 15dB (input and output)

LNB Bias (-LNB Version):

Voltage:	+13VDC/+17VDC ±5% (selectable)
Max. Current:	400mA (overload protected)

RF Specifications - IF:

Bandwidth:	40 to 200MHz*
Frequency Response:	±0.5dB over 50-90MHz and 120-160MHz
Isolation:	> 60dB input to output > 70dB output to output and input to input
RF Input Power:	-15 to -70dBm
Max RF Output Power:	-10dBm
Input P1dB:	-4dBm (70MHz) typ
OIP3:	+10dBm (70MHz) typ
Return Loss:	> 13dB (input), > 15dB (output)

Communication and Control:

Serial:	RS232/RS422 selectable
Ethernet:	SNMP over IEEE 802.3/U (10/100 BaseTx) RJ45 connector
Control:	Local front panel, XNCP2 Network control panel or VistaLINK®

Electrical:

Max Power Consumption:	Auto ranging 100 to 250 V AC, 50/60Hz
AC Input:	40 Watts max. w/o LNB power option 175 Watts max. with LNB power option
Connector:	IEC 60320 - 1 per power supply
Fuses:	1 amp - Standard version 2 amp - LNB version

Compliance:

Safety:	CSA Listed to CSA C22.2 No. 60065-03, UL 60065-03 IEC 60065-(2001-12) 7th Edition Complies with CE Low voltage Directive 93/68/EEC
EMC:	Complies with FCC part 15, Class A Complies with EU EMC directive 89/336/EEC

Physical:

Dimensions:	19"W x 1.75"H x 18.75"D (483mm x 45mm x 477mm)
Weight:	Approx. 9.5lbs. (4.3kg) with 2 power supplies, -LNB version

** All specifications over specified bandwidth unless noted*

Ordering Information

(Sample Systems) *Contact Evertz sales for other matrix sizes and packages*

XRF1-16x16	1RU 16x16 RF Router
XRF1-16x16-LNB	1RU 16x16 RF Router with LNB power supply
PKGXRF1-32x32	32x32 RF Routing System

Ordering Options

+LCP	Local control panel
+2PS	Redundant power supply

Contact Evertz sales for 50Ω BNC and F-Type connector options

The XRF6-64x64 is a modular RF signal matrix for routing and monitoring L-band and IF signals within a satellite communications facility. Built on a modular architecture, all active components are hot-swappable and front-loading, ensuring ease of maintenance and matrix expansion. Advanced features such as automatic gain control, salvo operations, monitoring, and alarm reporting of critical signal parameters such as input signal presence and signal level provide flexible RF signal management.

The XRF6-64x64 is offered with the X-NCP2 remote control panel option for crosspoint control and system configuration. Additionally, this flexible routing matrix can be controlled, configured, and monitored via serial control and/or SNMP control over Ethernet, using Evertz VistaLINK® or other monitoring and control software.

The XRF6-64x64 houses up to a 64x64 routing matrix within a 6RU chassis. Matrix sizes range from 16x16 to 64x64 in increments of 16 inputs and outputs, within one frame. External expansion to 512x512 is available with the addition of multiple frames and Evertz SRF series passive splitters/combiners. Input cards and output cards can be added independently for non-square matrix sizes. High reliability is ensured by low component count per signal path, optional dual power supplies, and redundant system controllers.

Features & Benefits

- Wide bandwidth passes extended L-Band and IF signals
- Passes all modulation formats
- Modular design; all cards are front-loading and hot-swappable
- Passcode protection for configuration parameters, destination locks and salvo locks
- Up to 32 programmable salvos
- External system expansion capability up to 512x512
- Redundant power supply and frame controller options
- Automatic or manual gain control on all input channels
- RF power monitoring on all input channels
- Adjustable output level in AGC mode
- Matrix crosspoint control using card-edge interface, X-NCP2 remote control panel, VistaLINK®, or 3rd party control software
- System configuration, alarm monitoring, event logging, and email notification available through VistaLINK® or 3rd party control software

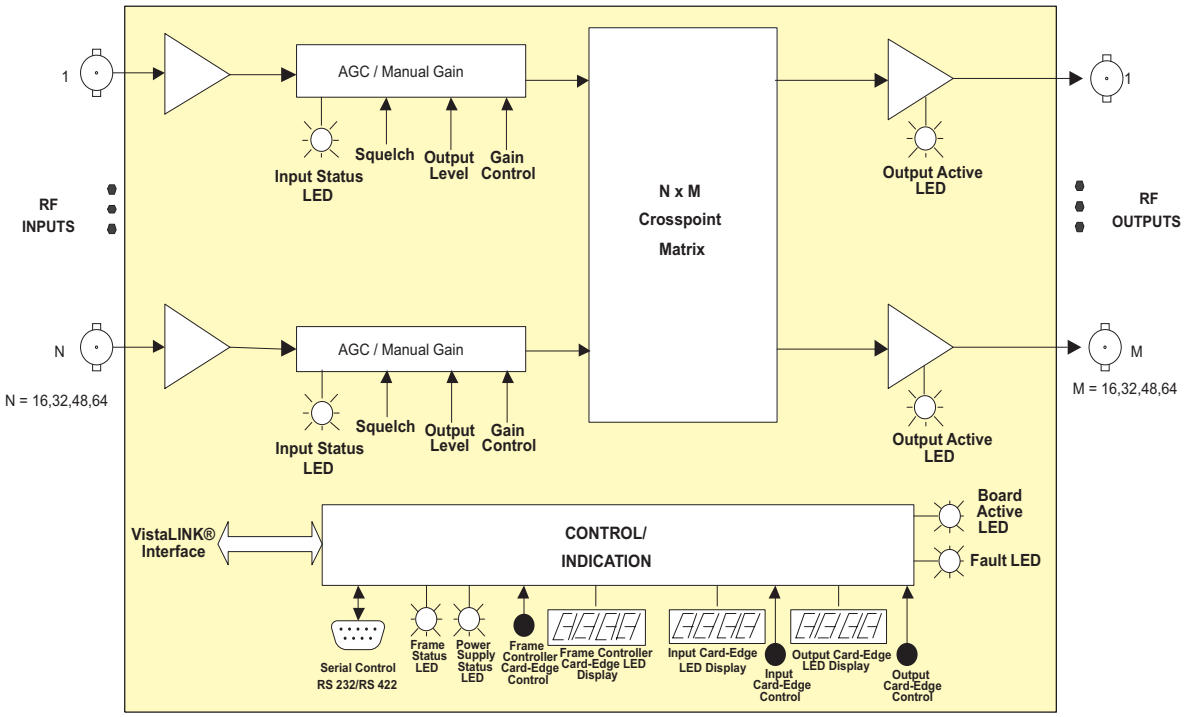

Specifications

System:

Matrix Sizes:	16x16 to 64x64 in a 6RU frame 512x512 maximum expanded system size
System Expansion:	Inputs or outputs are expandable in increments of 16 Expansion beyond 64x64 requires additional frames and external splitting/combining
Impedance:	75Ω (50Ω optional)
Connector Type:	BNC per IEC 60169-8 Amendment 2 (SMA, F-type optional)
Gain Range (manual gain mode):	-6 to +20dB in 1dB steps
Output AGC level:	-20 to -50dBm

RF Specifications - L-Band:

Bandwidth:	850 to 2250MHz*
Freq Response:	±1.5dB over the passband, ±0.5dB over any 36 MHz channel
Isolation:	> 60dB input to output > 70dB output to output and input to input
RF Input Power:	-10 to -70dBm
Max RF Output Power:	-10dBm
Input P1dB:	+2dBm (1500MHz) typ
OIP3:	+12dBm (1500MHz) typ
Noise Figure:	6dB (1500MHz, Gain = +20dB) typ 20dB (1500MHz, Gain = 0dB) typ
Return Loss:	> 15dB (input and output)

RF Specifications - IF:

Bandwidth:	40 to 200 MHz*
Frequency Response:	± 0.5dB over 50-90MHz and 120-60MHz
Isolation:	> 60dB input to output > 70dB output to output and input to input
RF Input Power:	-15 to -70dBm
Max RF Output Power:	-10dBm
Input P1dB:	-4dBm (70MHz) typ
OIP3:	+10dBm (70MHz) typ
Return Loss:	> 13dB (input), > 15dB (output)

Communication & Control:

Serial:	RS232/RS422 selectable - Female 9-pin D connector
Ethernet:	SNMP over IEEE 802.3/U (10/100 BaseTx) RJ45 connector
Control:	X-NCP2 Network Control Panel, VistaLINK®, card edge interface

Electrical:

AC Input:	Auto ranging, 100 to 240V AC, 50/60Hz
Max Power Consumption:	350W (Fully loaded frame)
Connector:	IEC 60320 - 1 per power supply
Fuses:	4 amp, 250 Volt time delay 5x20mm - 2 per power supply
Status Indicators (each power supply):	PSU status LED Local Error/Failure LED

Compliance:

Safety:	CSA Listed to CSA C22.2 No. 60065-03, UL 60065-03 IEC 60065-(2001-12) 7th Edition Complies with CE Low voltage Directive 93/68/EEC
EMC:	Complies with FCC part 15, class A Complies with EU EMC directive 89/336/EEC

Physical:

Dimensions:	10.5"H x 19"W x 20.5"D (266mm) x (483mm) x (520mm)
Module Capacity:	4 input slots, 4 output slots
Weight:	Approx. 17.4lbs (7.9kg) with 2 power supplies, no slots occupied Approx. 32lbs (14.5kg) with 2 power supplies all slots occupied

** All specifications over specified bandwidth unless noted*

Ordering Information

(Sample Systems)	*Contact Evertz sales for other matrix sizes*
PKGXRF6L-32x32:	32x32 RF Routing System
PKGXRF6L-32x64:	32x64 RF Routing System
PKGXRF6L-64x64:	64x64 RF Routing System
PKGXRF6L-128x128:	128x128 RF Routing System
PKGXRF6L-512x512:	512x512 RF Routing System

Ordering Options

XRF6-PS	Redundant power supply
X-NCP2	Router control panel
XRF6L-FC	Redundant frame controller

Contact Evertz sales for 50Ω BNC, SMA and F-Type connector options

The X-3232-EO is a VistaLINK® -capable electrical/optical router for digital electrical or optical signals with rates up to 3Gb/s. It can accept signals on any of its 16 optical or 16 electrical inputs and route them to any number of its 16 optical or 16 electrical outputs. The X-3232-EO is ideal for signal regeneration, routing and wavelength management in your optical system. The optical outputs are available in 1310nm or CWDM wavelengths. The X-3232-EO is housed is a 2RU frame.

X-3232 Block Diagram

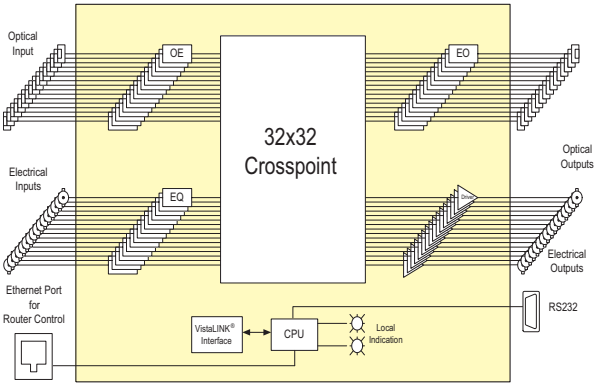

Features & Benefits

- 16 fiber optic inputs and outputs
- 16 coaxial inputs and outputs
- Provides optical regeneration routing and wavelength management
- Data rate independent to 3Gb/s
- Handles Video, Audio, Datacom and Telecom signals
- Fully non-blocking architecture
- Broadcast mode capability (any input to any number of outputs)
- Allows EO/OE conversion in one platform
- Provides ADD, DROP and MUX capabilities
- Accepts any input wavelength (1270nm to 1610nm)
- Outputs available with 1310nm or CWDM (ITU G.694.2)
- SNMP monitoring and remote router control via model XNCP2 control panel or VistaLINK®
- Compatible with single-mode or multi-mode fiber optic cable
- Compact 2RU size

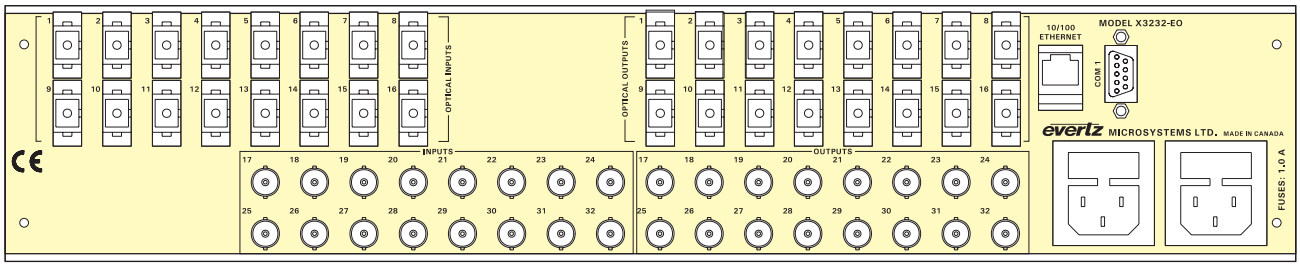

Specifications

Optical Input:
Number of Inputs: 16
Connector: SC/PC, ST/PC, FC/PC Female housing
Operating Wavelength: 1270nm-1610nm
Maximum Input Power: -1dBm
Optical Sensitivity: -21dBm

Optical Output:
Number of Outputs: 16
Connector: SC/PC, ST/PC, FC/PC Female housing
Return Loss: > 14dB
Output Wavelength:
X-3232-EO13: 1310nm
X-3232-EOCWDM: 1270nm-1610nm (16 wavelengths, 20nm spacing)
Output Power:
X-3232-EO13: -7dBm
X-3232-EOCWDM: 0dBm

Electrical Input:
Standard: Any scrambled, 8b/10b or similarly encoded signal from 155Mb/s to 3.125Gb/s
Number of Inputs: 16
Connector: BNC per IEC 60169-8 Amendment 2
Return Loss: > 12dB
Signal Level: 800mV nominal

Electrical Output:
Standard: Any scrambled, 8b/10b or similarly encoded signal from 155Mb/s to 3.125Gb/s
Number of Outputs: 16
Connector: BNC per IEC 60169-8 Amendment 2
Return Loss: > 12dB
Signal Level: 800mV nominal
DC Offset: 0V ±0.5V

Communication and Control:
Serial: RS232/422, DB9 Male
Ethernet: IEEE 802.3/U (10/100 BaseTx) RJ45 connector

Compliance:
Electrical Safety: ETL Listed
Complies with CE Low voltage Directive
Laser Safety: Class 1 laser product
Complies with 24 CFR 1040.10 and 1040.11
IEC 60825-1
EMI/RFI: Complies with FCC Part 15, Class A
EU EMC directive

Physical:
Dimensions: 19"W x 3.5"H x 18"D (483mm W x 90mm H x 457mm D)
Weight: 8lbs (3.5kg)

Electrical:
Voltage: Auto-ranging 100-240V AC 50/60Hz 40 W
Fuse Rating: 250V, 1 amp time delay

Ordering Information

X-3232-EO13	32x32 Electrical/Optical Router with 16 1310nm optical outputs
X-3232-EOCWDM	32x32 Electrical/Optical Router with 16 CWDM (1270nm-1610nm) optical outputs

Ordering Options Fiber Connector must be specified at time of order
Eg: Model +SC +3RU

Connector Suffix
+SC SC/PC
+ST ST/PC
+FC FC/PC

X-1616G, X-1616G-F, X-3232G & X-3216G-F

G-Link Routers

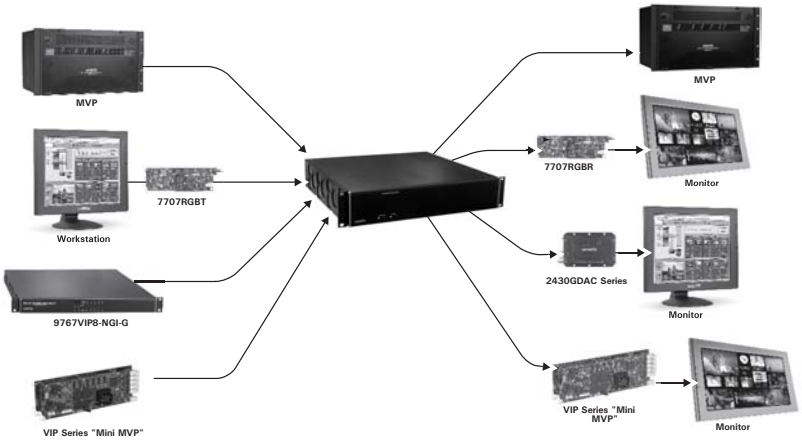

The X-3232G Series is a VistaLINK® capable cross-point matrix for routing DVI/RGBHV digital signals using the Evertz Graphics Link protocol (GLINK). The system is comprised of 3 elements. Input source devices which generate or convert baseband signals to GLINK, Core Cross-point matrix for switching GLINK signals, edge output devices for converting from GLINK to DVI/RGBHV, or injesting GLINK directly.

Input devices include: Evertz MVP™ Multi-viewers, modular 7767VIP series, 1RU 9767VIP series multi-viewers, and 7707RGBT DVI/RGBHV to GLINK converter. Output devices include: Evertz MVP™ with GLINK inputs, VIP™ series with GLINK inputs, 7707RGBR modular GLINK to DVI/RGBHV converter, and 2430GDAC small form factor GLINK to DVI/RGBHV converters.

The following versions of 2RU GLINK router models are available:

X-1616G	16x16 GLINK Router - 16 Electrical Inputs, 16 Electrical Outputs
X-1616G-F	16x16 GLINK Router - 16 Electrical Inputs, 16 Fiber Outputs
X-3232G	32x32 GLINK Router - 32 Electrical Inputs, 32 Electrical Outputs
X-3216G-F	32x32 GLINK Router - 32 Electrical Inputs, 16 Fiber Outputs

The GLINK optical outputs are available at 1310nm. For applications requiring 32x32 optical inputs and outputs the X-3232G can be coupled with the 3000MWP-OE-5 and 3000MWP-EO-5 high density optical to electrical and electrical to optical converters house within the 3000FR.

Features & Benefits

- Fully non-blocking architecture
- Broadcast mode capability (any input to any number of outputs)
- Allows EO/OE conversion in one platform
- Provides ADD, DROP and MUX capabilities
- SNMP monitoring and remote router control via model 9000NCP control panel
- Compatible with single-mode or multi-mode fiber optic cable
- Compact 2RU size

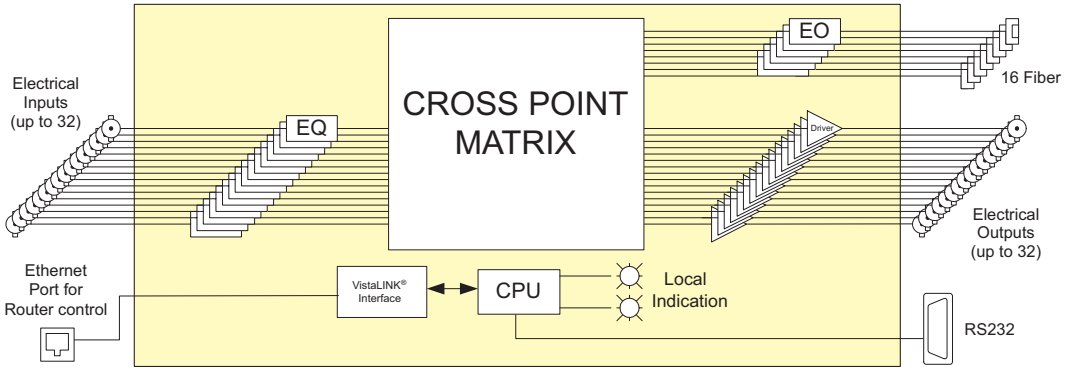

Specifications

Optical Input:

Number of Inputs:	Up to 32 using 3000OE-5
Connector:	SC/PC, ST/PC, FC/PC Female housing
Operating Wavelength:	1270nm-1610nm
Maximum Input Power:	-1dBm
Optical Sensitivity:	-18dBm

Optical Output:

Number of Outputs:	Up to 16 native within the device, expandable to 32 using 3000EO-5
Connector:	SC/PC, ST/PC, FC/PC Female housing
Return Loss:	> 14dB
Output Wavelength:	1310nm
Output Power:	-7dBm

Electrical Input:

Standard:	GLINK 8b/10b or similarly encoded signal
Number of Inputs:	Up to 32 depending on configuration
Connector:	BNC per IEC 60169-8 Amendment 2
Return Loss:	> 12dB
Signal Level:	800mV nominal

Electrical Output:

Standard:	GLINK 8b/10b or similarly encoded signal
Number of Outputs:	Up to to 32 depending on configuration
Connector:	BNC per IEC 60169-8 Amendment 2
Return Loss:	> 12dB
Signal Level:	800mV nominal
DC Offset:	0V ±0.5V

Communication and Control:

Serial:	RS232/422, DB9 Male
Ethernet:	IEEE 802.3/U (10/100 BaseTx) RJ45 connector

Physical:

Dimensions:	19"W x 3.5"H x 18"D (483mm W x 90mm H x 457mm D)
Weight:	8lbs (3.5kg)

Electrical:

Voltage:	Auto ranging 110 + 240 Volts AC, 50/60Hz 40W
Fuse Rating:	250 V, 1 amp time delay
Safety:	ETL Listed, complies with EU safety directives
Laser Safety:	Class 1 laser product Complies with 24 CFR 1040.10 and 1040.11 IEC 60825-1
EMI/RFI:	Complies with FCC Part 15 Class A regulations Complies with EU EMC Directive

Ordering Information

X-1616G	16x16 G-LINK Router, 16 Electrical inputs, 16 Electrical outputs
X-1616G-F	16x16 G-LINK Router, 16 Electrical inputs , 16 Fiber outputs
X-3232G	32x32 G-LINK Router, 32 Electrical inputs, 32 Electrical outputs
X-3216G-F	32x16 G-LINK Router, 32 Electrical inputs, 16 Fiber outputs

Ordering Options Fiber Connector must be specified at time of order (Eg: Model +SC)

Connector Suffix

+SC	SC/PC
+ST	ST/PC
+FC	FC/PC

The X-0808-OO & X-1616-OO are VistaLINK® - capable optical routers for digital optical signals with rates up to 3Gb/s. The X-0808-OO & X-1616-OO can accept signals on any of the 8 or 16 optical inputs and route them to any number of the 8 or 16 optical outputs. The X-0808-OO & X-1616-OO are ideal for signal regeneration, routing and wavelength management in any optical system.

The optical outputs are available in 1310nm or CWDM wavelengths.
The X-0808-OO and X-1616-OO are housed in a 2RU frame.

X-0808-OO & X-1616-OO Block Diagram

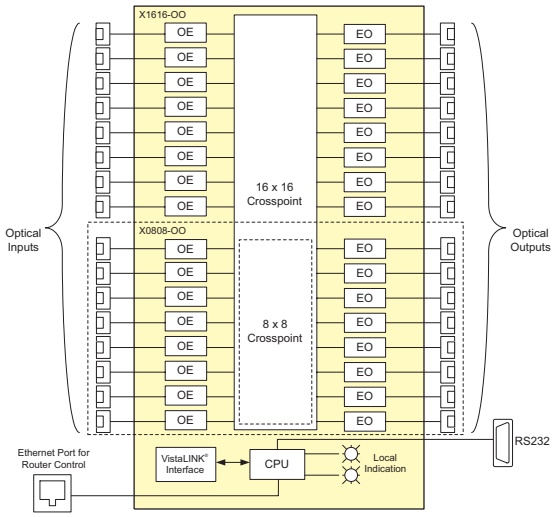

Features & Benefits

- 8 or 16 fiber optic inputs and outputs
- Provides optical regeneration (amplification, reshaping), routing and wavelength management
- Data rate independent to 3Gb/s
- Handles Video, Audio, Datacom and Telecom signals
- Fully non-blocking architecture
- Broadcast mode capability (any input to any number of outputs)
- Accepts any input wavelength (1270nm to 1610nm)
- Outputs available with 1310nm or CWDM (ITU G.694.2)
- SNMP monitoring and remote router control via Model XNCP2
- Compatible with single-mode or multi-mode fiber optic cable
- Compact 2RU size

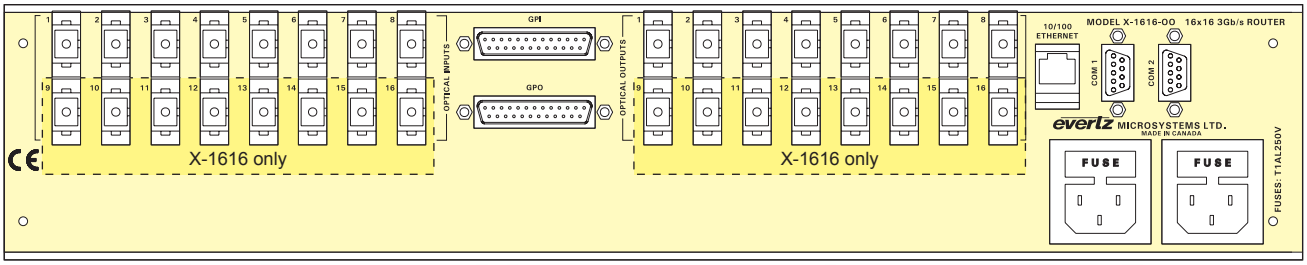

Specifications

Optical Input:
Number of Inputs: 8 (X-0808-OO), 16 (X-1616-OO)
Connector: SC/PC, ST/PC, FC/PC Female housing
Operating Wavelength: 1270nm-1610nm
Maximum Input Power: -1dBm
Optical Sensitivity: -18dBm

Optical Output:
Number of Outputs: 8 (X-0808-OO), 16 (X-1616-OO)
Connector: SC/PC, ST/PC, FC/PC Female housing
Return Loss: > 14dB
Output Wavelength:
Standard: 1310nm
CWDM: 1270nm-1610nm (8 or 16 wavelengths, 20nm spacing)
Output Power:
1310nm: -7dBm
CWDM: 0dBm

Communication and Control:
Serial: RS232/422, DB9 Male
Ethernet: IEEE 802.3/U (10/100 BaseTx)
RJ45 connector

Compliance:
Electrical Safety: ETL Listed
Complies with CE Low voltage Directive
Laser Safety: Class 1 laser product
Complies with 24 CFR 1040.10 and 1040.11
IEC 60825-1
EMI/RFI: Complies with FCC Part 15, Class A
EU EMC directive

Physical:
Dimensions: 19"W x 3.5"H x 18"D
(483mm W x 90mm H x 457mm D)
Weight: 8lbs (3.5kg)

Electrical:
Voltage: Auto-ranging 100-240V AC 50/60Hz
40W
Fuse Rating: 250V, 1 amp time delay

Ordering Information

X-0808-OO13	8x8 Optical Router with 8 1310nm optical outputs
X-0808-OOCWDM	8x8 Optical Router with 8 CWDM (1470nm-1610nm) optical outputs
X-1616-OO13	16x16 Optical Router with 16 1310nm optical outputs
X-1616-OOCWDM	16x16 Optical Router with 16 CWDM (1270nm-1610nm) optical outputs

Ordering Options Fiber Connector must be specified at time of order
Eg: Model +SC

Connector Suffix
+SC SC/PC
+ST ST/PC
+FC FC/PC

7760CCM-HD

HD-SDI/SD-SDI Closed Caption CEA-608 & CEA-708 Translator

The 7760CCM-HD Closed Caption module is a CEA-608 to CEA-708 closed caption translator, decoder and analyzer that extends the signal monitoring capabilities of the Evertz monitoring product line by focusing on closed captions and extended data services (XDS).

The 7760CCM-HD has the capability to translate CEA-608 closed captions to CEA-708 closed captions and vice versa, providing a flexible and cost-effective solution for both caption domains. The module supports the ability to format closed caption data into SMPTE 333M or Grand Alliance format for RS-232 closed caption transfer.

The auto-detecting program input supports both high and standard definition video formats, and comes equipped with a bypass relay, which will maintain the program path in the event of a power failure.

The 7760CCM-HD provides both a CEA-608 and CEA-708 closed caption decoder. The 7760CCM-HD also provides a detailed and comprehensive status display to the current state of the closed caption data. This status display can inform operators quickly if an error was detected.

The 7760CCM-HD occupies one card slot and can be housed in either a 1RU frame which will hold up to 3 modules, a 3RU frame which will hold up to 15 modules or a standalone enclosure which will hold 1 module.

Features & Benefits

- CEA-608 / CEA-708 closed caption translator
- Support for SMPTE 333M and Grand Alliance Protocol for convenient interface to ATSC Encoders
- Built in bypass relay on program video output path
- Auto-detecting SMPTE 259M-C and SMPTE 292M program video input
- Monitoring output decodes and displays CEA-608 or CEA-708 closed captions
- XDS packet insertion onto the program video output
- Decodes XDS packets containing TSID, CGMS-A, Program ID, Time in Show, Program Name, Program Type, V-Chip Rating, Program Description, Network Name, Station ID, Time of Day and Time of Zone
- Closed caption line shift (up and/or down) via GPI trigger
- User configurable presets
- VistaLINK® capable offering remote monitoring and control via SNMP (using VistaLINK® PRO) when installed in 7700FC VistaLINK® Frame Controller

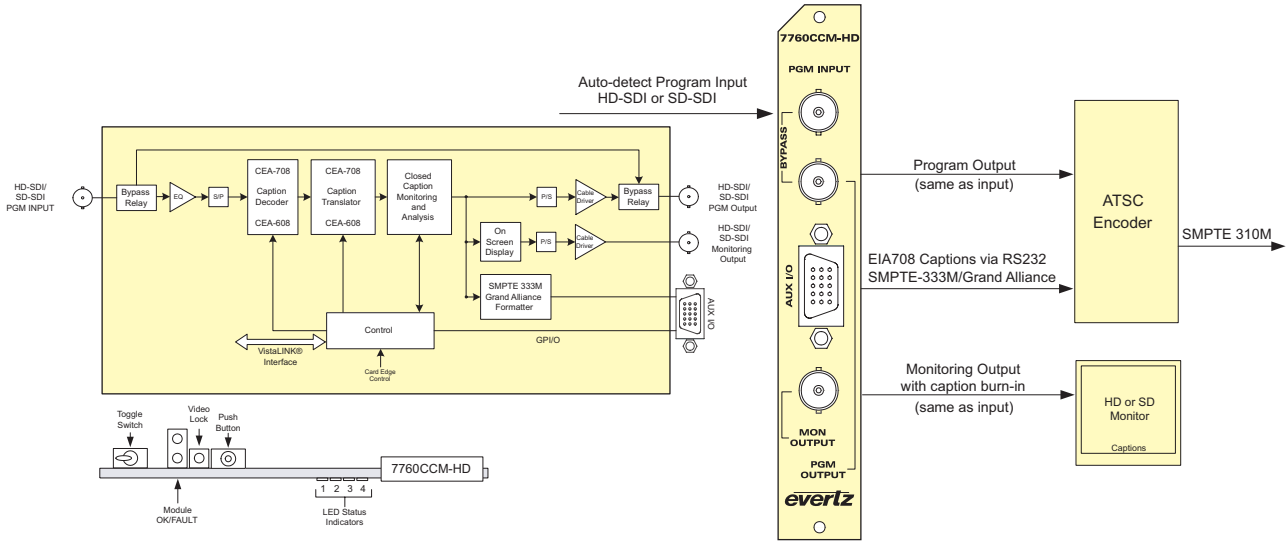

Specifications

Serial Video Input::

Standard:	Auto-sensing SMPTE 259M-C, SMPTE 292M
Number of Inputs:	1
Connector:	BNC per IEC 60169-8 Amendment 2
Equalization:	Automatic to 100m @ 1.5Gb/s with Belden 1694A (or equivalent) Automatic to 250m @270Mb/s with Belden 1694A (or equivalent)
Return Loss:	>10dB up to 1.5 Gb/s

Program Output:

Standard:	Same as input
Number of Outputs:	1
Connector:	BNC per IEC 60169-8 Amendment 2
Signal Level:	800mV nominal
DC Offset:	0V ±0.5V
Rise and Fall Time:	740ps nominal @ SMPTE 259M-C 200ps nominal @ SMPTE 292M
Overshoot:	< 10% of amplitude
Return Loss:	> 10dB up to 1.5 Gb/s
Wideband Jitter:	< 0.2 UI
Impedance:	75W

General Purpose Interface:

Number of Inputs:	4
Number of Outputs:	2
Type:	Opto-isolated, active low with internal pull-ups to +5V
Connector:	Female High Density DB-15
Signal Level:	+5V nominal

Serial Port:

Standard:	RS-232
Connector:	Female
Baud Rate:	19200/38400/57600
Format:	8-bits, no parity, 1 stop bits and no flow control

Electrical:

Voltage:	+12V
Power:	12 Watts
EMI/RFI:	Complies with FCC Part 15, Class A EU EMC Directive

Physical:

Number of Slots:	1

Ordering Information

7760CCM-HD	HD-SDI/SD-SDI Closed caption CEA-608 / CEA-708 Translator
Ordering Options	Rear Plate must be specified at time of order Eg: Model +3RU

Rear Plate Suffix

+3RU	3RU Rear Plate for use with 7700FR-C Multiframe
+1RU	1RU Rear Plate for use with 7701FR Multiframe
+SA	Standalone Enclosure Rear Plate

Enclosures

7700FR-C	3RU Multiframe which holds up to 15 single slot modules
7701FR	1RU Multiframe which holds up to 3 single or dual slot modules
S7701FR	Standalone enclosure

CaptionWare is an easy-to-use application designed to simplify the encoding of XDS (V-Chip, TSID, CGMS-A, Program ID, etc.), and to deliver a common control access point for Evertz 8000 and 9000 Closed Caption products.

CaptionWare also addresses the need for Closed Caption looping requirements, typically required for pledge drives. This simple-to-use software allows users to create and recall existing files, and to set the duration and number of loop intervals to run the Closed Caption message.

The software is also a very helpful test tool when debugging your plant set-up. CaptionWare gives the user an easy way to insert caption test messages, allowing simple debugging of any downstream products or decoders.

CaptionWare Screen Shots

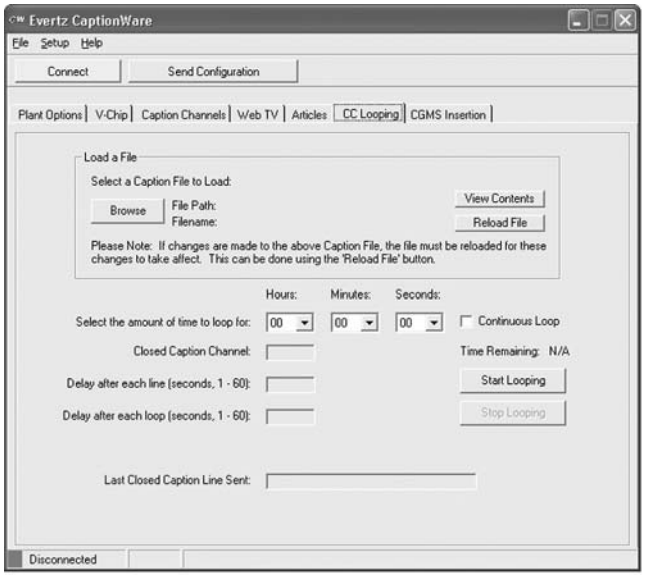

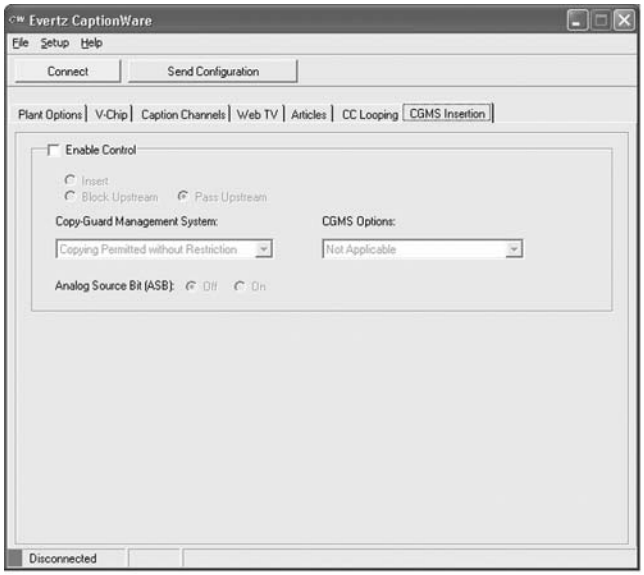

Specifications

PC Hardware Recommendations:

Operating System:	Microsoft Windows(TM) (2000, XP)
Memory:	128Mb of RAM
Hard Disk:	10Mb
Display:	2Mb video card. Super VGA (800x600) or higher-resolution with 256 colours
Peripherals:	1 RS-232 serial communcations port

Ordering Information

CaptionWare	Closed Caption and XDS Configuration Utility

Compatible Evertz Hardware
8083XDS-AD
8084
8084-AD
8085
HD9084

HD9084

HD/SD-SDI DTV Closed Caption Encoder

The HD9084 DTV Caption Processor is a comprehensive, compact solution for all HD Advanced Closed Caption, SD Advanced Closed Caption and SD Line 21 Closed Captions. Simultaneous HD-SDI and SD-SDI video I/O paths provide a compact one-box solution.

Features & Benefits

- Simultaneous encoding of new CEA-608 and CEA-708 captions onto SD-SDI and HD-SDI video
- Dolby® Metadata encode via serial port ingest
- Port Echo capability for closed caption encoder "daisy chain" set-up
- CEA-608 Line 21 VBI bridge functionability
- CEA-708 Advance caption bridge functionability
- One SD-SDI, 270Mb/s digital video input, 525 or 625
- One HD-SDI, 1.5Gb/s digital video input, 1080i/720p/480p
- Support for SMPTE 334M, SMPTE 333M & grand alliance transfer formats for both SD-SDI & HD-SDI
- Support for Line 21 CEA-608 captions on SD-SDI
- RS232/422 serial, telephone modem, Ethernet TCP/IP and parallel GPI communication interface
- Built-in CEA-708 (HD-SDI) and CEA-608 (SD-SDI) closed caption decoder via NTSC monitoring output
- Closed caption shifting for both SD and HD captions
- Easy configuration via front panel or via on-screen display
- Encoding of Extended Data Service Packets into field 2 of the SD-SDI signal including Transmission Signal Identifier (TSID), Copy Generation Management System (CGMS-A) and V-Chip

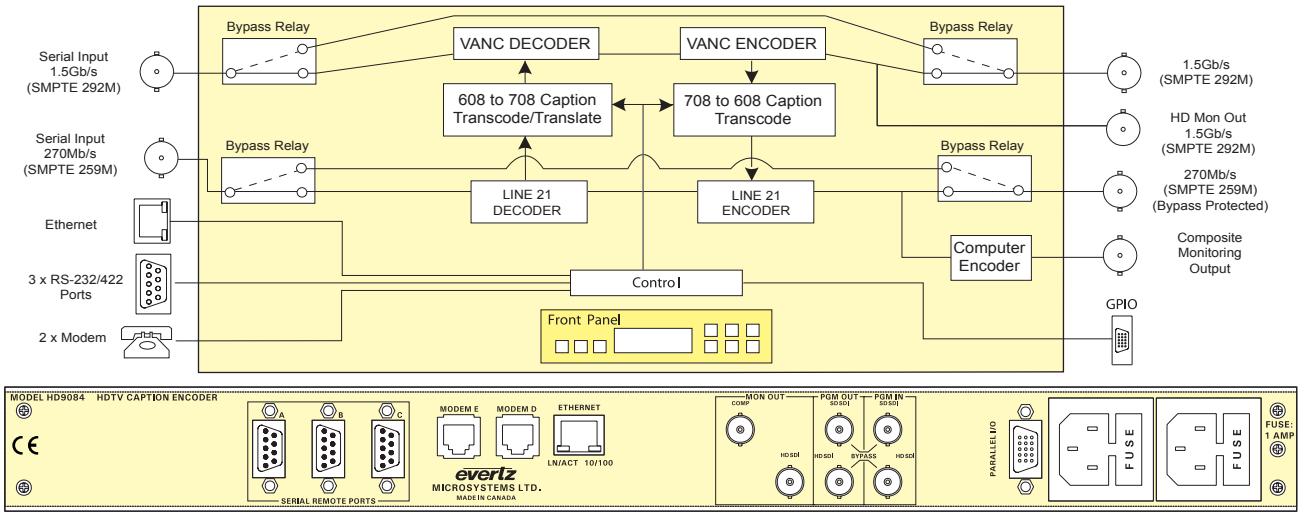

Specifications

HDTV Serial Digital Video Input:

Standard:	SMPTE 292M 1.485 Gb/s, 1080i, 720p, 480p
Number of Inputs:	1
Connector:	BNC per IEC 60169-8 Amendment 2
Equalization:	Automatic up to 75m @1.5Gb/s with Belden 1694A (or equivalent)
Impedance:	75Ω

HDTV Serial Digital Video Output:

Standard:	Same as HD input
Number of Outputs:	1 program out (bypass relay protected) 1 monitoring out
Connector:	BNC per IEC 60169-8 Amendment 2
Signal Level:	800mV nominal
DC Offset:	0V ±0.5V
Rise and Fall Time:	200ps nominal
Overshoot:	<10% of amplitude
Wide Band Jitter:	<0.2 UI
Impedance:	75Ω

SDTV Serial Digital Video Input:

Standard:	SMPTE 259M-C
Number of Inputs:	1
Connector:	BNC per IEC 60169-8 Amendment 2
Equalization:	Automatic 200m @ 270Mb/s Belden 1694A (or equivalent)

SDTV Serial Digital Video Output:

Standard:	Same as Input
Number of Outputs:	1 program out (bypass relay protected)
Connector:	BNC per IEC 60169-8 Amendment 2
Signal Level:	800mV nominal
DC Offset:	0V ±0.5V
Rise and Fall Time:	470ps nominal
Overshoot:	< 10% of amplitude
Return Loss:	> 15dB
Wide Band Jitter:	< 0.2 UI

Composite Monitoring Output with OSD:

Standard:	NTSC (SMPTE 170M)
Number of Outputs:	1
Connector:	BNC per IEC 60169-8 Amendment 2
Signal Level:	1V nominal
Impedance:	75Ω

General Purpose In/Out:

Number of Inputs:	7
Number of Outputs:	3
Type:	Opto isolated, active low
Connector:	Female High Density DB-15
Signal level:	+5V nominal

Communications and Control:

Serial:	3 DB-9 male RS232 /422 selectable 1200 baud to 57.6 kbaud 7 or 8 data bits
Modem:	2 RJ-11 telephone jacks (2nd modem optional) 1200 baud to 14.4 kbaud V.32BIS compatible
Ethernet:	IEEE 802.3 (10 BaseT) IEEE 802.3u (100 BaseTX) RJ-45 connector

Physical:

Dimensions:	19"W x 1.75"H x 18.75" (483mm W x 45mm H x 477mm D)
Weight:	8lbs (3.5kg)

Electrical:

Power:	115/230V AC 50/60Hz, 40W
Safety:	ETL Listed Complies with EU safety directive
EMI/RFI:	Complies with FCC part 15, class A EU EMC Directive

Ordering Information

HD9084	HD/SD-SDI DTV Closed Caption Encoder

Ordering Options

+2PS	Optional redundant power supply
+MDM2	Second internal modem option

The 8084 is a full broadcast quality Closed Caption Encoder which generates CEA-608 line 21 caption data directly into the digital bitstream. The 8084AD is a full broadcast quality Closed Caption Encoder which generates line 21 caption data directly into both analog and digital video feeds. The 8084 and 8084AD allow data to be encoded into all caption and text channels in both field 1 and field 2 of the video. It can also encode Extended Data Service (XDS) packets into field 2 supporting such services as Transmission Signal Identifier (TSID), Copy Generation Management System (CGMS-A), station name, call letter identification, program name, classification, remaining air time and content advisory ratings (compatible with V-Chip decoders).

The 8084 and 8084AD are highly configurable to guarantee maximum compatibility with a wide variety of applications and software packages. The encoder can be configured to individually manipulate each data stream independent of the others. It is also compatible with various automation and traffic programs such as Enterprise's "BMS Traffic System".

The built-in bypass relay, fault reporting output and optional redundant power supply ensure robust operation. The analog monitor output displays visible captions from any data channel, including many XDS packet types.

Features & Benefits

- Keys directly into a 525 line or 625 line component (4:2:2) digital video bitstream
- 8084AD also keys directly into NTSC or PAL composite analog video
- Can add captions, text, web links or Extended Data Service information to previously captioned programs
- Individual caption and text data streams can be passed, modified or removed from the incoming video
- Support for text insertion from articles stored in the one encoder by the captioning software
- Support for Extended Data Service (XDS) to encode program information including TSID, CGMS-A and V-Chip content advisory ratings
- V-Chip blocking codes selectable from front panel menus
- Selectable V-Chip default rating after timeout
- Bypass relay can be activated by GPI, front panel or automatically on power failure to allow the input video to pass through the unit unprocessed
- Three RS-232/RS-422 serial ports allow simultaneous control from three computers, for applications such as in house captioning, XDS insertion and more
- Built in modem interface for dial-up real time captioning
- Support for an optional second internal modem
- Built-in composite analog monitoring decoders provide real-time verification of encoded data. The decoded captions, text or XDS data is inserted as open captions on the monitoring video outputs
- Monitor mode allows caption data to be read directly from line 21 and output on the serial port
- Built in test message inserts data into all 9 data channels
- Composite decoder can display these XDS packet types: Network Name, Call Letters, Program Name, Program Length, Time in Show, Program Type, Program Description and Program Rating
- Ability to offset the effect of downstream component to composite encoders which add setup to line 21
- VBI Bridge function allows captions to be copied from one video source to another using two 8084 or 8084AD units
- GPI input to provide caption shift. This input can control the shift of rows 12 to 15 up to rows 1 to 4 when activated. Intended to provide compliance with FCC order prohibiting obstruction of weather warning text which often appears on the bottom of the screen
- Can encode captions on lines other than line 21 for specialized applications
- EDH Packet checksum correction ensures SDI video integrity to downstream equipment
- SMPTE 269M fault reporting output
- Optional LTC input for setting internal clock
- Supports a wide variety of caption software including the following:
  The Captioning Center - CCSQ and CCMS, Captions Inc. - Smart Encoder V 1.0b, Evertz ProCAP, Cheetah Systems - Captivator Offline Edit Version 2.1, Captivator Offline PostCAP 2.1, VITAC PostCAP 2.1, Computer Prompting and Captioning Co. -CPC-700 Version 6.20, National Captioning Institute - Text Encoding and Display System (TED) version 1.7, Autograph Systems - View level XDS controller, Rapid Caption

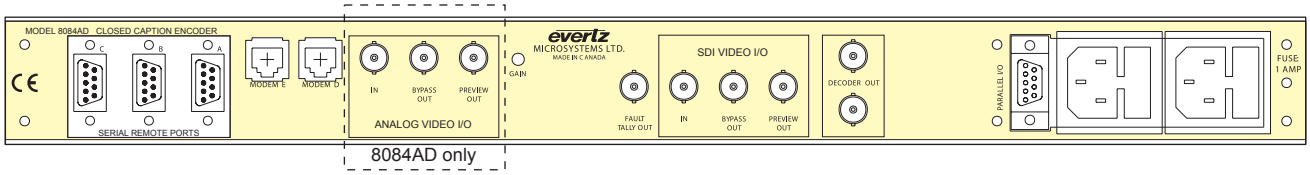

Specifications

SDTV Serial Digital Video Input:

Standard:	SMPTE 259M-C
Number of Inputs:	1
Connector:	BNC per IEC 60169-8 Amendment 2
Equalization:	Automatic 200m @ 270Mb/s Belden 1694A (or equivalent) 24m with bypass relay installed

SDTV Serial Digital Video Output:

Standard:	Same as Input
Number of Outputs:	1 program out (bypass relay protected)
Connector:	BNC per IEC 60169-8 Amendment 2
Signal Level:	800mV nominal
DC Offset:	0V ±0.5V
Rise and Fall Time:	470ps nominal
Overshoot:	< 10% of amplitude
Return Loss:	> 15dB
Wide Band Jitter:	< 0.2 UI

Composite Video Monitor:

Decoder:	2 BNC 1V p-p composite analog video outputs with open captions

Communications and Control:

Serial:	3 DB-9 male RS-232/422 selectable 1200 baud to 38.4 kbaud 7 or 8 data bits
Modem:	2 RJ-11 telephone jacks (2nd modem optional) 1200 baud to 14.4 kbaud V.32BIS compatible
Parallel GPI:	DB-9 female

Composite Analog Video (8084AD only):

Standard:	NTSC SMPTE 170M PAL ITU-R BT.1700
Input:	BNC 75Ω terminated
Output:	BNC with bypass relay
Preview:	BNC output with open captions

Physical:

Dimensions:	19"W x 1.75"H x 18.75" (483mm W x 45mm H x 477mm D)
Weight:	8lbs (3.5kg)

Electrical:

Power:	115/230V AC 50/60Hz, 40W
Safety:	ETL listed Complies with EU safety directive
EMI/RFI:	Complies with FCC Part 15, Class A EU EMC Directive

Ordering Information

8084	SD-SDI Closed Caption Encoder
88084AD	Analog & SD-SDI Closed Caption Encoder

Ordering Options

+MDM2	Second internal modem option
+2PS	Redundant power supply
+LTC	Optional LTC input

8083XDS-AD

Analog & SD-SDI XDS Encoder

The 8083XDS-AD is a full broadcast quality XDS Encoder which generates line 21 XDS data directly into both analog and digital video feeds. The 8083XDS-AD encodes Extended Data Service (XDS) packets into field 2 supporting such services as Transmission Signal Identifier (TSID), Copy Generation Management System (CGMS-A), station name, call letter identification, program name, classification, remaining air time and content advisory ratings (compatible with V-Chip decoders).

The 8083XDS-AD is highly configurable to guarantee maximum compatibility with a wide variety of applications and software packages. The encoder can be configured to individually manipulate each data stream independent of the others. The 8083XDS-AD is also compatible with various automation and traffic programs such as Enterprise's "BMS Traffic System".

Built-in bypass relays on both video paths, a fault reporting output and an optional redundant power supply ensure robust operation. Two separate analog monitor outputs display visible captions from any data channel, including many XDS packet types.

Features & Benefits

- Keys directly into a 525 line or 625 line component (4:2:2) digital video bitstream and composite analog video signal
- Support for Extended Data Service (XDS) to encode program information including TSID, CGMS-A and V-Chip content advisory ratings
- V-Chip blocking codes selectable from front panel menus
- Selectable V-Chip default rating after timeout via front panel
- Bypass relays for both video paths can be activated by GPI, front panel or automatically on power failure to allow the input video to pass through the unit unprocessed
- Three RS-232/RS-422 serial ports allow simultaneous control of the 8083XDS from three computers, for applications such as multi-point XDS insertion
- Built in test message inserts data into all 9 data channels
- Separate built-in composite analog monitoring decoders for each video path to provide real-time verification of encoded data. The decoded captions, text or XDS data is inserted as open captions on the monitoring video outputs
- Composite decoders can display these XDS packet types: Network Name, Call Letters, Program Name, Program Length, Time in Show, Program Type, Program Description and Program Rating
- VBI Bridge function allows captions to be copied from one video source to another using two Evertz closed caption or TSID units
- EDH Packet checksum correction ensures SDI video integrity to downstream equipment
- SMPTE 269M fault reporting output
- Optional LTC input for setting internal clock

Specifications

SDTV Serial Digital Video Input:

Standard:	SMPTE 259M-C
Number of Inputs:	1
Connector:	BNC per IEC 60169-8 Amendment 2
Equalization:	Automatic 200m @ 270Mb/s Belden 1694A (or equivalent) 24m with bypass relay installed

SDTV Serial Digital Video Output:

Standard:	Same as Input
Number of Outputs:	1 program out (bypass relay protected)
Connector:	BNC per IEC 60169-8 Amendment 2
Signal Level:	800mV nominal
DC Offset:	0V ±0.5V
Rise and Fall Time:	470ps nominal
Overshoot:	< 10% of amplitude
Return Loss:	> 15dB
Wide Band Jitter:	< 0.2 UI

Communications and Control:

Serial:	3 DB-9 male RS-232/422 selectable 1200 baud to 38.4 kbaud 7 or 8 data bits
Parallel GPI:	DB-9 female

Composite Analog Video:

Standard:	NTSC SMPTE 170M PAL ITU-R BT.1700
Input:	BNC 75Ω terminated
Output:	BNC with bypass relay
Preview:	BNC output with open captions

Physical:

Dimensions:	19"W x 1.75"H x 18.75" (483mm W x 45mm H x 477mm D)
Weight:	8lbs (3.5kg)

Electrical:

Power:	115/230V AC 50/60Hz, 40W
Safety:	ETL Listed Complies with EU safety directive
EMI/RFI:	Complies with FCC Part 15, Class A EU EMC Directive

Ordering Information

8083XDS-AD	Analog & SD-SDI XDS Encoder

Ordering Options

+2PS	Redundant Power Supply
+LTC	Optional LTC Input

The Multivert, a 10 channel composite encoder was designed for monitor wall applications where multiple SDI component video signals need to be converted to composite analog. The Multivert is the most cost effective method of monitoring on a per channel basis as it houses 10 converters as well as a redundant power supply in a 1RU frame. Each of the ten channels has two composite analog video outputs as well as a single regenerated SDI component video output.

The Multivert proves itself to be a better alternative to the use of awkward dongle based converters that use wall mounted or brick based power supplies.

The Multivert is a compact 1RU, 7.75 inches deep, rack mountable frame with both front and rear panel LED status displays for each of its ten channels. Thanks in part to its compact size, the Multivert is capable of being mounted in the rear of the monitoring wall equipment rack (Multivert was designed with capability to reverse the rack mounting brackets). Further, by having status LEDs on both the rear panel as well as the front panel, it allows the cables to be installed facing the rear of the rack thus providing for both status monitoring as well as convenient cabling.

Having the Multivert mounted in the rear of the monitor racks eliminates the need for long analog cable runs from modular converters in the equipment rack room to the monitors, thus eliminating the need for analog equalizing DAs.

Features & Benefits

- 10 independent converters in a 1RU enclosure
- 2 NTSC/PAL analog composite color outputs per converter
- Reclocked SDI output for each channel
- Ideal for monitoring serial component signals with inexpensive composite analog monitors
- Reversible rack ears allow for mounting in the back of a rack and with the shallow chassis measuring only 7.75”
- Can be mounted directly behind other equipment
- Dual power supply (optional)
- Each channel has front panel LEDs for PAL, NTSC and signal presence
- Video presence LED for each channel, viewable from the rear of each frame

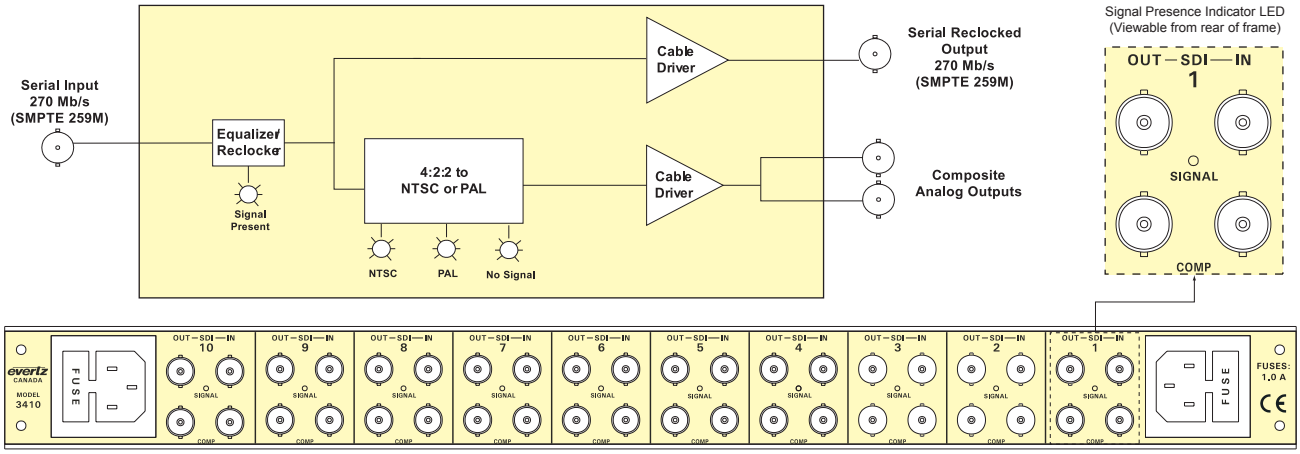

Specifications

Serial Digital Video Inputs:

Standard:	SMPTE 259M-C 525 line and 625 line component
Number of Inputs:	10 (1 per converter)
Input Equalization:	Automatic up to 250m with Belden 8281 (or equivalent)
Connector:	BNC per IEC 60169-8 Amendment 2
Return Loss:	> 15dB up to 540Mb/s
Impedance:	75Ω

Serial Digital Video Outputs:

Standard:	Serial component 270Mb/s (SMPTE 259M-C)
Number of Outputs:	10 (1 per converter)
Connector:	BNC per IEC 60169-8 Amendment 2
Signal Level:	800mV nominal
DC Offset:	0V ±0.5V
Rise and Fall Time:	750ps nominal
Overshoot:	< 10% of amplitude
Return Loss:	> 15dB
Wide Band Jitter:	< 0.2 UI
Impedance:	75Ω

LEDs:

Signal Presence:	10 Front (NTSC and PAL) 10 Rear
Power Supply:	2 Front

Composite Analog Outputs:

Number of Outputs:	20 (2 per converter)
Standard:	Analog composite NTSC if input is 525i/59.94 SMPTE 170M Analog composite PAL if input is 625i/50 ITU-R BT.1700
Connectors:	2 BNC per IEC 60169-8 Amendment 2
Signal Level:	1V p-p nominal, internally adjustable
DC Offset:	0V ±0.1V
Return Loss:	> 45dB up to 6MHz
Impedance:	75Ω

Physical:

Dimensions:	19“W x 1.75”H x 7.75”D (483mm W x 45mm H x 196mm D)
Weight:	6.7lbs (3kg) with two power supplies

Electrical:

Power:	Auto ranging 100-240V AC 50/60Hz 30W
Safety:	ETL listed Complies with EU safety directive
EMI/RFI:	Complies with FCC part 15 class A EU EMC Directive

Ordering Information

3410	Multivert (10 SDI to Analog Monitoring Converter)

Ordering Options

+2PS	Redundant Power Supply

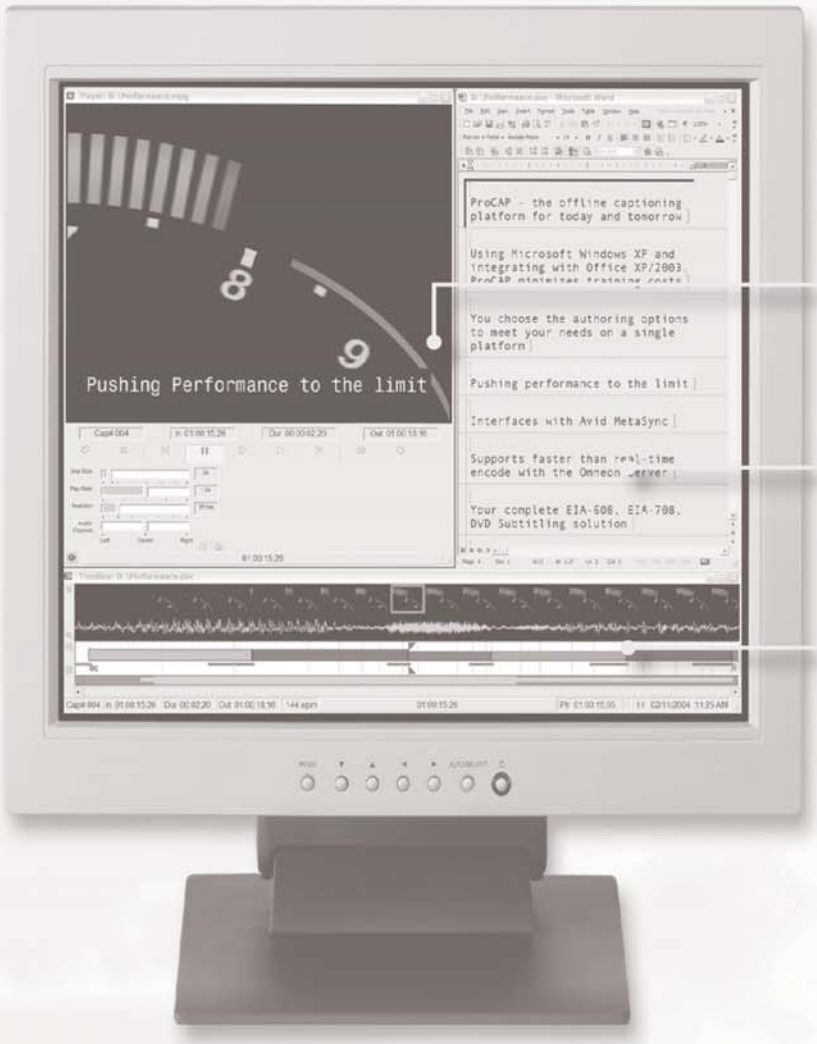

Player
• Using Windows™ XP multimedia subsystem for playback, ProCAP adds caption and subtitle preview over video for WYSI-WYG display, timing and positioning.

Editor
• Using Microsoft® Word, ProCAP extends the functionality of the universal word processor allowing users to import or create transcripts & author and edit captions, caption styles, format and positioning.

Timeline
• Provides a pictorial view of the caption information. Shot change detection, a film strip and an audio waveform allows for precise alignment of captions and subtitles.

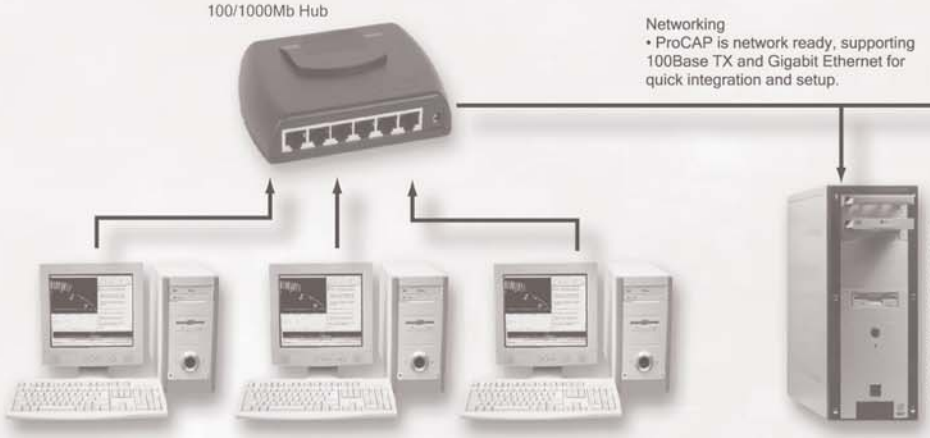

Networking
• ProCAP is network ready, supporting 100Base TX and Gigabit Ethernet for quick integration and setup.

Avid NLE with MetaSync®
• ProCAP Author seamlessly integrates with Avid NLEs. Avid WM9 export clips can be used directly. MetaSync® export scripts can be imported for finishing, or any available transcript used as a starting point. Completed work can be output for Transfer or as a Line 21 Quicktime video clip to be taken back into the Avid project.

ProCAP Authoring Systems
• ProCAP Author saves time by supporting EIA-608 Line 21 captioning, EIA-708 DTV captioning and DVD Subtitling all in the same application - the work done for one standard can be applied to the next. Cheetah, .CAP, TDS, .SCC for DVD Line 21, DVD scripts and Image files are all supported.

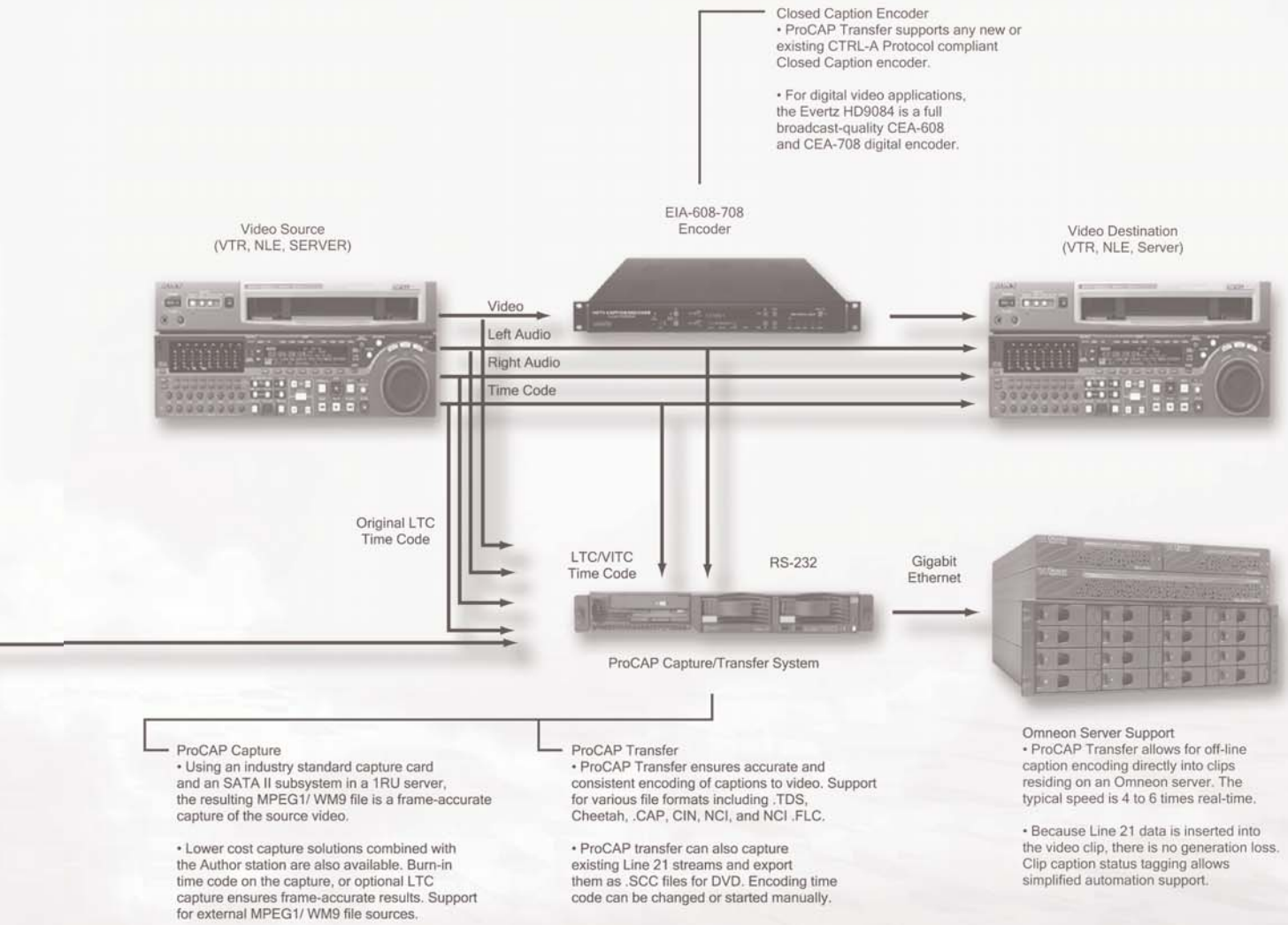

ProCAP Capture
• Using an industry standard capture card and an SATA II subsystem in a 1RU server, the resulting MPEG1/ WM9 file is a frame-accurate capture of the source video.

• Lower cost capture solutions combined with the Author station are also available. Burn-in time code on the capture, or optional LTC capture ensures frame-accurate results. Support for external MPEG1/ WM9 file sources.

ProCAP Transfer
• ProCAP Transfer ensures accurate and consistent encoding of captions to video. Support for various file formats including .TDS, Cheetah, .CAP, CIN, NCI, and NCI .FLC.

• ProCAP transfer can also capture existing Line 21 streams and export them as .SCC files for DVD. Encoding time code can be changed or started manually.

Omneon Server Support
• ProCAP Transfer allows for off-line caption encoding directly into clips residing on an Omneon server. The typical speed is 4 to 6 times real-time.

• Because Line 21 data is inserted into the video clip, there is no generation loss. Clip caption status tagging allows simplified automation support.

Features

- Full customization of keyboard shortcuts and macros to suit the user
- WYSI/WYG control over caption placement through drag-and-drop and shortcuts.
- Resizeable player window. Windows™ XP allows for multi-monitor display
- Timeline provides a pictorial view of caption reading rates and any conflicts or errors during authoring, saving revision time and costs
- Shot scene detection with tilm strip and audio waveform allows for accurate positioning of captions
- Interfaces to Avid and Avid MetaSync® allowing for rapid captioning of material
- Omneon Encode support delivers performance of 4 to 6 times real-time encode
- Automation support through clip tagging

Ordering Information

PA-SW-708	ProCAP Author Software only, 1 Station License, Adds 708 to Base
PA-SW-BASE	ProCAP Author Software only, 1 Station License, Base CEA-608 Standard
PA-SW-DVD	ProCAP Author Software only, 1 Station License, Adds DVD to Base
PA-SW-FULL	ProCAP Author Software only, 1 Station License, All Options
PC-HW	ProCAP Capture Hardware and Third Party Software
PCT-HW-TC	ProCAP Transfer PCI Timecode Reader Board
PT-SW	ProCAP Transfer Software only, 1 Station License, with 1 year support

1200DD, 1201DD

Data Digital Displays

The 1200DD Series Digital Data Displays are LED digital clocks with 7-segment-digits display. They may operate as a timecode-reading clock or as a digital SMPTE 12M linear timecode reader, simply displaying the input timecode. In addition to SMPTE 12M timecode, the clock can operate on the internal quartz time base, from IRIG-B, a GPS antenna or NTP. This multi-way reference capability allows easy integration into new or existing clock systems.

The model 1200DD clock face has 2.25" tall digits that may display HH:MM:SS AM/PM or HH:MM:SS FF, depending on the control settings. The model 1201DD clock face has 1.00" tall digits that may display HH:MM:SS AM/PM or HH:MM:SS FF, depending on the control settings. The brightness of the digital LEDs is adjustable.

Clock installation is simple when one of the time sources is available. Apply power, connect time and the clock takes care of the rest, instantly setting to the correct time. If the time source fails, the two small character displays flash twice per second to signal its absence. Any time discrepancy on return of timecode is instantly corrected. This also applies to time changes such as Standard Time to Daylight Saving Time.

The 1200DD series displays may be preset to display an offset from local time. This local offset allows the display of any or all time zones at one location. This offset is user-programmable from -12 hours to +12 hours. When no source of timecode is available,

the 1200DD series displays may be configured as a timecode generator, using its internal quartz crystal or GPS or IRIG-B or NTP. When used as a generator, the 1200DD series displays can drive multiple high impedance, timecode reading devices.

If AC power is lost, the 1200DD series displays maintain time internally via a crystal oscillator powered by a lithium battery. The display will show this time if no input time source is available on power up.

The rear panel input and output connectors for timecode are XLR connectors. The IRIG-B input is a BNC and the NTP is a RJ-45 Ethernet connector. The GPS input is a DB9 connector. The GPS feature requires the +GP option be purchased. When operating with no time source, the clock time can be easily set by means of three miniature pushbuttons on the front panel, which are also used to control the setup menu.

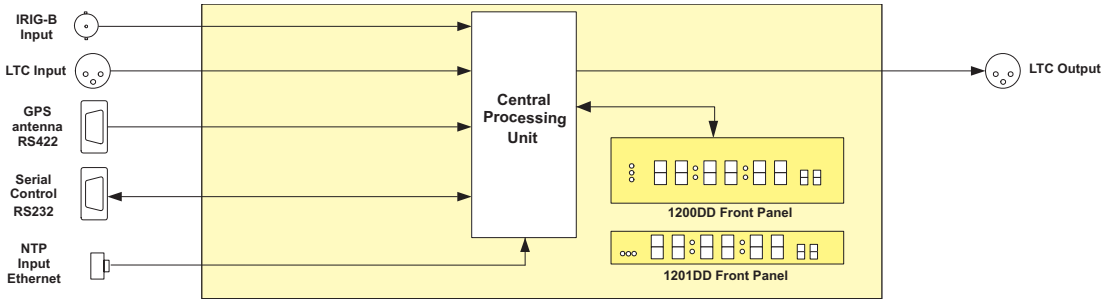

Features & Benefits

- Completely self-setting with SMPTE/EBU timecode input or battery back-up
- Built-in quartz time base oscillator with battery back-up
- May be operated as a timecode reader for use with countdowns
- Digital display is user-selectable between HH:MM:SS, 12/24 hour, HH:MM:SS FF and date
- IRIG reader reads 1kHz IRIG-B format sine wave amplitude modulated code (format B122)
- Optional GPS receiver
- May be configured as a timecode generator to drive other clocks
- LED brightness is adjustable
- Runs on 50/60Hz, 115/230V AC power line
- User-programmable time offsets
- Rack mount
- VistaLINK® control for device configuration and status monitoring
- Programmable daylight saving time start & end times
- NTP client
- Standard Red LED's (Green Optional -G)

Specifications

Linear Time Code Input:

Standard:	SMPTE 12M linear time code - 24, 25 or 30 Fps nominal
Impedance:	> 30kΩ, balanced
Connector:	3-pin female XLR
Level:	1V to 4.5 p-p

IRIG Reader Input:

Standard:	IRIG 200-95 FORMAT B122
Connector:	BNC per IEC 60169-8 Amendment 2
Level:	0.2 to 4V p-p unbalanced

Linear Time Code Output:

Standard:	SMPTE 12M
Impedance:	Lo-Z, balanced
Level:	2V p-p nominal unloaded
Connector:	3-pin male XLR

Serial Port:

Connector:	Female DB-9
Level:	RS-232
Baud Rate:	57.6kBaud
Format:	8 data bits, no parity, 2 stop bits

Time Keeping:

Accuracy:	< 2 seconds per day with power on, no timecode present < 10 seconds/day with power removed
Time Zone Offset:	0 to 23½ hours in ½ hour increments Set with menu

GPS Receiver (+GP option):

Temperature:	-30°C to +70°C
Humidity:	95% R.H. Condensing at 60°C
Dimensions:	5.8" D x 3.9" H (147mm x 100mm) Max. Cable Length: 400 feet

Ethernet:

Network Type:	Ethernet 100 Base-TX IEEE 802.3u standard for 100 Mb/s baseband CSMA/CD local area network Ethernet 10 Base-T IEEE 802.3 standard for 10 Mb/s baseband CSMA/CD local area network
Connector:	RJ-45
NTP Standard:	RFC-1305 compliant, client mode support

Backup Battery:

Type:	CR-2032 3 volt lithium cell.
Life expectancy:	> 5 years

Electrical:

Power:	12V DC, 15W auto ranging 100 to 240V AC, 50/60Hz adapter included
Power Supply:	UL Listed
Safety:	Complies with EU low voltage directive
EMI/RFI:	Complies with FCC Part 15 Class A EU EMC Directive

Physical:

Dimensions	
1200DD	19" W x 3.5" H x 2.75" D (483mm W x 90mm H x 70mm D)
1201DD	19" W x 1.75" H x 2.75" D (483mm W x 45mm H x 70mm D)
Weight:	
1200DD	3 lbs (1.5kg)
1201DD	2 lbs (1 kg)

Controls:

Front:	3 pushbuttons
Rear:	Serial port com.
Local Offset:	Any amount, user selectable

Ordering Information

1200DD	2RU Rack-mount Digital Display
1201DD	1RU Rack-mount Digital Display
1200DD-G	2RU Rack-mount Digital Display - Green LED's
1201DD-G	1RU Rack-mount Digital Display - Green LED's

Ordering Options & Accessories

+GP	GPS Option (includes GPS receiver and 50' weatherproof cable)
WA-T76	100' weatherproof cable for GPS receiver
WA-T11	400' weatherproof cable for GPS receiver

The introduction of Evertz analog time displays takes master and slave clock technology to new levels of convenience and excellence. The clocks are microprocessor controlled and employ separate direct drive motors for each hand. This means that, as well as being able to set the time almost instantaneously, the new displays are also silent in operation. The hands of the clocks can be programmed to move in sweep mode or in steps.

Each slave clock can be programmed for automatic daylight saving time adjustment, as well as for any time zone offset using a laptop computer. It is then only necessary to supply the clock system with Universal Coordinated Time (UTC) from the master clock. Daylight saving time changes will be automatic, as will adjustments for different time zones.

Each clock can be used as a master or slave clock. When used as a master, it generates timecode for distribution to other slave clocks. In fact, any clock in the chain can generate timecode as soon as it looses timecode input from the master. The system is therefore extremely robust and reliable.

The problems of power distribution have also been considerably simplified. With other clock products, it is necessary to install power outlets wherever clocks are to be located. With the Evertz system slave clocks are powered from a single feed that distributes both power and modulated timecode. The power is introduced at one of the 1212 slave clocks and from there it is distributed to the other downstream clocks. If the system is large, power can be introduced at multiple convenient slave clock locations.

Internal crystal oscillators ensure that the clocks will continue to operate in the absence of input timecode. Internal battery back-up ensures that each clock will continue to keep time in the absence of timecode and power. When power resumes, the hands will immediately reset to the correct time.

Features & Benefits

- SMPTE/EBU timecode input
- Three motors for quiet operation and rapid hand setting
- Addressable slave clocks with programmable time offsets
- Automatic Daylight Saving time adjustment
- Single cable distribution for both power and timecode
- Low voltage (12V) operation
- Master or Slave operation with battery backed up clock
- Sweep or Step second hand movement
- Optional Illumination
- Two sizes 12” or 16”

Specifications

Time Code:

Standard:	SMPTE 12M
Connectors:	Screw terminal block
Input Level:	1V p-p nominal
Input Impedance:	40kΩ nominal
Output Level:	
Powered:	2V p-p with 11V DC nominal offset to drive downstream slave clocks
Non-Powered:	Looped through from input

Serial Control:

Standard:	RS-232-C
Baud:	2400
Format:	8-bits, 1 Stop Bit, no flow control
Connector:	Female 9-pin D
Function:	Control commands for setting time zone offset, daylight savings time, and operational modes Commands sent to downstream slave clocks over time code user bits

Time Keeping:

Accuracy:	1 second per day free running on internal crystal oscillator
Battery:	3V Lithium
Time Zone Offset:	Set from DIP switches or serial command 0 to 23.5 hours in 1/2 hour increments

Switches/Controls:

Pushbutton and toggle switch for setting time manually
8 DIP switches:

- set sweep/step motion
- set default time code rate when no incoming time code
- set timecode offset or allow software control of time offset

Electrical:

Power:	Auto ranging 115/230V AC 50/60Hz 30W or 12V DC from upstream powered clocks
Safety:	Power supply UL listed Complies with EU safety directive
EMI/RFI:	Complies with FCC Part 15 Class A EU EMC Directive

Physical:

Dimensions:	
Model 1212	13" W x 13" H x 2.5" D (330mm W x 330mm H x 64mm D)
Model 1216	17" W x 17" H x 2.5" D (432mm W x 432mm H x 64mm D)
Weight:	
Model 1212	6.5lbs (2.9kg)
Model 1216	10.5lbs (4.75kg)

Ordering Information

1212	12” diameter analog clock display
1216	16” diameter analog clock display
1212L	12” diameter anolog clock display with backlighting
1616L	16” diameter analog clock display with backlighting

1275A

Digital Clock Display

The 1275A is a multifunction time-of-day display that can act as a slave to a master clock system or as a self-contained, presettable clock.

Sixty bright rectangular LEDs are mounted in a circular arrangement simulating an analog second hand. Twelve individual round LEDs indicate the hour. In addition, the hours, minutes and seconds are displayed in digital format.

As a slave display, the unit will read SMPTE/EBU time code. The user can program time zone offsets from the incoming code. The DQS-B6 code format can be specially ordered.

As a standalone clock, it can be programmed to operate in either 12 or 24 hour mode. Two unobtrusive front panel push-buttons allow presetting and accurate synchronization to a standard time source.

An eight-position DIP switch permits user selection of four different operating and display modes and the time zone off-set.

Beautifully finished with black wood trim, the 1275A is ideally suited for studio, lobby, board room or office mounting.

Specifications

Functional:

Code Input:	SMPTE/EBU Time Code 20kΩ balanced or unbalanced DQS-B6 available on special order
Accuracy:	Approximately 1 second per week on internal crystal oscillator
Time Zone:	±12 hours Offset from SMPTE/EBU code input (1 hour increments)

Electrical:

Power:	
1275A-110:	115V, 60Hz, 15W
1275A-220:	220V, 50Hz, 15W
Safety:	ETL Listed
EMI/RFI:	Complies with EU Safety directive Complies with FCC Part 15 Class A EU EMC Directive

Physical:

Dimensions:	9.6” W x 9.6” H x 2.125” D (244mm W x 244mm H x 54mm D) 1” (25mm) diameter hole in rear panel to accomodate electrical conduit
Weight:	4.4lbs

Ordering Information

1274A-110	Digital Clock Display 115V/60Hz
1275A-220	Digital Clock Display 220V/50Hz
1275-xxx-DQS	For DQS-B6

5010-GPSII, 5010-VITC-GPSII

Time Code Generator / Reader with Character Inserter & GPR Antenna

The Evertz 5010-GPSII Time Code Master combines the features of our standard 5010 time code generator with the ability to produce GPS referenced SMPTE/EBU time code anywhere on the face of the globe. The GPS (Global Positioning System) technology provides the 5010-GPSII Time Code Master with an accurate source of time reference. The system is ideally suited for OB or mobile operations and any professional television broadcast applications where accurate time references are a must. The 5010-GPSII system may be programmed to request a time reference from the GPS receiver automatically, daily, or on demand. The 5010-GPSII can be ordered in two configurations. Model 5010-GPSII is an LTC Generator, Reader, Character Inserter with Accutime GPS receiver. Model 5010-VITC-GPSII comes complete with Vertical Interval Time Code capability.

Features & Benefits

- Generates Time code in accordance with SMPTE 12M locked to NTSC or PAL video
- Can be operated as standard time code generator/reader or as a GPS referred time code master
- Date/Time Zone encoded into user bits according to SMPTE 309M
- Generates and reads universal co-ordinated time (UTC) or local time in time/date mode
- Automatic daylight savings time adjustment in time/date mode
- High resolution Character Inserter, with three Character sizes, 8, 16 and 32 lines, time and user bits separately positionable on raster
- Reads LTC from 1/30th to 70x play speed. Well proven input circuitry design permits reliable recovery of even severely distorted code
- Momentary or continuous Jam-sync modes
- Time and user bits are presettable from the front panel
- Parallel control of commonly used functions
- User bit Transfer from Reader Time or User bits
- On-screen programming menu
- GPS receiver, 50ft of cable (optional 100 & 400ft. cables for long receiver distances)
- Ideal for OB or Mobile applications
- Easy mounting and installation
- 2 General purpose outputs can be assigned to several output modes
- Tally output on loss of lock to GPS receiver

Additional Features of the 5010-VITC-GPSII

- Optional bypass relay on 5010-VITC-GPSII
- Vertical Interval Time Code Generator, and Reader
- Separate genlock and PGM video inputs
- Set VITC Generator Line numbers from the front panel
- Translates LTC to VITC or VITC to LTC
- Reads VITC over the full shuttle range of most VTRs
- Selectable reader line range

Specifications

LTC Generator:

Standard:	SMPTE 12M NTSC 2/4 field; PAL 4/8 field menu selectable
Output:	3-pin male XLR type
Level:	Adjustable, 0.5V to 4.5V p-p
Rise Time:	40 ±10ms
Jitter:	< 2ms

LTC Reader:

Standard:	SMPTE 12M Time code
Input:	3 pin female XLR type
Level:	0.2 to 4V p-p, balanced or unbalanced
Speed:	1/30th to 70x play speed, fwd and rev, machine dependent

GPS Receiver:

Temperature:	-30°C to +70°C
Humidity:	95% R.H. Condensing at 60°C
Dimensions:	5.8" D x 3.9" H (147mm x 100mm)
Cable Options:	Standard 50' Optional 100' (order WA-T76) Optional 400' (order WA-T11)

VITC Generator: (5010-VITC-GPSII):

Input:	Composite Video 1Vp-p, 75Ω terminated
Outputs:	2 Composite Video + keyed VITC 1 Output bypass relay protected when +BP option is installed
Differential Gain:	< 0.5%
Differential Phase:	< 0.5°

VITC Reader (5010-VITC-GPSII):

Input:	Composite video 1V p-p, Hi-Z, BNC Loop
Speed:	Still frame to > 40x play

Character Generator:

Input:	Composite video 1V p-p, 75Ω terminated
Output:	Com. video 1V p-p + keyed high resolution characters, selectable background and sizes

Physical:

Dimensions:	19"W x 1.75"H x 7.75"D (483mm W x 45mm H x 196mm D)
Weight:	7lbs (3.5kg)

Electrical:

Power:	Auto ranging 100-240VAC 50/60Hz 30W
Safety:	ETL listed Complies with EU safety directive
EMI/RFI:	Complies with FCC Part 15 Class A EU EMC Directive

Ordering Information

Comes with a standard GPS Receiver and 50ft. weatherproof cable

5010-GPSII	Time Code Generator with GPSII
5010-VITC-GPSII	VITC Time Code Generator with GPSII

Ordering Options

+BP	Bypass relay for 5010-VITC-GPSII
WA-T76	100 Feet Weatherproof Cable for GPS receiver
WA-T11	400 Feet Weatherproof Cable for GPS receiver

5010, 5010-24Fps, 5010-VITC, 5010-VITC-24Fps

Time Code Generator / Reader with Character Inserter

Features & Benefits

- Generates time code in accordance with SMPTE 12M locked to NTSC or PAL video or free run on internal crystal oscillator
- High resolution Character Inserter, with three Character sizes: 8,16 and 32 lines, time and user bits separately positionable on raster
- Reads LTC from 1/30th to 70x play speed
- Well proven input circuitry design permits reliable recovery of even severely distorted code
- Momentary or continuous Jam-sync modes
- Time and user bits are presettable from the front panel
- RS-232 serial port permits interfacing to computers
- 25 Fps ↔ 29.97 Fps SMPTE drop frame time code translator mode
- Parallel control of commonly used functions
- User bit Transfer from Reader Time or User bits
- On-screen programming menu
- Date/Time Zone may be encoded into user bits according to SMPTE 309M
- Generates and reads universal co-ordinated time (UTC) or local time in time/date mode
- Automatic daylight savings time adjustment in time/date mode
- 2 General purpose outputs can be assigned to several output modes

Additional Features of the 5010-VITC

- Vertical Interval Time code Generator and Reader
- Separate genlock and PGM video inputs
- Set VITC Generator Line numbers from the front panel
- Translates LTC to VITC or VITC to LTC
- Reads VITC over the full shuttle range of most VTRs
- Selectable reader line range
- Optional Bypass Relay on VITC Generator

Additional Features of the 5010-24Fps

- Genlocks to 23.98 'slow PAL' or NTSC
- 23.98 Fps ↔ 29.97 Fps time code translator mode
- Momentary or continuous Jam-sync modes
- Locks to 6Hz reference in 24Fps mode

Time Code Feature Comparison

	5010-GPSII	5010-VITC-GPSII	5950	5010	5010-VITC
LTC Generator	✔	✔		✔	✔
Adjustable Output Level	✔	✔		✔	✔
VITC Generator		✔			✔
LTC Reader	✔	✔	✔	✔	✔
VITC Reader		✔	✔		✔
VITC to LTC Translator		✔	✔		✔
LTC to VITC Translator		✔			✔
LTC Re-shaper			✔		
PAL and NTSC	✔	✔	✔	✔	✔
Color Framing	✔	✔		✔	✔
Drop Frame	✔	✔	✔	✔	✔
Set User Bits (0-9, A-F)	✔	✔		✔	✔
Transfer RDR. Time or UB to GEN, UB	✔	✔		✔	✔
SMPTE ↔ EBU Time Code Translator				✔	✔
Date/Time Zone in User Bits	✔	✔		✔	✔
Momentary and Continuous Jam Sync	✔	✔	✔	✔	✔
Character Generator	✔	✔	✔	✔	✔
On-screen Programming Menu	✔	✔		✔	✔
GPS Referenced Time Code	✔	✔			
Serial Remote Control				✔	✔
GPI Remote Control	✔	✔		✔	✔
GP Outputs	✔	✔		✔	✔

Specifications

LTC Generator:

Standard:	SMPTE 12M NTSC 2/4 field; PAL 4/8 field menu selectable NTSC or 24Fps (5010-24Fps only)
Output:	3-pin male XLR type
Level:	Adjustable, 0.5V to 4.5V p-p
Rise Time:	40 ±10 ms
Jitter:	< 2ms

LTC Reader:

Standard:	SMPTE 12M
Input:	3-pin female XLR type
Level:	0.2 to 4V p-p, balanced or unbalanced
Speed:	1/30th to 70x play speed, fwd and rev, machine dependent

VITC Generator (5010-VITC & 5010-VITC-24Fps):

Input:	Comp. Video 1V p-p, 75Ω terminated
Outputs:	2 Comp. Video + keyed VITC 1 Output bypass relay protected when +BP option installed
Differential Gain:	< 0.5%
Differential Phase:	<0.5°

VITC Reader (5010-VITC & 5010-VITC-24Fps):

Input:	Comp. video 1V p-p, Hi-Z, BNC Loop
Speed:	Still frame to > 40x play

Character Generator:

Input:	Comp. video 1V p-p, 75Ω terminated
Output:	Com. video 1V p-p + keyed high resolution characters, selectable background and sizes

Serial Remote Control

RS-232/422 interface, 9-pin "D" connector
Computer control of all functions, selectable baud rate

Physical:

Dimensions:	19"W x 1.75"H x 7.75"D (483mm W x 45mm H x 196mm D)
Weight:	7lbs (3.5kg)

Electrical:

Power:	Auto ranging 100-230VAC 50/60Hz 30W
Safety:	ETL Listed Complies with EU safety directive
EMI/RFI:	Complies with FCC Part 15 Class A EU EMC Directive

Ordering Information

5010	Time Code Generator/Reader
5010-24Fps	NTSC/24Fps Time Code Generator/Reader
5010-VITC	Time Code Generator/Reader with VITC
5010-VITC-24Fps	NTSC/24Fps Time Code Generator/Reader with VITC

Ordering Options

+BP	Optional bypass relay for 5010-VITC, and 5010-VITC-24Fps

5300

Time Code Analyzer

The 5300 LTC/VITC Time Code Analyzer combines the latest LSI technology with sophisticated microcontroller firmware to provide a powerful, flexible time code analyzer system. The 5300 - an LTC/VITC reader/analyzer and multi-function character inserter - is an invaluable verification and troubleshooting tool for the Video, Audio and Film Post Production industries.

Its power and flexibility are unsurpassed in time code analyzer applications. A 16 digit alpha-numeric display can be quickly delegated to show the required data. The Time Code Analyzer contains an LTC and VITC reader that can be operated independently of each other, or can be linked to form an auto LTC/VITC reader.

Features & Benefits

- Detects time code counting sequence errors
- Detects color framing sequence errors with respect to a reference video input
- Detects changes in the status of the color frame input (changing phase, or color/non color changes etc.)
- Detects Time code dropouts and has a user definable dropout length
- Compares LTC and VITC numbers and reports differences between them
- Displays on screen reports of Time code problems
- Audible alarm plus a contact closure to drive an external alarm
- User definable thresholds for most alarm conditions
- Error messages available on RS-232 port for computer logging and time code verification
- On-screen programming and front panel menus
- Dual standard PAL and NTSC
- Detects LTC phase problems with respect to video sync
- High resolution character inserter with three character sizes: 8, 16 and 32 lines, time and user bits separately positionable on screen
- VITC to LTC translator
- Regenerates incoming LTC to correct LTC phase problems

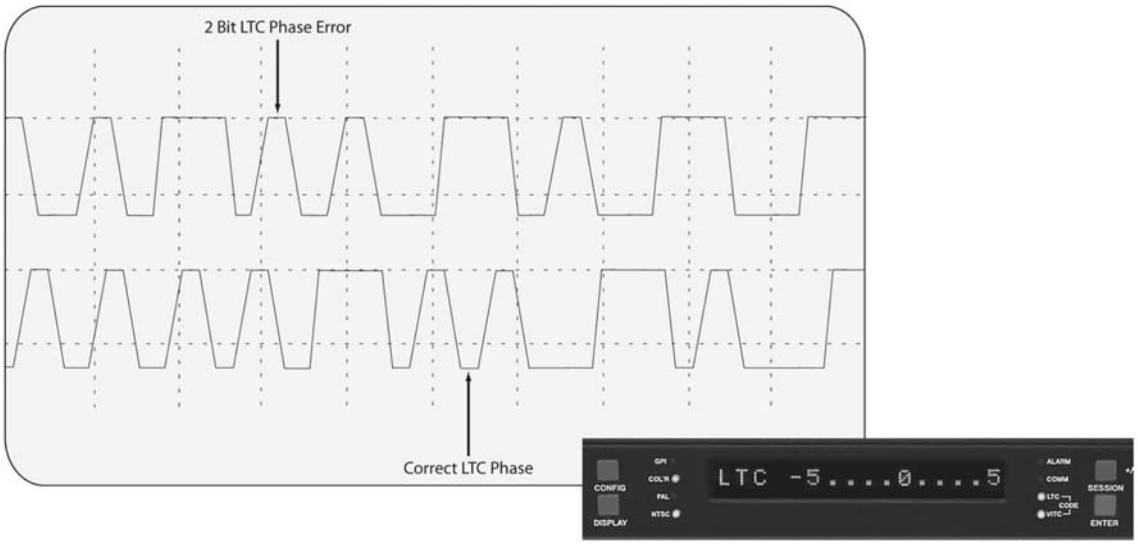

Specifications

LTC Reader:

Standard:	SMPTE 12M 25, 30Fps Drop & Non Drop Frame
Connector:	XLR Type 3 pin female connector
Signal Level:	0.2 to 4V p-p, balanced or unbalanced
Speed:	1/30th to 70x play speed, forward and rev, machine dependent

VITC Reader:

Input:	NTSC or PAL 1V p-p,
Connector:	BNC per IEC 60169-8 Amendment 2
Speed:	Still frame to < 40x play, VTR dependant
Connector:	BNC per IEC 60169-8 Amendment 2

Character Generator:

Input:	Char. Input from VITC Reader input
Output:	NTSC or PAL 1Vp-p + keyed high resolution characters, selectable background and sizes
Connector:	BNC per IEC 60169-8 Amendment 2

LTC Translator:

Connector:	XLR Type 3-pin male
Level:	Adjustable 0.5V to 4.5V p-p
Rise Time:	40 ±10ms
Jitter:	< 2ms
Gen Lock:	Reader input video 1V p-p, Hi-Z, BNC loop

Parallel Remote Control:

Input:	6 TTL compatible inputs for control of selected functions
Output:	2 open collector general purpose outputs

Physical:

Dimensions:	19" W x 1.75" H x 7.75" D (483mm W x 45mm H x 196mm D)
Weight:	7lbs (3.5kg)

Electrical:

Voltage:	115/230V AC, 50/60Hz, 30W
Safety:	ETL Listed Complies with EU safety directive
EMI/RFI:	Complies with FCC Part 15 Class A EU EMC Directive

Ordering Information

5300	Time Code Analyzer

The 5950 is a VITC and LTC Time Code Reader, VITC to LTC Translator and full function Character Inserter with on-screen programming menu. The unit has a 16 digit alpha-numeric display that can be used for displaying Time code, user bits, or operational messages. The 5950 reads SMPTE Drop or Non-Drop Frame or EBU Time code.

The high speed LTC reader in the 5950 employs sophisticated input conditioning and clock/data separator circuits to reliably recover LTC over the full shuttle and wind speed range of most VTRs and ATRs.

The VITC reader employs advanced video processing and data extraction circuitry in combination with intelligent firmware algorithms to accurately decode multi-generation Time code, even off low-end VHS machines. Finely tuned phase locked loop circuits allow the 5950 to recover VITC over the full shuttle range of most VTRs.

The unit can be configured to read either LTC or VITC or can operate in an automatic switchover mode. The 5950 automatically selects valid code from either source and provides accurate Time code reading from still to over 70x play speed. The high resolution Character Inserter can display Time code, user bits, or both. Three character sizes - 8, 16 and 32 lines - are available. The characters can be white with or without a black background, or black with or without a white background. The windows are separately positionable on the raster and can be pushed all the way up into the Vertical Interval if desired.

Features & Benefits

- Reads LTC from 1/30th to 70x play speed
- Full speed VITC Reader with line select
- Automatic LTC/VITC switchover mode
- High resolution Character Inserter, with three character sizes: 8, 16, and 32 lines, time and user bits separately positionable on screen
- Dual standard (NTSC and PAL)
- On-screen programming menu
- VITC to LTC Translator
- LTC regenerator
- 16 digit alpha-numeric display

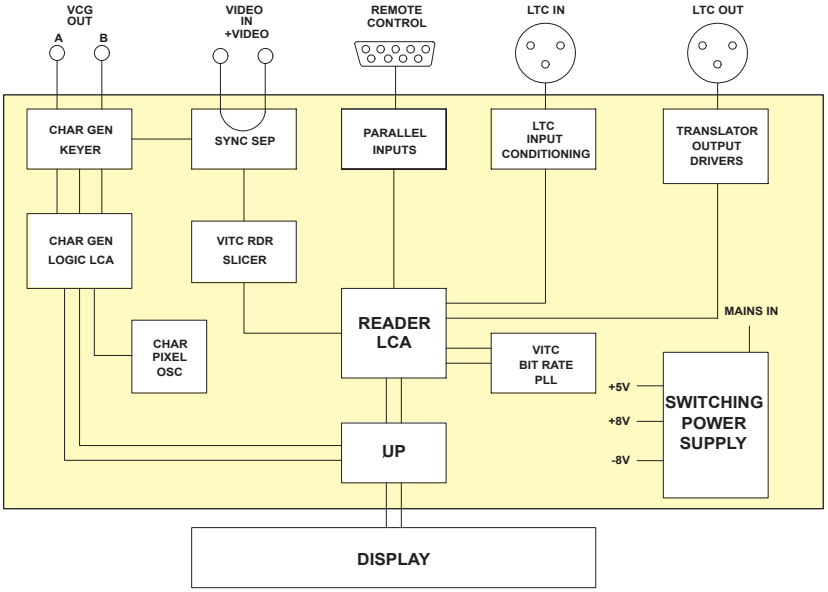

Specifications

LTC Reader:

Standard:	SMPTE 12M 25, 30 Fps Drop & Non Drop Frame
Connector:	XLR Type 3-pin female connector
Signal Level:	0.2 to 4V p-p, balanced or unbalanced
Speed:	1/30th to 70x play speed, forward and reverse machine dependent

VITC Reader:

Input:	NTSC or PAL 1V p-p,
Connector:	BNC per IEC 60169-8 Amendment 2
Speed:	Still frame to < 40x play, VTR dependent
Impedance:	Hi-Z

LTC Translator:

Connector:	XLR Type 3 pin male
Signal Level:	Adjustable 0.5V to 4.5V p-p
Rise Time:	40 ±10ms
Jitter:	< 2ms
Gen Lock:	Reader input video 1V p-p, High, BNC loop

Character Generator:

Input:	Char. Input from VITC Reader input
Output:	NTSC or PAL 1V p-p + keyed high resolution characters, selectable background and sizes
Connector:	BNC per IEC 60169-8 Amendment 2

Parallel Remote Control:

Input:	6 TTL compatible inputs for control of selected functions

Physical:

Dimensions:	19" W x 1.75" H x 7.75" D (483mm W x 45mm H x 196mm D)
Weight:	7lbs (3.5kg)

Electrical:

Voltage:	Auto ranging 100-240V AC, 50/60Hz, 30 Watts
Safety:	ETL listed Complies with EU safety directive
EMI/RFI:	Complies with FCC Part 15 Class A EU EMC Directive

Ordering Information

5950	VITC/LTC Time Code Reader/Character Inserter

5600MSC

Master SPG / Master Clock System

The 5600MSC Master Sync and Clock Generator, is both a broadcast quality master sync pulse generator (SPG) and a master clock. It provides all of the synchronizing signals needed in a 21st century TV station or post production facility at the same time as solving the problem of locking the in-house master clock system to the master video sync pulse generator.

A high stability, temperature controlled oscillator, provides the 5600MSC with better than 5.0×10^{-9} (or 0.005ppm) frequency reference. The free running drift of this 10MHz reference will be less then 0.1Hz (which amounts to less then 1 millisecond time drift per day). This guarantees that any frequency drift, with time and temperature, will be within the tolerances expected from the best SPGs or master clocks available in the industry. The 5600MSC may also be referenced to an external 5 MHz or 10 MHz master oscillator if higher stability is required. Both the SPG and the Master Clock sections, may be referenced to high stability time and frequency standards present in the Global Position System (GPS) by adding the GPS option. The 5600MSC provides a high stability 10MHz output reference for use by other devices.

The SPG section provides two banks of three timeable outputs. These six BNC outputs may be configured to provide 6 independently timed color black (black burst) outputs or 6 independently timed HDTV tri-level sync outputs, or 3 of each signal type. Each color black output can optionally carry vertical interval time code (VITC) on a user specified set of lines.

When referenced to the optional GPS receiver, the start of the NTSC four field sequence, or the PAL eight field sequence, will coincide with a specific point in the GPS code. In this way, by referencing all the 5600MSCs in a system to GPS, they will all be automatically locked to each other. This is ideal for applications requiring remote facility frequency, phase and time locked! GPS heads may be remoted from the unit with standard 50 ft. cables included or optional 100 ft. & 400 ft. weatherproof cables. For remote GPS head requirements of greater than 400 ft. or fiber optic isolation, GPS Data Fiber Transmitters & Receivers are also available (7707GPS-DT, 7707GPS-DR).

The unit also has absolute time reference support (ATR). ATR is a set of data currently being proposed by SMPTE and will be inserted onto the SMPTE 318M universal reference signal. This information gives the absolute time of the signal in seconds, and fractions of a second since the SMPTE Epoch (midnight, January 1, 1958 UTC). ATR tells when the signal was created, regardless of current time when the signal is received and provides an additional means of locking two 5600MSCs together. (This feature will be implemented when the signal is standardized by SMPTE.)

The master clock section provides a primary linear time code (LTC) output on an XLR connector and a 9 pin D connector, as well as a secondary LTC output available only on the 9 pin D connector. The time code may be set from the front panel or referenced to a number of different sources. Having two LTC outputs provides the ability to drive 24 and 30 Fps, or drop-frame and non-drop frame timecode simultaneously. Time may be externally referenced to GPS, or via modem to a high-level time source or extracted from VITC on the reference input. Time derived from such sources can be offset from UTC to a specific time zone as required. When referenced to GPS or by modem, the 5600MSC can provide RFC-1305 compliant NTP via Ethernet, and operates in broadcast and server mode. GPS, NTP and Modem access are all options for the 5600MSC. The 5600MSC includes a battery backed-up real time clock to maintain its time while power is not applied to the unit.

An optional word clock output is available for the 5600MSC (+WC) and also audio word clock may be generated from DARS with 520DARS-W module (Refer to 520DARS-W brochure)

There are two test signal generator options available. The STG option provides a composite analog video test signal output, AES and balanced analog audio tone generators and a digital audio reference output (DARS). The STG option also provides two standard definition SDI test signal outputs and two SDI black outputs. The HTG option provides two high definition SDI test signal outputs and two HD SDI black outputs.

All versions of the 5600MSC offer an AUX I/O port and a COM port for software upgrades and/or interconnecting two 5600MSC units (when used with the 5600ACO). An optional redundant power supply is also available.

Two 5600MSC units in combination with an Automatic Change Over (model 5600ACO) provide an extra degree off reliability where dual redundant installations are required. The ACO provides relay changeover for the two LTC outputs, the six Sync pulse outputs, the 10 MHz reference output, and the GPI/O interface. A serial cable interconnecting the COM ports of the two 5600MSC units guarantees that the configuration and timing of the units are identical so that changeovers are done with minimal disruption of the plant timing reference. The model 5600ACO2 also provides changeover for the optional test generator signals.

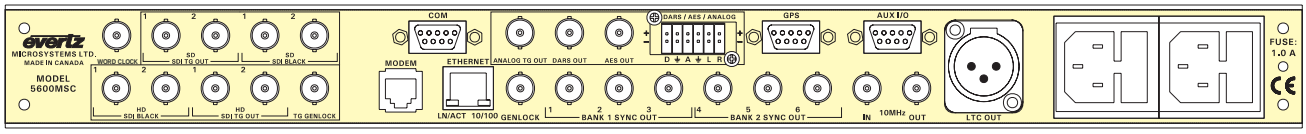

Features & Benefits

- 6 independently timeable reference outputs
- Bi-level or Tri-level outputs selectable (can provide 3 tri-level HD sync outputs and 3 black burst outputs simultaneously)
- 2 Independent LTC Time Code outputs
- 5MHz/10MHz frequency reference input
- GPS option for frequency and time reference
- 10MHz frequency reference output
- Output frequency stability guaranteed better then 5.0×10^{-9} (or 0.005ppm)
- Optional Modem for time reference dial up
- 2 GPS based units will be in time and phase even when remotely separated by miles
- Optional analog TG output, with DARS and analog audio tone outputs
- Optional SD SDI test generator outputs
- Optional HD SDI test generator outputs
- Optional Word Clock output
- Optional Network Time Protocol Server (NTP) server support (GPS option should be ordered with NTP option)
- 16 digit Alpha-numeric display, with 20 pushbuttons
- Rack mountable
- Optional redundant power supply
- Automatic changeover units available for dual redundant systems applications
- Compatible with Dual GPS Data Fiber Receivers & Transmitters
- 2 factory presets and 3 user presets available
- VITC reader on reference input for time reference
- Ten Field Pulse is available on NTSC sync outputs
- Unused menu items can be hidden from user menu
- VistaLINK® control for device configuration and status monitoring

Application Note:

- An optional word clock output is available for the 5600MSC (+WC) and also audio word clock may be generated from DARS with 520DARS-W module (Refer to 520DARS-W brochure)

Specifications

Analog Sync Outputs:
Standards: SMPTE 170M (NTSC-M), ITU-R BT 1700-1 (PAL-B), 625i/48Hz/47.95Hz (Slow-PAL), SMPTE 274M (1080i/60, 1080i/50,1080p/30, 1080p/30sF, 1080p/25, 1080p/25sF, 1080p/24, 1080p/24sF and the 1/1.001 divisor versions where applicable) SMPTE 296M (720/60, 720p/59.94, 720p/50) 1Hz and 6Hz pulse (and the 1/1.001 divisor versions)
Connector: 6 BNC per IEC 60169-8 Amendment 2
Number of Outputs: 6 (2 banks of 3) configured as:
6 color black (black & burst) - selectable with VITC On/Off or 6 HD tri-level sync or 3 color black (black & burst) and 3 HD tri-level sync
All outputs independently timeable
DC Offset: 0V ±0.1V
Return Loss: > 40dB up to 5MHz
SNR: > 75dB

10MHz Input and Output:
Input: 0.5V p-p min level, 75Ω (Relay Bypass Protected)
Output: 1V p-p (75Ω terminated)
Connector: BNC per IEC 60169-8 Amendment 2
Signal Type: Sine wave. Harmonics < 40dB typical
Long Term Oscillator Stability:
Free Running: 0.01ppm
External Ref: 5 or 10 MHz external reference autodetect (max locking range ± 0.1ppm)
GPS with +GP option

LTC Outputs
Standard: SMPTE 12M
Frame Rate: Nominal 24, 25, and 30 (drop frame and non-drop frame)
Number of outputs: 2
Connectors: 3-pin male XLR type, Female DB9
Level:
Unpowered: Adjustable, 0.5V to 4.5V p-p
Powered: 2V p-p with 11V DC offset to drive downstream 1200 series slave clocks
Output Impedance: 66Ω balanced (unpowered)
Rise Time: 40 ±10µs
Jitter: < 2µs

Communications and Control:
Serial Port:
Connector: Female DB-9
Level: RS232
Baud Rate: 57.6 Kbaud
Format: 8 data bits, no parity, 2 stop bits

GPS Receiver (with "+GP" option installed):
Temperature: -40°C to +70°C
Humidity: 95% R.H. Condensing at 60°C
Dimensions: 5.8" D x 3.9" H (147mm x 100mm)

Modem: (with "+M" option installed):
Connector: RJ-11 telephone jack
Baud Rate: 300 baud Bell 103 compatible

Ethernet:
Network Type: Fast Ethernet 100 Base-TX IEEE 802.3u standard for 100 Mb/s baseband CSMA/CD local area network
Ethernet 10 Base-T IEEE 802.3 standard for 10 Mb/s baseband CSMA/CD local area network
Connector: RJ-45
Function: VistaLINK® control
NTP port with +T option installed

NTP Port (+T option installed):
Standard: RFC-1305 compliant, broadast and server mode support
Time must be referenced to GPS or or VITC or have been synchronized via modem within the last 10 days (as per RFC1305)

DARS & AES Test Generator Outputs (with +STG option installed):
Standard:
Unbalanced: SMPTE 276M single ended AES (24-bits) (1V p-p into 75Ω)
Balanced: AES3-1992 (24-bits) (4Vp-p unterminated)
Number of Outputs:
DARS: 1 unbalanced, 1 balanced
AES Test Gen: 1 unbalanced, 1 balanced
Connector:
Unbalanced: BNC per IEC 60169-8 Amendment 2
Balanced: Removable Terminal Strip
Sampling Rate: 48kHz
Impedance:
Unbalanced: 75Ω unbalanced
Balanced: 110Ω balanced
Return Loss: > 25dB to 10MHz (with external 75Ω termination)
AES Tones: Menu selectable

Genlock Input:
Type: Autodetects standard SMPTE 170M (NTSC-M), ITU-R BT.1700-1 (PAL-B), Color Black 1V p-p with optional VITC
Composite Bi-level sync (525i/59.94 or 625i/50) 300mV
HD Tri-level Sync (same HD standards as sync outputs)
Number of Inputs: 1
Connector: BNC per IEC 60169-8 Amendment 2
Video: Max: 2V p-p video
Min: Sync level 150mV
Frequency Lock
Range: ±50ppm from nominal
Input Impedance: High impedance, isolated, differential - external termination required
Return Loss: > 25dB to 10MHz (with external 75Ω termination)

Analog Composite Video Test Signal Generator (with "+STG" option installed):
Standard: SMPTE 170M (NTSC-M)
ITU-R BT.1700-1 470-6 (PAL-B)
Number of Outputs: 1
Connector: BNC per IEC 60169-8 Amendment 2
Signal Level: 1V p-p nominal
DC Offset: 0V ±0.1V
Output Impedance: 75Ω
Return Loss: >35dB to 10MHz (with external 75Ω termination)
SNR: > 75dB

SDI Test Generator Outputs (with "+STG"option installed):
Standard: SMPTE 259M-C (270Mb/s)
Number of Outputs: 2 outputs of selected test signal
2 outputs of black video
Embedded Audio: Up to 4 groups as specified in SMPTE 259M
Connectors: BNC per IEC 60169-8 Amendment 2
Signal Level: 800mV nominal
DC Offset: 0V ±0.5V
Rise and Fall Time: 900ps nominal
Overshoot: < 10% of amplitude
Return Loss: > 15 dB up to 270Mb/s
Jitter: < 0.2 UI
Genlock: Provided internally by 5600MSC

Analog Audio Tone Generator (with "+STG" option installed):
Number of Outputs: 2
Type: Balanced analog audio
Connector: 6 pins on 12-pin removable terminal strips
Output Impedance: 66Ω
Signal Level: -20 to +8dBu into 10kW load

HDTV Test Generator Outputs (with "+HTG" option installed):
Standards: SMPTE 292M 4:2:2, YCbCr
SMPTE 372M dual link 4:4:4 GBRAor YCbCr
Same standards as HD sync outputs
Number of Outputs:
4:2:2: 2 outputs of selected test signal
2 outputs of black video
4:4:4: 2 dual link outputs of selected test signal
Embedded Audio: Up to 4 audio groups as specified in SMPTE 299M. Selectable tone frequencies (from 60Hz to 10kHz) and audio group. Audio can be embedded on test signal or black or both outputs.
Connector: BNC per IEC 60169-8 Amendment 2
Signal Level: 800mV nominal
DC Offset: 0V ±0.5V
Rise and Fall Time: 200ps nominal
Overshoot: < 10% of amplitude
Jitter: < 0.2 UI
Genlock Input: HD Tri-level Sync or NTSC or PAL Color Black 1V p-p, (provided from one of the Sync outputs)

Word Clock Output (with +WC option installed):
Signal: 0,0V-0.5V, 48KHz Word Clock
Connector: BNC per IEC 60169-8 Amendment 2
Number of Outputs: 1

General Purpose Inputs and Output:
Number of Inputs: 2
Number of Outputs: 2 (function menu selectable)
Type: Opto-isolated, active low with internal pull-ups to +5 volts
Connector: 4 pins plus 2 ground pins on 9-pin female D connector
Signal Level: +5V nominal

Physical:
Dimensions: 19" W x 1.75" H x 18.75" D. (483mm W x 45mm H x 477mm D)
Weight: 8lbs (3.5kg)

Electrical:
Voltage: Auto ranging 100 to 240 Volts AC, 50/60Hz
Configuration: Optional redundant supply available with +2PS option
Power: 90 W max (all options installed)
Safety: ETL Listed
Complies with EU safety directives
EMI/RFI: Complies with FCC Part 15 Class A
Complies with EU EMC Directive

Ordering Information

5600MSC	Master SPG/Master Clock System
5600ACO	1RU Automatic Change Over System (see individual brochure)
5600ACO2	2RU Automatic Change Over System (see individual brochure)

Ordering Options (5600MSC)

+2PS	Redundant power supply
+M	Modem Option
+GP	GPS Option (includes GPS receiver and 50' weatherproof cable)
+T	Network Time Protocol (Most be ordered with +GP or +M option)
+STG	• NTSC/PAL test signal generator • Audio tone generator (analog) • DARS generator (balanced & unbalanced) • AES generator (balanced & unbalanced) PLUSan SD SDI Test Generator with 2 SD SDI test signals and 2 SD SDI black
+HTG	HD SDI Test Generator with 2 HD SDI test signals & 2 HD SDI black
+WC	Optional Word Clock Output

Accessories

WA-T76	100' weatherproof cable for 5600MSC, GPSII & 7707GPS-DT
WA-T77	100' weatherproof cable for 7707GPS-DR to 5600MSC
WA-T11	400' weatherproof cable for GPS receiver

For other weatherproof cable lengths, contact factory

For remote GPS head requirements greater than 400' cables or fiber optic isolation order:

7707GPS-DT	Dual GPS Data Fiber Transmitter
7707GPS-DR	Dual GPS Data Fiber Receiver

5600ACO, 5600ACO2

Automatic Changeovers

The 5600ACO/ACO2 Automatic Changeovers are intended for use with two 5600MSC Master Clock/Sync Generators. The 5600ACO/ACO2 system uses latching relays to ensure maximum reliability and minimal disruption in the event of any failure. The complete system provides the highest level of security for television station video and time synchronization systems. The 5600ACO is a 1RU device which is an ACO for a subset of the 5600MSC outputs. The 5600ACO2 is a 2RU ACO for all outputs of the 5600MSC. Two power supplies are included as a standard feature, to alleviate any single point of failure concerns.

The front panel has three switches, recessed into the panel for added security. There is an AUTO/MANUAL switch, a GPI/FRONT PANEL switch and an A/B select switch for manual changeover. In automatic mode, all signals from both 5600MSCs are monitored to detect any abnormal signals. For example, if a level, pulse width, phase, time code error or other abnormality is detected, the 5600ACO's circuitry will trigger and the entire bank of signals will be switched to the backup 5600MSC. In manual mode the changeover can be operated from a GPI or from the front panel switch. LEDs provide status information as to the health of the two 5600MSCs, together with indication as to which one is active. In addition, two GPO outputs indicate which master is active and when the inputs from both masters are not the same.

The 5600ACO2 features selectable voting via VistaLINK® for autochangeover feature. Individual inputs may selectively be included or excluded in the voting process to drive autochangeover logic (Feature only available on 5600ACO2 model).

Each 5600MSC is equipped with 2 GPI inputs and 2 GPO outputs. To facilitate installation, these connections are brought through to a 2x6 pin terminal block on the 5600ACO. The outputs from the 5600MSCs are passed straight through the 5600ACOs. The inputs to the 5600MSCs are internally split by a 'Y' connector, to ensure that both 5600MSCs receive the same GPI contact closures.

In the event of a changeover occurrence, it is necessary that all outputs on one 5600MSC have the same timing as those on the other. Identical timing for both 5600MSCs is assured by locking both to the same frequency and phase source (e.g. GPS or by genlocking one 5600MSC to the other). Identical phasing of the independent black outputs is assured by implementing the "Syncro" mode in the 5600MSCs. To use this mode, both 5600MSC communication ports are connected together using the link cable supplied with the 5600ACO. With both 5600MSCs operating in Syncro mode, timing adjustments made to one 5600MSC will be automatically applied to both. The link cable is connected permanently, so that any system re-timing will be applied to both 5600MSC units (See system connection diagram on 5600MSC brochure).

Features & Benefits

- Three front panel switches select automatic, front panel or GPI activation of changeover
- Front panel switches are recessed to prevent accidental operation
- Front panel status LEDs show the health of each of the inputs
- Front panel status LEDs show the operational modes of the changeover
- Redundant power supply standard
- GPIO input/outputs
- Automatic changeover is a voting system based on which source has the most valid signals and that the valid signals on the present master are also on the backup
- VistaLINK® control for device configuration and status monitoring (5600ACO2 only)

5600ACO Protected Outputs
- 6 video/sync or other coaxial signals
- 10MHz frequency reference
- DARS
- 2 Linear timecode outputs

5600ACO2 Protected Outputs
- 6 video/sync outputs
- 10MHz frequency reference or word clock
- DARS and AES
- 2 Linear timecode outputs
- 4 HD SD SDI test signal outputs
- 4 SD SDI test signal outputs
- 1 Analog video test signal output
- Balanced analog audio output

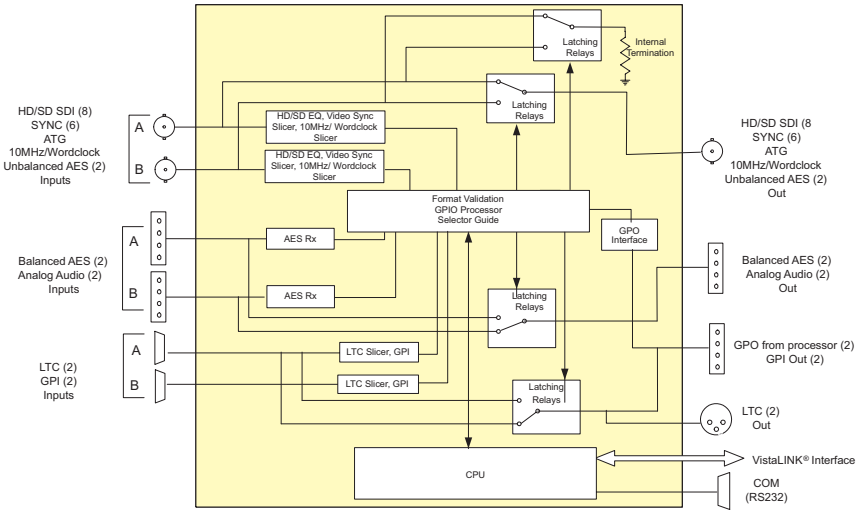

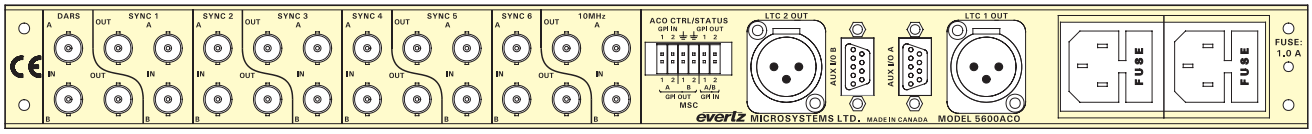

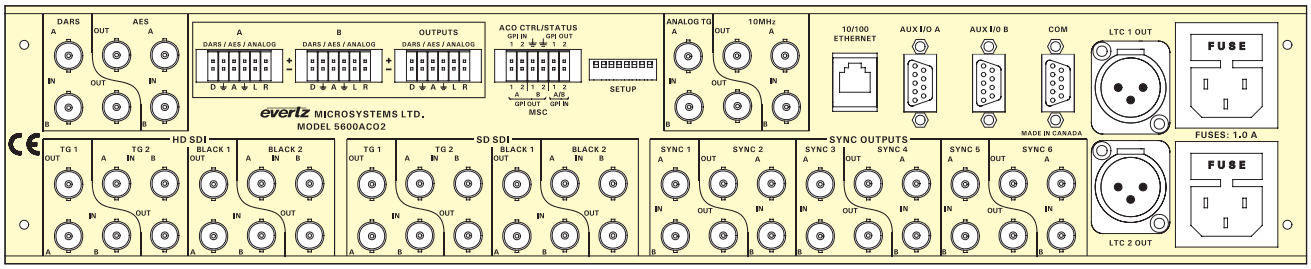

Specifications

LTC Inputs and Outputs:

Standard:	SMPTE 12M frame rate set by 5600MSC
Inputs:	2 per 5600MSC
Outputs:	2
Connectors:	
Inputs:	Female DB9
Outputs:	3-pin male XLR type
Signal Level:	Set in 5600MSC

Coaxial Inputs and Outputs:

Type:	Depends on signal connected from 5600MSC
(5600ACO)	DARS, bi-level or tri-level sync, color black,10MHz
(5600ACO2)	HD SDI, SD SDI, Analog TG, AES, DARS, bi-level or tri-level sync, colour black, 10 MHz, Word Clock
Number:	
(5600ACO)	8 groups each consisting of two inputs and one output
(5600ACO2)	16 groups each consisting of two inputs and one output
Connector:	BNC per IEC 60169-8 Amendment 2

ACO General Purpose Inputs and Output:

Inputs:	
GPI1:	Master select in Manual GPI control mode Low: Selects Master A High: Selects Master B
GPI2:	Future use
Outputs:	
GPO1:	Low: Master A is selected High: Master B is selected
GPO2:	Low: Master A & Master B differ or PSU failure High: Master A and B have equivalent signals
Type:	
Inputs:	Opto-isolated input with internal pull-up to +5 Volts
Outputs:	Normally closed relay to ground. 10kW internal pull-up to +5Volts when relay is in active position
Connector:	4 pins plus 2 ground pins on 12-pin removable terminal block
Signal Level:	+5V nominal

MSC General Purpose Inputs and Output:

Inputs:	2 GPI inputs connected to both Master A and Master B
Outputs:	2 GPI outputs connected from Master A through AUXI/O A 2 GPI outputs connected from Master B through AUXI/O B
Connector:	6 pins on 12-pin removable terminal block
Signal Level:	As specified in 5600MSC manual

Changeover conditions:

Changeover is a voting system based on which source has the most good signals and that the good signals on the current master are also present on the backup master. The input signals are considered good according to the following criteria:

Video:	Level below 70 IRE
Sync:	H timing detect
10MHz:	3dB level below 0.3V p-p
DARS:	Sync word error
LTC:	Level below 0.3V p-p Incorrect sync word

Electrical:

Power:	Auto ranging 100-240 Volts AC, 50/60Hz, 40W
Configuration:	Dual redundant supplies
Fuse Rating:	250V, 1 amp, time delay
Safety:	ETL Listed Complies with EU safety directives
EMI/RFI:	Complies with FCC Part 15 Class A Complies with EU EMC Directive

Physical:

5600ACO:

Dimensions:	19" W x 1.75" H x 18.75" D. (483mm W x 45mm H x 477mm D)
Weight:	8lbs (3.5kg)

5600ACO2:

Dimensions:	19" W x 3.5" H x 18.75" D. (483mm W x 90mm H x 477mm D)
Weight:	16lbs (3.5kg)

Ordering Information

5600ACO	1RU Automatic Changeover System complete with 2 power supplies, 2 power cords and 3 DB9 cables (BNC cables not included)
5600ACO2	2RU Automatic Changeover System completew with 2 power supplies, 2 power cords and 3 DB9 cables (BNC cables not included)

8010TM

SDI Time Code Generator / Reader with Character Reader

The 8010TM SDI Time Code Master is a full function time code reader/generator system for serial digital video. The 8010TM is a combination generator/reader for Linear Time Code (LTC) and Digital Vertical Interval Time Code (D-VITC), and contains a high resolution character inserter that can burn the generator or reader numbers directly into the digital program output as well as an optional analog monitoring output. A 16 digit alphanumeric display can be quickly delegated to show the required data.

The 8010TM will accept 525 or 625 line component digital video. The 8010TM's time code generator can be preset to lock to the digital program video either by simple frame locking, or where necessary it will colour lock to an analog Color Reference in accordance with the 4 field NTSC or 8 field PAL color sequence.

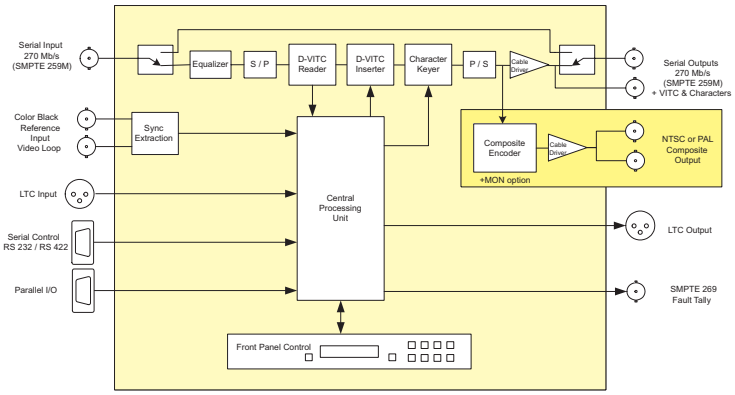

Features & Benefits

- Accepts 4:2:2 (525 and 625 line) digital video signals
- Serial digital video input provides automatic cable equalization on cable lengths up to 200 meters of low loss coax such as Belden 8281
- Optional bypass relay for program path protection on power loss
- Auxiliary serial digital video output (not bypass protected)
- Passes embedded audio and other ancillary data signals
- LTC and D-VITC Time Code Reader with line select
- LTC and D-VITC Time Code generator with line select
- Character Inserter displays reader & generator time and user bits in the picture
- Separate positioning of each character window
- 16 digit Alpha-numeric display, with 16 pushbuttons
- Serial Remote Control of most funstions - Broadcasts reader data or sends it on request
- Rack mountable
- Momentary or continuous jam sync modes
- User bit transfer from reader time or user bits
- EBU/SMPTE Time Code Converter
- Optional composite monitor output converts digital video to analog
- GPI Remote Control mode allows user to pass remote control contact closure information in VITC user bits
- Recalculates EDH after VITC and character insertion
- Optional input bypass relay for power failure bypass protection
- Optional dual power supply configuration

Specifications

Serial Digital Video Input:

Standards:	SMPTE 259M-C (270Mb/s)
Connector:	1 BNC per IEC 60169-8 Amendment 2
Equalization:	Automatic 200m @ 270Mb/s with Belden 8281 or equivalent cable 150m @ 270Mb/s when bypass relay is active
Return Loss:	> 15dB up to 540Mb/s

Serial Digital Video Outputs:

Number of Outputs:	1 with relay bypass (+BP option) 1 additional output
Connector:	BNC per IEC 60169-8 Amendment 2
Signal Level:	800mV nominal
DC Offset:	0V ±0.5V
Rise and Fall Time:	900 ps nominal
Overshoot:	< 10% of amplitude
Return Loss:	> 15dB up to 540Mb/s
Wide Band Jitter:	< 0.2UI

Analog Monitor Video Outputs (with +MON option):

Standards:	Analog composite NTSC if input is 525i/59.94 video Analog composite PAL if input is 625i/50 video
Connectors:	2 BNC per IEC 60169-8 Amendment 2
Signal Level:	1V p-p nominal, internally adjustable
DC Offset:	0V ±0.1V
Return Loss:	> 35dB up to 5 MHz
Frequency Response:	0.8dB to 4MHz
Differential Phase:	< 0.9°(< 0.6° typical)
Differential Gain:	< 0.9% (< 0.5% typical)
SNR:	> 56dB to 5MHz (shallow ramp)
Impedance:	75Ω

LTC Generator:

Standard:	SMPTE 12M NTSC 2/4 field; PAL 4/8 field menu selectable NTSC or 24Fps (5010-24Fps only)
Output:	3 pin male XLR type
Level:	Adjustable, 0.5V to 4.5V p-p
Rise Time:	40 ± 10 ms
Jitter:	< 2 ms

LTC Reader:

Standard:	SMPTE, 12M Time code
Input:	3 pin female XLR type
Level:	0.2 to 4V p-p, balanced or unbalanced
Speed:	1/30th to 70x play speed, fwd and rev, machine dependent

General Purpose Inputs and Outputs:

Inputs:	6, programmable control functions
Outputs:	2, programmable tally functions
Connector:	9 pin female "D"
Type:	Opto-isolated, active low
Signal Level:	Pulled up to +5 volts. 3.3V DC provided

Serial Remote Control:

Standard:	RS-232 or RS-422, programmable baud rate
Connector:	9 pin female "D"
Control:	Firmware upgrade, serial remote control of all functions

Electrical:

Power:	Auto ranging 100-240VAC 50/60Hz 30W
Safety:	ETL listed Complies with EU safety directives
EMI/RFI:	Complies with FCC Part 15 Class A EU EMC Directive

Physical:

Single Power Supply version:

Dimensions:	19" W x 1.75" H x 7.75" D. (483mm W x 45mm H x 196mm D)
Weight:	7 lbs. (3.2 Kg)

Dual Power Supply version:

Dimensions:	19" W x 1.75" H x 18.75" D. (483mm W x 45mm H x 477mm D)
Weight:	8 lbs. (3.5 Kg)

Ordering Information

8010TM	SDI Time Code Generator/Reader with Character Inserter
+BP	Bypass Relay Option

Ordering Options

+2PS	Redundant Power Supply
+MON	Analog Monitoring Option

The 8010TM-IRIG SDI Time Code Master is a full function time code reader/generator system for serial digital video. It is a combination generator for SMPTE Linear Time Code (LTC) and Digital Vertical Interval Time Code (D-VITC), reader for IRIG-B code and D-VITC (standard SMPTE time code and special IRIG encoded VITC), and contains a high resolution character inserter which can burn the generator or reader numbers directly into the digital program output as well as an optional analog monitoring output.

It reads IRIG-B code commonly in use within the United States government agencies and supporting private industries and provides a display of days, hours, minutes, seconds and milliseconds in the character inserter. This IRIG information is inserted into a special line of vertical interval time code which is protected by a unique cyclic redundancy checkword (CRC) so that tape recorders and other devices do not confuse it with standard SMPTE 12M D-VITC. This special D-VITC can be decoded by the 8010TM-IRIG's D-VITC reader to allow you to encode the IRIG information onto a 'clean' video tape and then display the IRIG information later on playback.

The 8010TM-IRIG SMPTE Time code generator can also be slaved to incoming IRIG code. The millisecond count will be converted to the closest frame number and can also be stored in the generator user bits along with the IRIG day of the year. In the continuous jam sync mode, the generator is slaved to the reader, and will follow code any discontinuities of the reader. The generator may also be momentarily synchronized to the reader, and then it continues to increment normally regardless of the reader code. Momentary jam is the recommended mode when synchronizing to IRIG-B sources so that the resulting SMPTE time code does not contain discontinuities due to the different time bases of 29.97 frame per second video and real time of the IRIG code. In NTSC related video systems, the SMPTE generator should be operated in the Drop Frame counting mode when trying to synchronize the SMPTE generator to IRIG.

The 8010TM-IRIG will accept 525 or 625 line component digital video. It's SMPTE time code generator can be preset to lock to the digital program video either by simple frame locking or, where necessary, it will color lock to an analog Color Reference in accordance with the 4 field NTSC or 8 field PAL color sequence. In NTSC related color systems operation, with a frame rate of 29.97002618Hz where the time of day is used for indexing, the generator may be operated in the drop frame mode. Special indicators in the front panel display and in the character inserter indicate that the unit is operating in the drop frame format.

Both the generator and reader are capable of working with the unassigned user bits. Several modes of operation are possible. The generator may be preset to insert hexadecimal values for each group in the generated code, and the reader will read hexadecimal values for each binary group. In addition, the user may select the transfer of either reader time or reader user bits into the generator user bits, thus allowing pre-edit frame addresses to be preserved when new continuous time code is laid down.

The high-resolution character inserter provides six independently positionable windows to show time and user bits for the generator and readers simultaneously. When the IRIG or VITC readers are operating in the IRIG DAY mode, there are two independently positionable windows for each reader to show the IRIG time to millisecond precision and the IRIG day respectively. Three character sizes and the choice of white or black characters with or without contrasting background mask are selected from the front panel.

Features & Benefits

- Accepts 4:2:2 (525 and 625 line) digital video
- Serial digital video input provides automatic cable equalization on cable lengths up to 200 meters of low loss coax such as Belden 8281
- Optional Bypass relay for Serial digital video program output activates on power loss or from the front panel menu
- Auxiliary serial digital video output (not bypass protected)
- Passes embedded audio and other ancillary data signals
- LTC and D-VITC SMPTE Time Code generator
- IRIG data encoded to second line of VITC generator with special CRC
- SMPTE D-VITC Time Code or IRIG encoded D-VITC reader
- IRIG reader reads 1kHz IRIG-B format sine wave amplitude modulated and pulse width modulated codes (formats B002 and B122
- IRIG CS-6 compatible serial data output to drive external IRIG displays)
- SMPTE Time Code LTC and D-VITC generators can be slaved momentarily or continuously to IRIG reader - converts milliseconds to closest video frame number
- Milliseconds and days can be transferred to VITC user bits
- Character Inserter displays IRIG day and time to millisecond resolution in the picture in IRIG modes
- Character Inserter displays time and user bits in the picture in SMPTE modes
- Separate positioning of each character window
- 16 digit Alpha-numeric display, with 16 pushbuttons
- Momentary and Continuous jam sync modes
- User bit transfer from reader time or user bits
- Optional composite monitor output converts digital video to analog
- GPI Remote Control mode allows user to pass remote control contact closure information in VITC user bits
- Recalculates and inserts EDH on the SDI output
- Serial Remote Control of most functions - Broadcasts reader data or sends it on request
- Rack mountable
- Optional dual redundant power supply configuration

Specifications

Serial Digital Video Input:

Standards:	SMPTE 259M (270Mb/s)
Connector:	1 BNC per IEC 60169-8 Amendment 2
Equalization:	Automatic 200m @ 270Mb/s with Belden 8281 or equivalent cable 150m @ 270Mb/s when bypass relay is active
Return Loss:	> 15dB up to 540Mb/s

Serial Digital Video Outputs:

Number of Outputs:	1 with relay bypass (+BP option), 1 additional output
Connector:	BNC per IEC 60169-8 Amendment 2
Signal Level:	800mV nominal
DC Offset:	0V ±0.5V
Rise and Fall Time:	900 ps nominal
Overshoot:	< 10% of amplitude
Return Loss:	> 15dB up to 540Mb/s
Wide Band Jitter:	< 0.2 UI

Analog Monitor Video Outputs (optional):

Standards:	Analog composite NTSC if input is 525i/59.94 video Analog composite PAL if input is 625i/50 video
Connectors:	2 BNC per IEC 60169-8 Amendment 2
Signal Level:	1V p-p nominal, internally adjustable
DC Offset:	0V ±0.1V
Return Loss:	> 35dB up to 5MHz
Frequency Response:	0.8dB to 4 MHz
Differential Phase:	< 0.9° (< 0.6° typical)
Differential Gain:	< 0.9% (< 0.5 % typical)
SNR:	> 56dB to 5MHz (shallow ramp)
Impedance:	75Ω

LTC Generators:

Standard:	SMPTE 12M
Frame Rate:	25 and 30 Fps nominal
Connector:	3-pin male XLR
Level:	Adjustable, 0.5V to 4V p-p

IRIG Reader:

Standard:	IRIG 200-95 Formats B002 and B122
Connector:	3-pin female XLR
Level:	0.2 to 4V p-p, balanced or unbalanced

General Purpose Inputs and Outputs:

Inputs:	6, programmable control functions
Outputs:	2, programmable tally functions
Connector:	9-pin female "D"
Type:	Opto-isolated, active low
Signal Level:	Pulled up to +5 volts. 3.3V DC provided

Serial Remote Control:

Standard:	RS-232 or RS-422, programmable baud rate
Connector:	9-pin female "D"
Control:	Firmware upgrade, serial remote control of all functions

Electrical:

Voltage:	Autoranging 100-240 Volts AC, 50/60Hz
Power:	30W
Fuse Rating:	250V, 1 amp, time delay
Safety:	ETL Listed, complies with EU safety directives
EMI/RFI:	Complies with FCC Part 15 Class A EU EMC Directive

Physical:

Single Power Supply version:

Dimensions:	19" W x 1.75" H x 7.75" D. (483mm W x 45mm H x 196mm D)
Weight:	7lbs (3.2kg)

Dual Power Supply version:

Dimensions:	19" W x 1.75" H x 18.75" D. (483mm W x 45mm H x 477mm D)
Weight:	8lbs (3.5kg)

Ordering Information

8010TM-IRIG	SDI Time Code Generator with IRIG Reader

Ordering Options

+2PS	Redundant Power Supply
+MON	Analog Monitoring Option
+BP	Bypass Relay Option

HD9010TM

HD Time Code Generator and Reader

The HD9010TM HDTV Time Code Master is a full function time code reader/generator system for high definition serial digital video. The HD9010TM is a combination dual generator/dual reader for Linear Time Code (LTC) and RP188 Ancillary Time Code (ATC), and contains a high resolution character inserter which can burn the generator or reader numbers directly into the serial digital program output.

The HD9010TM will accept SMPTE 292M (1.5Gb/s) high definition serial digital video. The HD9010TM's time code generators can be preset to lock to the input video or to an analog color black signal. When generating 24Fps timecode it will also lock to a 6Hz pulse.

The HD9010TM generators can be slaved to incoming LTC or ATC or can be set to free run. The generators may also be momentarily synchronized to one of the readers, and then continue to increment normally regardless of the reader code.

The second LTC output normally follows the primary output, however the two generators can be operated at different frame rates to supply both 24Fps and 30Fps time code when used in a 1080p/24 environment. The drop frame conversion mode allows you to generate Drop Frame code on 1080i/59.94 broadcast master tapes when adding 3:2 pulldown to 1080p/23.98sF source material.

The high-resolution character inserter provides independently positionable windows to show time and user bits for the generator and readers simultaneously. One character size and the choice of white or black characters with or without contrasting background mask are available.

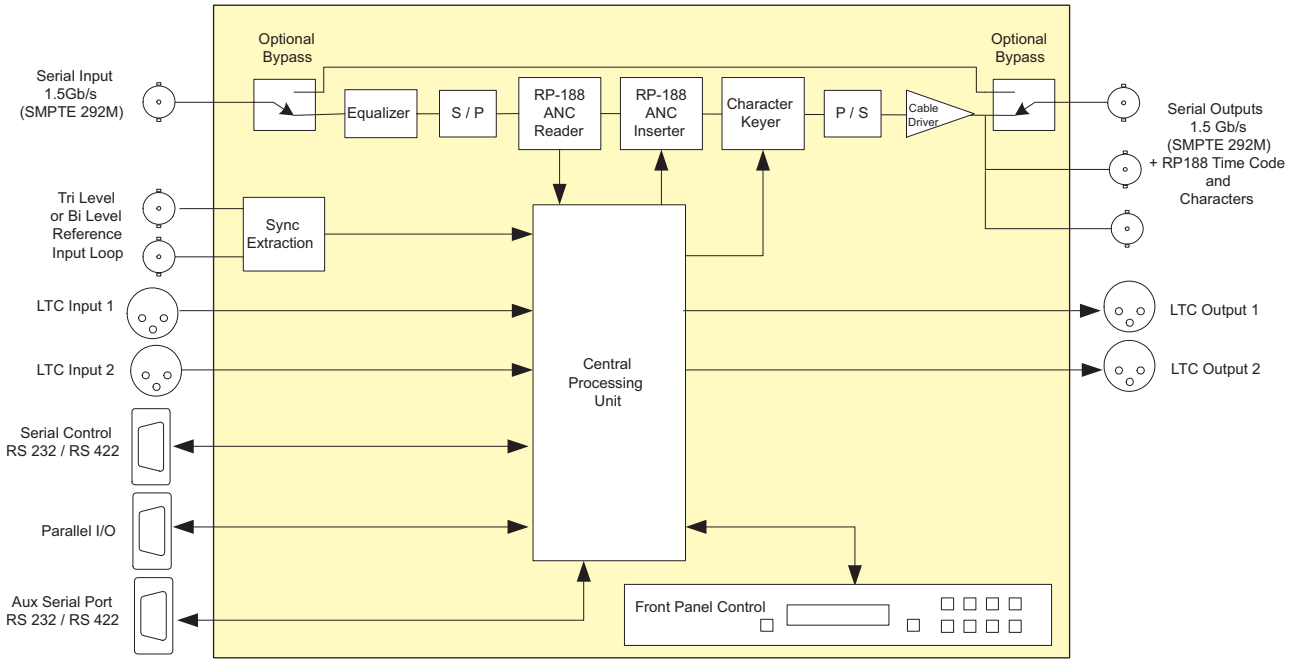

Features & Benefits

- Video formats supported: 1080i/60, 1080i/50, 1080p/30sF, 1080p/25sF, 1080p/24sF, 1035i/60, 720p/60, 720p/50 and the 1/1.001 divisor versions where applicable
- Reads RP188 LTC and VITC ancillary time code (ATC) from incoming video - read line auto detected
- Generates RP188 LTC and VITC ancillary time code on output video
- Two LTC readers and two LTC generators operate at 24, 25 or 30 Fps nominal rate in accordance with SMPTE 12M specification
- Generates 24 Fps and 30 Fps simultaneously
- RP-188 ATC ⇔ LTC translator
- Genlocks to NTSC/PAL colour black or HD Tri-level sync
- Locks to 6 Hz pulse when generating 24 Fps nominal rate code
- Drop frame ⇔ Non drop frame converter
- Character windows for the reader and generator time and user bit data. Windows can be positioned and turned off and on independently
- White or black characters on contrasting background
- Front panel display and control using menu system
- Parallel GPI/O control of common functions
- GPI Remote Control mode allows user to pass remote control contact closure information in RP188 user bits
- Field upgradeable firmware as new features become available
- Optional input relay bypass for power failure bypass protection
- Optional dual power supply configuration

Specifications

Serial Video Input:

Standard:	SMPTE 292M (1.5 Gb/s), SMPTE 274M, SMPTE 296M, SMPTE 349M 1080i/60, 1080i/50, 1080p/30sF, 1080p/25sF, 1080p/24sF, 1035i/60, 720p/60, 720p/50, and the 1/1.001 divisor versions where applicable software selectable or autodetect
Connector:	BNC per IEC 60169-8 Amendment 2
Input Equalization:	Automatic to 100m @ 1.5Gb/s with Belden 1694 or equivalent cable (50m with +HBP option)
Return Loss:	> 15dB up to 1GHz > 10dB up to 1.5GHz (with +HBP option)

Serial Video Output:

Number of Outputs:	1 relay bypassed (with +HBP option) 2 non bypassed
Connectors:	BNC per IEC 60169-8 Amendment 2
Signal Level:	800mV nominal
DC Offset:	0V ±0.5V
Rise and Fall Time:	200ps nominal
Overshoot:	< 10% of amplitude
Jitter:	< 0.2 UI

LTC Generators:

Standard:	SMPTE 12M
Number:	2
Frame Rate:	24, 25 and 30 Fps nominal
Connectors:	3-pin male XLR type connector
Level:	Adjustable, 0.5V to 4.5V p-p
Rise Time:	40 ±10µs
Jitter:	< 2µs

LTC Readers:

Standard:	SMPTE 12M
Number:	2
Frame Rate:	24, 25 and 30 Fps nominal
Connectors:	3-pin female XLR type connector
Level:	0.2 to 4V p-p, balanced or unbalanced
Speed:	1/30th to 50x play speed, VTR dependent

Video Reference:

Type:	Menu selectable - depends on video format NTSC or PAL Color Black 1 V p-p Composite Bi-level sync (525i/59.94 or 625i/50) 300 mV HD Tri-level sync SMPTE 292M (1.5 Gb/s), SMPTE 274M, SMPTE 296M, SMPTE 349M 1080i/60, 1080i/50, 1080p/30sF, 1080p/25sF,1080p/24sF, 1035i/60, 720p/60, 720p/50, and the 1/1.001 divisor versions where applicable software selectable or autodetect
Connectors:	2 BNC per IEC 60169-8 Amendment 2
Termination:	High impedance loop through

General Purpose In/Out:

Number:	6 programmable input or output functions
Type:	Active low with internal pull-ups to +5V
Connector:	Female High Density DB-9
Signal Level:	+5V nominal

Serial Remote Control:

Standard:	RS-232, selectable baud rate
Number of ports:	2
Connector:	9-pin female “D”
Control:	Firmware upgrade, timecode data broadcast

Physical:

Dimensions:	19” W x 1.75” H x 18.75” D (483mm W x 45mm H x 477mm D)
Weight:	8lbs (3.5kg)

Electrical:

Power:	Auto ranging 100 to 240V AC 50/60Hz 40W
Safety:	ETL listed Complies with EU safety directive
EMI/RFI:	Complies with FCC Part 15 Class A EU EMC Directive

Ordering Information

HD9010TM	HD Time Code Generator/Reader

Ordering Options

+HBP	Bypass Relay Protection
+2PS	Redundant Power Supply

HD9010TM-IRIG

HD Time Code Generator with IRIG Reader

The HD9010TM-IRIG HDTV Time Code Master with IRIG-B Reader is a full function time code reader/generator system for SMPTE 292M (1.5 Gb/s) high definition serial digital video. The HD9010TM-IRIG is a combination generator/reader for SMPTE 12M Linear Time Code (LTC) and SMPTE RP188 Ancillary Time Code (ATC), a reader for IRIG-B code, and a generator/reader of Vertical Ancillary Data (VANC) packets containing the IRIG-B code. The HD9010TM also contains a high resolution character inserter that can burn the generator or reader numbers directly into the serial digital program output.

The HD9010TM-IRIG reads IRIG-B code commonly in use within the United States government agencies and supporting private industries and provides a display of days, hours, minutes, seconds and milliseconds in the character inserter. This IRIG information is inserted into a special ancillary data packet in the vertical ancillary data space (VANC) of the SMPTE 292M serial bitstream. This special VANC packet can be decoded by the HD9010TM-IRIG's VANC reader to allow you to encode the IRIG information onto a 'clean' video tape and then display the IRIG information later on playback.

The HD9010TM-IRIG SMPTE Time code generator is output as LTC and ATC and can also be slaved to incoming IRIG serial time code. The millisecond count will be converted to the closest frame number and can also be stored in the generator user bits along with the IRIG day of the year. In the continuous jam sync mode, the generator is slaved to the IRIG-B reader, and will follow code any discontinuities of the reader.

The generator may also be momentarily synchronized to the IRIG-B reader, and then it continues to increment normally regardless of the reader code. Momentary jam is the recommended mode when synchronizing to IRIG-B sources so that the resulting SMPTE time code does not contain discontinuities due to the different time bases of 29.97 frame per second video and real time of the IRIG code. In NTSC related video systems, the SMPTE generator should be operated in the Drop Frame counting mode when trying to synchronize the SMPTE generator to IRIG.

The HD9010TM-IRIG SMPTE Time code generator can also be slaved to incoming LTC or ATC, or can be set to free run. The generator may also be momentarily synchronized to one of the readers, and then continue to increment normally regardless of the reader code. The second LTC output normally follows the primary output, however the two generators can be operated at different frame rates to supply both 24Fps and 30Fps time code when used in a 1080p/24 environment.

The high-resolution character inserter provides independently positionable windows to show time and user bits for the SMPTE generator and readers simultaneously. When the IRIG or VANC readers are operating in the IRIG DAY mode, there are two independently positionable windows for each reader to show the IRIG time to millisecond precision and the IRIG day respectively. The choice of white or black characters with or without contrasting background mask is available.

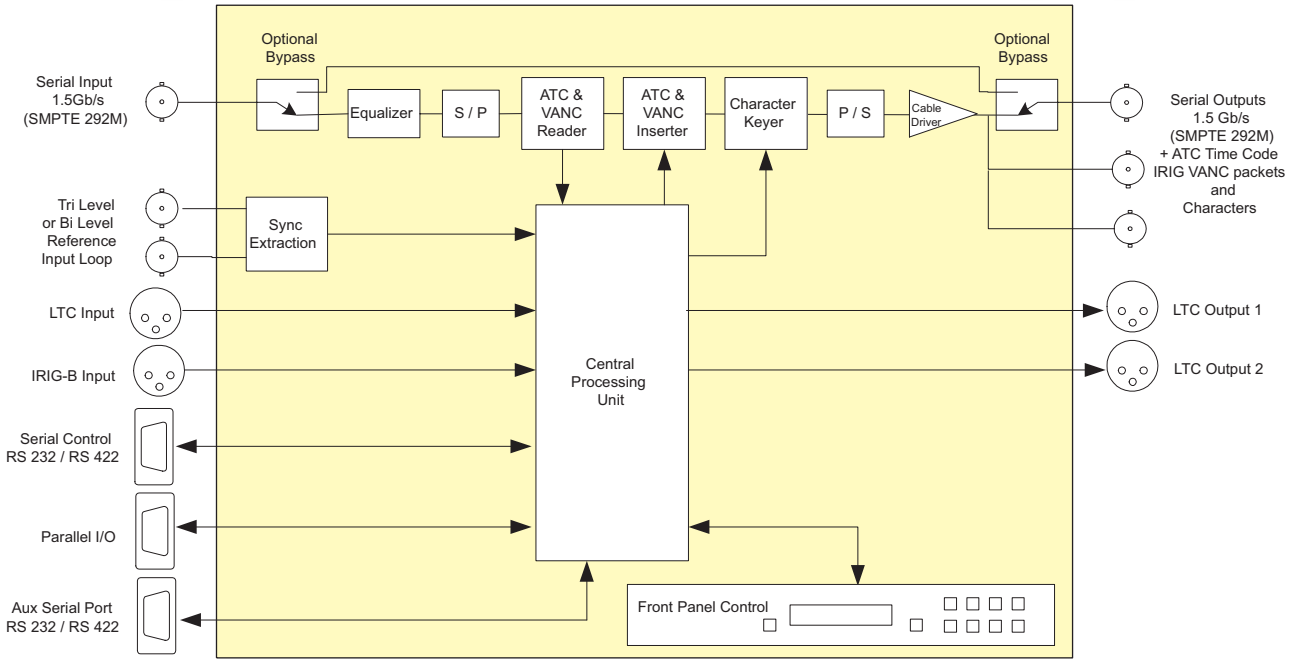

Features & Benefits

- Video formats supported: 1080i/60, 1080i/50, 1080p/30sF, 1080p/25sF, 1080p/24sF, 1035i/60, 720p/60, 720p/50 and the 1/1.001 divisor versions where applicable
- IRIG reader reads 1kHz IRIG-B format sine wave amplitude modulated and pulse width modulated codes (formats B122 and B022)
- Encodes IRIG data and optional metadata in VANC packets on output video
- Reads IRIG data encoded in VANC packet from incoming video
- Generates RP188 LTC and VITC ancillary timecode packets on output video
- IRIG CS-6 compatible serial data output to drive external IRIG display
- Reads RP188 LTC and VITC ancillary time code (ATC) packets
- Insertion line for VANC packets programmable, read line auto detected
- One LTC reader and two LTC generators operate at 24, 25 or 30Fps nominal rate in accordance with SMPTE 12M specification
- Generates to 24 Fps and 30 Fps LTC simultaneously
- RP-188 ⇔ LTC translator
- Genlocks to NTSC/PAL color black or HD Tri-level sync
- Character windows for the reader and generator time and user bit data
- Windows can be positioned and turned off and on independently
- White or black characters on contrasting background
- Front panel display and control using menu system
- Parallel GPI/O and serial remote control
- Field upgradeable firmware as new features become available
- Optional input relay bypass for power failure bypass protection
- Optional dual power supply configuration

Specifications

HDTV Serial Digital Video Input:

Standard:	SMPTE 292M (1.5 Gb/s), SMPTE 274M, SMPTE 296M, SMPTE 349M 1080i/60, 1080i/50, 1080p/30sF, 1080p/25sF, 1080p/24sF, 1035i/60, 720p/60, 720p/50 and the 1/1.001 divisor versions where applicable software selectable or autodetect
Connector:	BNC per IEC 60169-8 Amendment 2
Equalization:	Automatic to 100m @ 1.5Gb/s with Belden 1694A or equivalent cable

HDTV Serial Digital Video Outputs:

Standard:	SMPTE 292M, same as input
Outputs:	2 Program video with RP188 Ancillary time code embedded and optional characters
Connectors:	BNC per IEC 60169-8 Amendment 2
Signal Level:	800mV nominal
DC Offset:	0V ±0.5V
Rise and Fall Time:	200ps nominal
Overshoot:	< 10% of amplitude
Wide Band Jitter:	< 0.2 UI

Reference Input:

Type:	Menu selectable - depends on video format NTSC or PAL Color Black 1 V p-p Composite Bi-level sync (525i/59.94 or 625i/50) 300 mV HD Tri-level sync SMPTE 292M (1.5 Gb/s), SMPTE 274M, SMPTE 296M, SMPTE 349M 1080i/60, 1080i/50, 1080p/30sF, 1080p/25sF,1080p/24sF, 1035i/60, 720p/60, 720p/50, and the 1/1.001 divisor versions where applicable software selectable or autodetect
Connector:	BNC loop per IEC 60169-8 Amendment 2
Termination:	High Impedance loop

LTC Generator:

Standard:	SMPTE 12M
Number:	2
Frame Rate:	24, 25 and 30 Fps nominal
Connectors:	3-pin male XLR type connector
Level:	Adjustable, 0.5V to 4.5V p-p
Rise Time:	40 ± 10 µs
Jitter:	< 2 µs

LTC Reader:

Standard:	SMPTE 12M
Frame Rate:	24, 25 and 30 Fps nominal
Connector:	3-pin female XLR type connector
Level:	0.2 to 4V p-p, balanced or unbalanced
Speed:	1/30th to 50 x play speed, VTR dependent

IRIG Reader:

Standard:	IRIG 200-95 Formats B002 and B122
Connector:	3-pin female XLR type connector
Level:	0.2 to 4V p-p, balanced or unbalanced

Serial Remote Control:

Standard:	RS-232, selectable baud rate
Connector:	9-pin female "D"
Control:	Firmware upgrade

Physical:

Dimensions:	19" W x 1.75" H x 18.75" D. (483mm W x 45mm H x 477mm D)
Weight:	8lbs (3.5kg)

Electrical:

Power:	Auto ranging 100-240V AC 50/60Hz 40W
Safety:	ETL listed Complies with EU safety directive
EMI/RFI:	Complies with FCC Part 15 Class A, EU EMC Directive

Ordering Information

HD9010TM-IRIG	HD Time Code Master with IRIG Reader

Ordering Options

+HBP	Bypass Relay Protection
+2PS	Redundant Power Supply

2405EO

SDI Miniature Optical Transmitter 19.4Mb/s or 143-540Mb/s

Features & Benefits

- Reclocking for all SDTV video rates including SMPTE 259M (143Mb/s-360Mb/s), SMPTE 310M (19.4Mb/s), SMPTE 344M (540Mb/s), M2S, and DVB-ASI (270Mb/s)
- Available in 1310nm, 1550nm and up to sixteen different CWDM wavelengths (ITU-T G.694.2 compliant)
- Automatic laser shutdown on absence of input signal for extended laser life
- Supports single-mode and multi-mode fiber optic cable
- Immunity to video Pathological signals
- Long reach transmission capability
- Rugged, small form factor enclosure
- Low Power, +12V DC operation

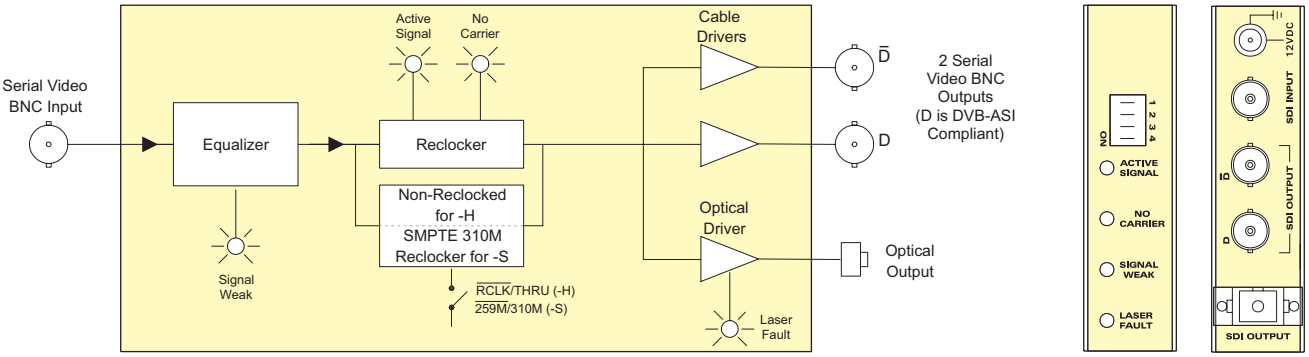

Specifications

Standards : SMPTE 259M (A, B, C, D), SMPTE 297M, SMPTE 310M, SMPTE 344M, M2S, & DVB-ASI

Serial Video BNC Input:

Number of Inputs:	1
Connector:	BNC per IEC 60169-8 Amendment 2
Equalization:	Automatic to 300m @ 270Mb/s with Belden 8281 (or equivalent)
Return Loss:	> 15dB up to 540MHz

Serial Video BNC Output:

Number of Outputs:	2 (1 output DVB-ASI/M2S compliant)
Connector:	BNC per IEC 60169-8 Amendment 2
Signal Level:	800mV nominal
DC Offset:	0V ±0.5V
Rise, Fall Time:	900ps nominal
Overshoot:	< 10% of amplitude
Return Loss:	> 15dB up to 540MHz
Wideband Jitter:	< 0.2 UI

Optical Output:

Number of Outputs:	1
Connector:	SC/PC, ST/PC, FC/PC Female
Return Loss:	> 14dB
Rise, Fall Time:	400-700ps
Jitter:	< 0.2UI
Optical Power:	
1310nm FP:	-7dBm ±1dBm
1550nm DFB:	0 dBm ±1dBm
CWDM DFB:	0 dBm ±1dBm

Physical:

Dimensions:	With Flanges: 6"L x 4"W x 1"H (152mm L x 114mm W x 25mm H)
Weight:	0.5lbs (0.28kg)

Electrical:

Voltage:	Auto ranging 100-240VAC 12V DC 50/60Hz (adapter included)
Power:	6W

Compliance:

Safety:	Power supply UL Listed Complies with EU low voltage directive
Laser Safety:	Class 1 laser product Complies with 24 CFR 1040.10 and 1040.11 IEC 60825-1
EMI/RFI:	Complies with FCC Part 15, Class A EU EMC directive

Ordering Information

2405EO3F	SDI Miniature Optical Transmitter 1310nm FP, Laser
2405EO5D	SDI Miniature Optical Transmitter 1550nm DFB Laser

For CWDM, please refer to the end of the fiber section for ordering information

2405EOxx	SDI Miniature Optical Transmitter CWDM DFB Laser

All 2405 modules include power supply

Ordering Options Fiber Connector must be specified at time of order
Eg: Model +SC

Connector Suffix

+SC	SC/PC
+ST	ST/PC
+FC	FC/PC

Fiber Optic Patch Cable

CB-FP1M-SCPC	Single mode fiber cable, 1m, SC/PC male termination
CB-FP1M-STPC	Single mode fiber cable, 1m, ST/PC male termination
CB-FP5M-SCPC	Single mode fiber cable, 5m, SC/PC male termination
CB-FP5M-STPC	Single mode fiber cable, 5m, ST/PC male termination
CB-FP10M-SCPC	Single mode fiber cable, 10m, SC/PC male termination
CB-FP10M-STPC	Single mode fiber cable, 10m, ST/PC male termination

Features & Benefits

- Reclocking for all SDTV video rate including SMPTE 259M (143Mb/s-540Mb/s), SMPTE 310M (19.4Mb/s), SMPTE 344M (540Mb/s), M2S and DVB-ASI (270Mb/s)
- Automatic signal failure switching for optical input
- Immunity to video Pathological signals
- Supports single-mode and multi-mode fiber optic cable
- Rugged, small form factor enclosure
- Low Power, +12V DC operation

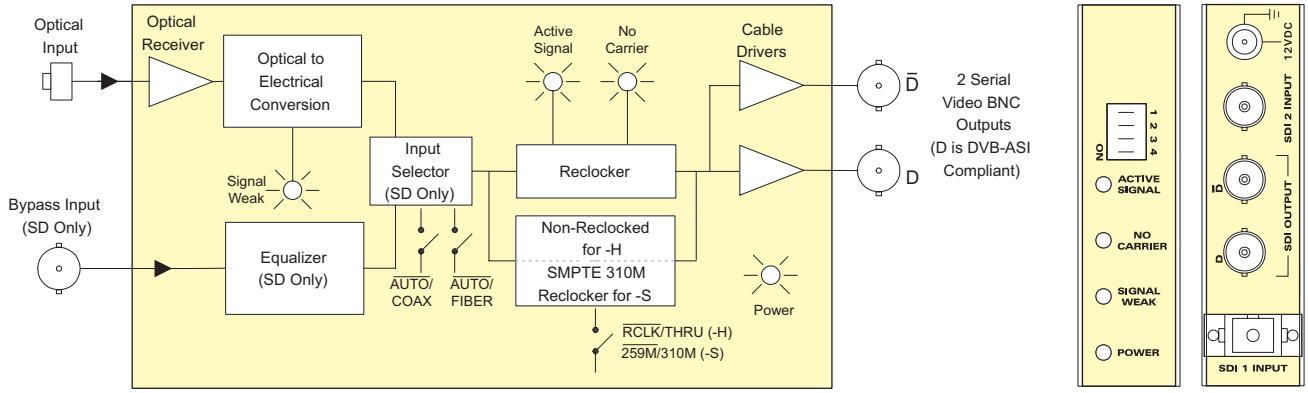

Specifications

Standards SMPTE 259M (A, B, C, D) , SMPTE 297M, SMPTE 310M, SMPTE 344M, M2S, DVB-ASI

Serial Video BNC Input
Number of Inputs: 1
Connector: BNC per IEC 60169-8 Amendment 2
Equalization: Automatic to 300m @ 270Mb/s with Belden 8281 (or equivalent)
Return Loss: > 15dB up to 540MHz

Optical Input
Number of Inputs: 1
Operating Wavelength: 1270nm to 1610nm
Maximum Input Power: 0dBm
Optical Sensitivity: -32 dBm
Connector: SC/PC, ST/PC, FC/PC Female Housing

Serial Video BNC Output:
Number of Outputs: 2 (1 output DVB-ASI/M2S compliant)
Connector: BNC per IEC 60169-8 Amendment 2
Signal Level: 800mV nominal
DC Offset: 0V ±0.5V
Rise, Fall Time: 900ps nominal
Overshoot: < 10% of amplitude
Return Loss: > 15dB up to 540MHz
Wideband Jitter: < 0.2 UI

Physical
Dimensions: With Flanges: 6"L x 4"W x 1"H (152mm L x 114mm W x 25mm H)
Weight: 0.5lbs (0.28kg)

Electrical
Voltage: Auto ranging 100-240VAC 12V DC 50/60Hz (adapter included)
Power: 6W

Compliance:
Safety: Power supply UL Listed
Complies with EU low voltage directive

Ordering Information

2405OE SDI Miniautre Optical Receiver, 19.4Mb/s or 143-540Mb/s

All 2405 modules include power supply

Ordering Options Fiber Connector must be specified at time of order
Eg: Model +SC

Connector Suffix
+SC SC/PC
+ST ST/PC
+FC FC/PC

Fiber Optic Patch Cable
CB-FP1M-SCPC Single mode fiber cable, 1m, SC/PC male termination
CB-FP1M-STPC Single mode fiber cable, 1m, ST/PC male termination
CB-FP5M-SCPC Single mode fiber cable, 5m, SC/PC male termination
CB-FP5M-STPC Single mode fiber cable, 5m, ST/PC male termination
CB-FP10M-SCPC Single mode fiber cable, 10m, SC/PC male termination
CB-FP10M-STPC Single mode fiber cable, 10m, ST/PC male termination

2405EO-HD

HDTV Miniature Optical Transmitter 19.4Mb/s or 1.5Gb/s

Features & Benefits

- Operation from 19.4Mb/s to 1.5Gb/s
  - Reclocking for SMPTE 292M (1.485Gb/s)
  - Non-reclocking for all other rates from 19.4Mb/s to 1.5Gb/s including SMPTE 259M, SMPTE 305M, SMPTE 310M, M2S and DVB-ASI
- Available in 1310nm, 1550nm, and up to sixteen different CWDM wavelengths (ITU-T G.694.2 compliant)
- Automatic laser shutdown on absence of input signal for extended laser life
- Supports single-mode and multi-mode fiber optic cable
- Immunity to video Pathological signals
- Rugged, small form factor enclosure
- Low Power, +12V DC operation

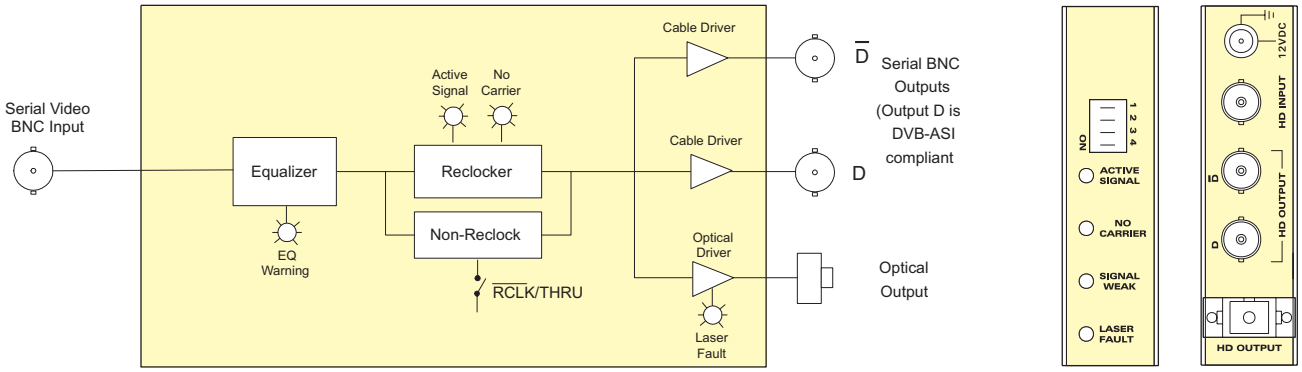

*Note: Non-reclock Mode will operate 19.4Mb/s to 1.5Gb/s

Specifications

Standards
SMPTE 292M, 259M, 297M, 310M, M2S, DVB-ASI, and any bi-level Telecom/Datacom signal from 19.4Mb/s to 1.5Gb/s

Serial Video BNC Input

Number of Inputs:	1
Connector:	BNC per IEC 60169-8 Amendment 2
Equalization:	Automatic to 125m @ 1.485Gb/s with Belden 1694A (or equivalent)
Return Loss:	> 15dB up to 1.485GHz

Serial Video BNC Output

Number of Outputs:	2 (1 output DVB-ASI/M2S compliant)
Connector:	BNC per IEC 60169-8 Amendment 2
Signal Level:	800mV nominal
DC Offset:	0V ±0.5V
Rise, Fall Time:	270ps nominal
Overshoot:	< 10% of amplitude
Return Loss:	> 15dB up to 1.485GHz
Wideband Jitter:	< 0.2 UI

Optical Output

Number of Outputs:	1
Connector:	SC/PC, ST/PC, FC/PC Female Housing
Return Loss:	> 14dB
Rise, Fall Time:	200ps nominal
Jitter:	< 0.2 UI reclocked
Nominal Wavelength:	
Standard:	1310nm, 1550nm
CWDM:	1270nm-1610nm (See Ordering Info)

Optical Power

1310nm FP:	-7dBm ±1dBm
1310nm/1550nm DFB:	0 dBm ±1dBm
CWDM DFB:	0 dBm ±1dBm

Physical

Dimensions:	With Flanges: 6"L x 4"W x 1"H (152mm L x 114mm W x 25mm H)
Weight:	0.5lbs (0.28kg)

Electrical

Voltage:	+12V DC
Power:	6W
Safety:	Complies with EU Safety Directive
EMI/RFI:	Complies with FCC Part 15, Class A EU EMC Directive

Ordering Information

2405EO3F-HD	HD Miniature Optical Transmitter 1310nm, FP Laser
2405EO3D-HD	HD Miniature Optical Transmitter 1310nm, DFB Laser
2405EO5D-HD	HD Miniature Optical Transmitter 1550nm, DFB Laser

For CWDM, please refer to the end of the fiber section for ordering information

2405EOxx-HD	HD Miniature Optical Transmitter CWDM DFB Laser

All 2405 modules include power supply

Fiber Optic Patch Cable

CB-FP1M-SCPC	Single mode fiber cable, 1m, SC/PC male termination
CB-FP1M-STPC	Single mode fiber cable, 1m, ST/PC male termination
CB-FP5M-SCPC	Single mode fiber cable, 5m, SC/PC male termination
CB-FP5M-STPC	Single mode fiber cable, 5m, ST/PC male termination
CB-FP10M-SCPC	Single mode fiber cable, 10m, SC/PC male termination
CB-FP10M-STPC	Single mode fiber cable, 10m, ST/PC male termination

Ordering Options
Fiber Connector must be specified at time of order
Eg: Model +SC

Connector Suffix

+SC	SC/PC
+ST	ST/PC
+FC	FC/PC

Features & Benefits

- Operation from 19.4Mb/s to 1.5Gb/s
  - Reclocking for SMPTE 292M (1.48Gb/s)
  - Non-reclocking for all other rates from 19.4Mb/s to 1.5Gb/s including SMPTE 259M, SMPTE 305M, SMPTE 310M, M2S and DVB-ASI
- Immunity to video Pathological signals
- Supports single-mode and multi-mode fiber optic cable
- Rugged, small form factor enclosure
- Low Power, +12V DC operation

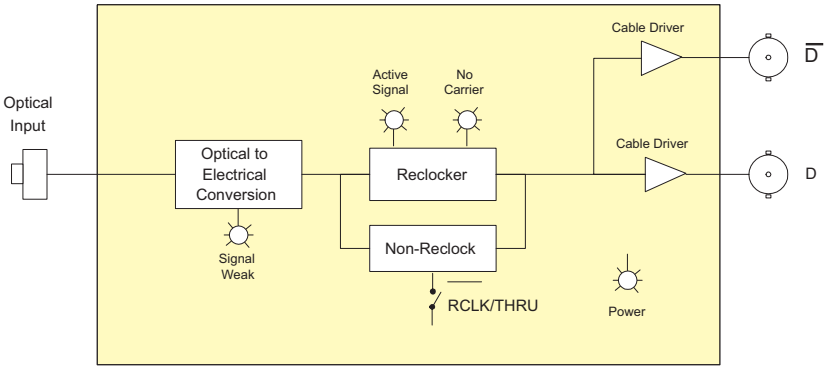

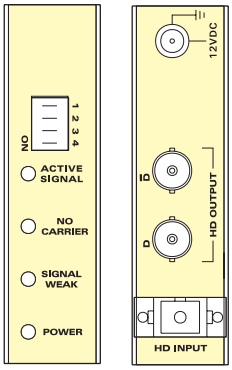

*Note: Non-reclock Mode will operate 19.4Mb/s to 1.5Gb/s

Specifications

Standards
SMPTE 292M, 259M, 297M, 310M, M2S, DVB-ASI, and any bi-level Telecom/Datacom signal from 19.4Mb/s to 1.5Gb/s

Optical Input
Number of Inputs: 1
Operating Wavelength: 1270nm to 1610nm
Max. Input Power: -1dBm
Optical Sensitivity: -23dBm
Connector: SC/PC, ST/PC, FC/PC Female Housing

Serial Video BNC Outputs
Number of Outputs: 2 (1 output DVB-ASI/M2S compliant)
Connector: BNC per IEC 60169-8 Amendment 2
Signal Level: 800mV nominal
DC Offset: 0V ±0.5V
Rise, Fall Time: 270ps nominal
Overshoot: < 10% of amplitude
Return Loss: > 15dB up to 1.485GHz
Wideband Jitter: < 0.2 UI

Physical
Dimensions: With Flanges: 6"L x 4"W x 1"H (152mm L x 114mm W x 25mm H)
Weight: 0.5lbs (0.28kg)

Electrical
Voltage: +12V DC
Power: 6W
Safety: Complies with EU Safety Directive
EMI/RFI: Complies with FCC Part 15, Class A EU EMC Directive

Ordering Information

2405OE-HD HD Miniautre Optical Receiver, 19.4Mb/s to 1.5Gb/s

All 2405 modules include power supply

Ordering Options Fiber Connector must be specified at time of order
Eg: Model +SC

Connector Suffix
+SC SC/PC
+ST ST/PC
+FC FC/PC

Fiber Optic Patch Cable
CB-FP1M-SCPC Single mode fiber cable, 1m, SC/PC male termination
CB-FP1M-STPC Single mode fiber cable, 1m, ST/PC male termination
CB-FP5M-SCPC Single mode fiber cable, 5m, SC/PC male termination
CB-FP5M-STPC Single mode fiber cable, 5m, ST/PC male termination
CB-FP10M-SCPC Single mode fiber cable, 10m, SC/PC male termination
CB-FP10M-STPC Single mode fiber cable, 10m, ST/PC male termination

2407DVIT

DVI / KVM Miniature Fiber Transmitter

The 2407DVIT is a minature DVI/KVM fiber transmitter for high resolution/high quality video signals. This self-contained module accepts one DVI video input up to WUXGA resolution and transmits it over a single or dual fiber. The 2407DVIT is also available with analog audio, keyboard + mouse and USB options.

The companion 2407DVIR DVI/KVM Fiber Receiver demultiplexes the signals and converts them back to digital DVI. The fiber output is available in an assortment of optical wavelengths, accommodating 1310/1550nm and CWDM transmission schemes.

Features & Benefits

- Supports DVI transport over a single or dual fiber
- VESA video resolutions supported up to WUXGA
- Full 24 bits-per-pixel color resolution
- Ideal for use with high resolution LCD, plasma and projection screens
- Superior digital data transmission
- Rugged small form factory enclosure
- Supports single-mode and multi-mode fiber optic cable
- Optical output wavelengths at 1310nm, 1550nm and up to sixteen CWDM wavelengths (ITU-T G.694.2 compliant)
- Optional 2 channel stereo analog audio
- Optional keyboard + mouse
- Optional USB interface
- Optional copper I/O (Please contact factory)

2407DVIT Application Configurations

FIBER TYPE	FIBERS	OPTICAL/LINK BUDGET	TRANSMIT SIDE		RECEIVE SIDE		DESCRIPTION
			ORDERING PRODUCT INFO	TX POWER	ORDERING PRODUCT INFO	RX SENSITIVITY	
Multi-Mode	2	< 300m	2407DVIT13-A2KM-USB-F2	-7dBm	2407DVIR13-A2KM-USB-F2	-19dBm	1310nm on Tx & Rx fibers
Single-Mode	2	12dB/34km	2407DVIT13-A2KM-USB-F2	-7dBm	2407DVIR13-A2KM-USB-F2	-19dBm	1310nm on Tx & Rx fibers
Single-Mode	1	8dB/20km*	2407DVIT15-A2KM-USB-W	-1dBm	2407DVIR13-A2KM-USB-W	-17dBm	1310nm/1550nm WDM bi-directional, one fiber
Single-Mode	1(CWDM)	15.5dB/60km**	2407DVITxx-A2KM-USB-F2	0dBm	2407DVIRyy-A2KM-USB-F2	-19dBm	Different CWDM wavelengths for Tx & Rx, with 8 channel CWDM Mux/Demux**

* With >20dB return loss on fiber interface
** Assumes 8 Ch CWDM Mux/Demux loss of 3.5dB

Tx Power/Rx Sensitivity are nominal values ±1dBm
Fiber loss= 0.35/0.25dB per km @ 1310nm/1550nm

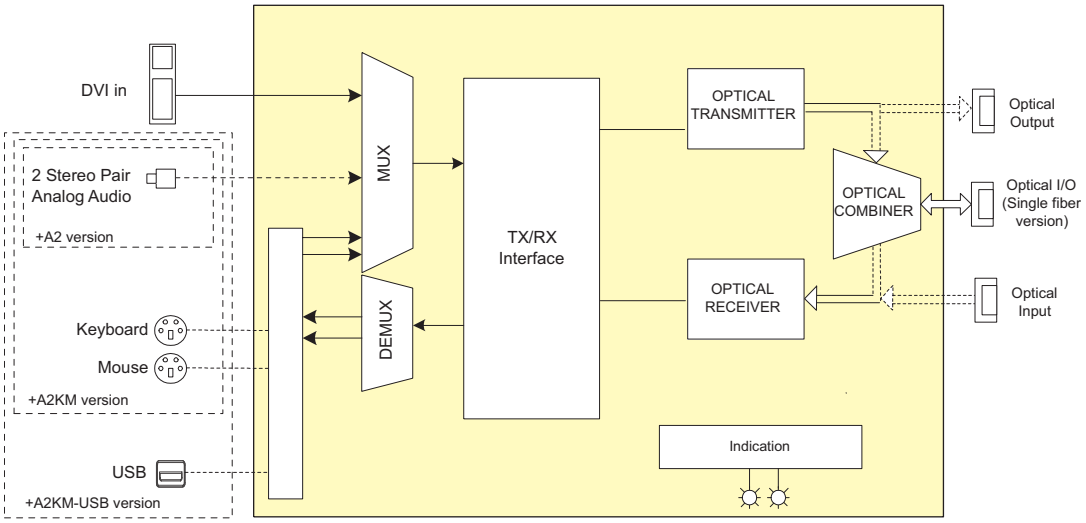

2407DVIT Side Panels

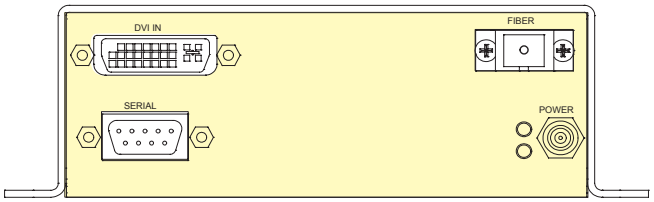

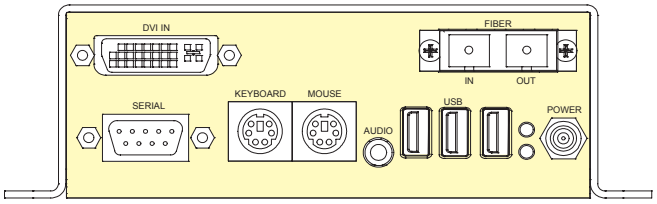

Specifications

Video Input:
Standards: DVI 1.0
Number of Inputs: 1
Connectors: 28-pin DVI
Video Resolution: Up to WUXGA (1920x1200) at 75Hz
Color Resolution: 24 bits

Analog Audio Input (A2, A2KM & A2KM-USB-F2 versions):
Number of Inputs: 2
Type: Balanced analog audio
Connector: 3.5mm female stereo
Impedance High Impedance (> 20kW)
Frequency Response: ±0.1dB (20Hz to 20kHz)
THD: < 0.005% (20Hz to 20kHz)
Channel Phase Diff: < ±1°
SNR: > 85dB
Maximum Input Level: +24dBu
Signal Quantization: 24 bits

USB, Keyboard/Mouse Input/Output (A2KM & A2KM-USB versions):
Standards: USB 1.1
Number: 2 (A2KM), 3 (A2KM-USB)
Connector: 1 PS2 for each keyboard & mouse, 1 USB type B (A2KM-USB only)

Optical Output:
Number of Outputs: 1
Connector: Female SC/PC, ST/PC or FC/PC
Wavelengths: See Ordering Information
Output Power: See Application Configuration Chart

Optical Input (A2KM & A2KM-USB-F2 versions):
Number of Inputs: 1
Connector: Female SC/PC, ST/PC, FC/PC
Wavelength: 1270 to 1610nm
Maximum Power: 0dBm
Optical Sensitivity: See Application Configuration Chart

Electrical:
Voltage: Auto ranging 100-240VAC 12V DC 50/60Hz (adapter included)
Power: 11W

Physical:
Diemensions:
With flanges: 7.81"L x 5.63"W x 1.75"H (199mm L x 143mm W x 45mm H)

Compliance:
Electrical Safety: Power supply UL listed
Complies with CE Low voltage Directive
Laser Safety: Class 1 laser product
Complies with 24 CFR 1040.10 and 1040.11
IEC 60825-1
EMI/RFI: Complies with FCC Part 15, Class A
EU EMC directive

Ordering Information

2407DVIT13 DVI Fiber Transmitter, 1310nm FP
2407DVIT13-A2 DVI + 2 Analog Audio Fiber Transmitter, 1310nm FP
2407DVIT13-A2KM-F2
DVI/KVM + 2 Analog Audio + Bi-di Keyboard and Mouse Fiber Transmitter, dual fiber, 1310nm TX & RX
2407DVIT13-A2KM-USB-F2
DVI/KVM + 2 Analog Audio + Bi-di Keyboard Mouse and USB Fiber Transmitter, dual fiber, 1310nm TX & RX
2407DVIT15-A2KM-W
DVI/KVM + 2 Analog Audio + Bi-di Keyboard Mouse Fiber Transmitter, single fiber, 1550nm TX, RX on 1310nm
2407DVIT15-A2KM-USB-W
DVI/KVM + 2 Analog Audio + Bi-di Keyboard and Mouse and USB Fiber Transmitter, single fiber, 1550nm TX, RX on 1310nm

For CWDM, please refer to the end of the fiber section for ordering information
2407DVITxx DVI Fiber Transmitter, CWDM Laser
2407DVITxx-A2 DVI + 2 Analog Audio Fiber Transmitter, CWDM Laser
2407DVITxx-A2KM-F2
DVI/KVM + 2 Analog Audio + Bi-di Keyboard and Mouse Fiber Transmitter, dual fiber, CWDM Laser
2407DVITxx-A2KM-USB-F2
DVI/KVM + 2 Analog Audio + Bi-di Keyboard Mouse and USB Fiber Transmitter, dual fiber, CWDM Laser

Ordering Options Fiber connector must be specified at time of order
Eg: Model +SC

Connector Suffix
+SC: SC/PC
+ST: ST/PC
+FC: FC/PC

All 2407 models include power supply

2407DVIR

DVI / KVM Miniature Fiber Receiver

The 2407DVIR is a miniature DVI/KVM fiber receiver for high resolution/high quality video signals. This self-contained module accepts one DVI video input up to WUXGA resolution and transmits it over a single fiber. The 2407DVIR is also available with analog audio, keyboard + mouse and USB options.

The companion 2407DVIT DVI/KVM Fiber Transmitter demultiplexes the signals and converts them back to digital DVI. The fiber output is available in an assortment of optical wavelengths, accomodating 1310/1550nm and CWDM transmission schemes.

Features & Benefits

- Supports DVI transport over a single or dual fiber
- VESA video resolutions supported up to WUXGA
- Full 24 bits-per-pixel color resolution
- Ideal for use with high resolution LCD, plasma and projection screens
- Superior digital data transmission
- Rugged small form factor enclosure
- Supports single-mode and multi-mode fiber optic cable
- Optical output wavelengths at 1310nm, 1550nm and up to sixteen CWDM wavelengths (ITU-T G.694.2 compliant)
- Optional 2 channel stereo analog audio
- Optional USB interface
- Optional copper I/O (Please contact factory)

2407DVIR Application Configurations

FIBER TYPE	FIBERS	OPTICAL/LINK BUDGET	TRANSMIT SIDE		RECEIVE SIDE		DESCRIPTION
			ORDERING PRODUCT INFO	TX POWER	ORDERING PRODUCT INFO	RX SENSITIVITY	
Multi-Mode	2	< 300m	2407DVIT13-A2KM-USB-F2	-7dBm	2407DVIR13-A2KM-USB-F2	-19dBm	1310nm on Tx & Rx fibers
Single-Mode	2	12dB/34km	2407DVIT13-A2KM-USB-F2	-7dBm	2407DVIR13-A2KM-USB-F2	-19dBm	1310nm on Tx & Rx fibers
Single-Mode	1	8dB/20km*	2407DVIT15-A2KM-USB-W	-1dBm	2407DVIR13-A2KM-USB-W	-17dBm	1310nm/1550nm WDM bi-directional, one fiber
Single-Mode	1(CWDM)	15.5dB/60km**	2407DVITxx-A2KM-USB-F2	0dBm	2407DVIRyy-A2KM-USB-F2	-19dBm	Different CWDM wavelengths for Tx & Rx, with 8 channel CWDM Mux/Demux**

* With >20dB return loss on fiber interface
** Assumes 8 Ch CWDM Mux/Demux loss of 3.5dB

Tx Power/Rx Sensitivity are nominal values ±1dBm
Fiber loss= 0.35/0.25dB per km @ 1310nm/1550nm

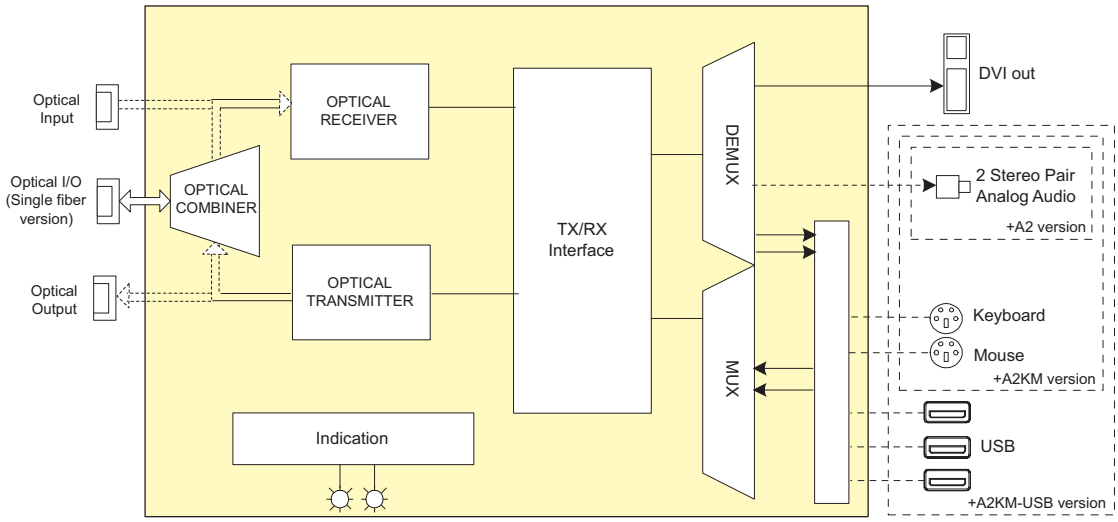

2407DVIR Side Panels

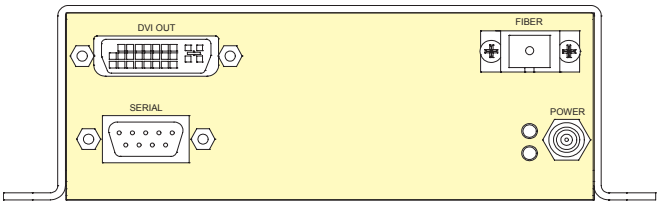

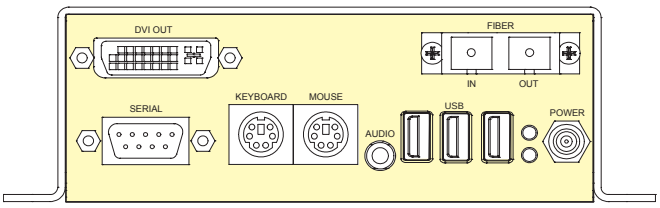

Specifications

Video Input:
Standards: DVI 1.0
Number of Inputs: 1
Connectors: 28-pin DVI
Video Resolution: Up to WUXGA (1920x1200) at 75Hz
Color Resolution: 24 bits

Analog Audio Input (A2, A2KM & A2KM-USB-F2 versions):
Number of Inputs: 2
Type: Balanced analog audio
Connector: 3.5mm female stereo
Impedance High Impedance (> 20kΩ)
Frequency Response: ±0.1dB (20Hz to 20kHz)
THD: < 0.005% (20Hz to 20kHz)
Channel Phase Diff: < ±1°
SNR: > 85dB
Level: -20dB to +3dB
Max Output Level: -24dBu into 10kΩ loads

Keyboard/Mouse, USB Input/Output (A2KM & A2KM-USB versions):
Standards: USB 1.1
Number: 2 (A2KM), 5 (A2KM-USB)
Connector: 1 PS2 for keyboard & mouse, 3 USB Type A (A2KM-USB only)

Optical Output:
Number of Outputs: 1
Connector: Female SC/PC, ST/PC or FC/PC
Wavelengths: See Ordering Information
Output Power: See Application Configuration Chart

Optical Input (A2KM & A2KM-USB-F2 versions):
Number of Inputs: 1
Connector: Female SC/PC, ST/PC, FC/PC
Wavelength: 1270 to 1610nm
Maximum Power: 0dBm
Optical Sensitivity: See Application Configuration Chart

Physical:
Diemensions:
With flanges: 7.81"L x 5.63"W x 1.75"H (199mm L x 143mm W x 45mm H)

Electrical:
Voltage: Auto ranging 100-240VAC 12V DC 50/60Hz (adapter included)
Power: 11W

Compliance:
Electrical Safety: Power supply UL listed
Complies with CE Low voltage Directive
Laser Safety: Class 1 laser product
Complies with 24 CFR 1040.10 and 1040.11
IEC 60825-1
EMI/RFI: Complies with FCC Part 15, Class A
EU EMC directive

Ordering Information

2407DVIR DVI Fiber Receiver
2407DVIR-A2 DVI + 2 Analog Audio Fiber Receiver
2407DVIR13-A2KM-F2
DVI/KVM + 2 Analog Audio + Bi-di Keyboard and Mouse Fiber Receiver, dual fiber, 1310nm TX & RX
2407DVIR13-A2KM-USB-F2
DVI/KVM + 2 Analog Audio + Bi-di Keyboard Mouse and USB Fiber Receiver, dual fiber, 1310nm TX & RX
2407DVIR15-A2KM-W
DVI/KVM + 2 Analog Audio + Bi-di Keyboard Mouse Fiber Receiver, single fiber, 1550nm TX, RX on 1310nm
2407DVIR15-A2KM-USB-W
DVI/KVM + 2 Analog Audio + Bi-di Keyboard and Mouse and USB Fiber Receiver, single fiber, 1550nm TX, RX on 1310nm

For CWDM, please refer to the end of the fiber section for ordering information
2407DVIRxx-A2KM-F2
DVI/KVM + 2 Analog Audio + Bi-di Keyboard and Mouse Fiber Receiver, dual fiber, CWDM Laser
2407DVIRxx-A2KM-USB-F2
DVI/KVM + 2 Analog Audio + Bi-di Keyboard Mouse and USB Fiber Receiver, dual fiber, CWDM Laser

Ordering Options Fiber connector must be specified at time of order
Eg: Model +SC

Connector Suffix
+SC: SC/PC
+ST: ST/PC
+FC: FC/PC

All 2407 models include power supply

2405LTA, 2407LTA

L-Band Standalone/Weatherproof Fiber Transmitter

The 2405LTA & 2407LTA are fiber optic transmitters for RF signals in the satellite L-Band frequency range. They accept a single RF input on coaxial cable and provide a single output for optical transmission. Packaged in compact, standalone, enclosures, the 2405LTA & 2407LTA are ideal for mounting on or near the satellite dish antenna structure. The -WP versions feature IP65 dust and water protection allowing outdoor mounting without a secondary encolsure. An RF monitor output provides a convenient means of obtaining peak satellite signal strength.

Gain may be adjusted manually or managed automatically via AGC. On the 2407 version, incoming RF signal strength, status of connected 2400PSU-4 power supply and other data are relayed over the fiber output for monitoring through SNMP/VistaLINK® by capable Evertz companion receivers. The 2405LTA & 2407LTA also provide a DC pass through mode for LNB power and comprehensive indicators that provide status information on the input DC power and RF signal strength as well as LNB voltage level.

Features & Benefits

- Directly mount to antenna structure or other outdoor locations
- WP versions are Weatherproof - do not require secondary enclosures
- Compatible with all Evertz L-Band RF fiber optic receivers
- Extended frequency response of 950 to 2150MHz
- Protocol independent design - transports all modulation formats
- DC input pass through mode provides DC LNB power super imposed on RF input with current limit and short circuit protection
- 22kHz tone on/off for LNB local oscillator control
- RF monitor output for signal peaking and signal distribution
- Manually adjustable gain
- AGC mode
- Tri-color LED status indicator for Link RF drive strength, LNB voltage output level and DC input voltage level

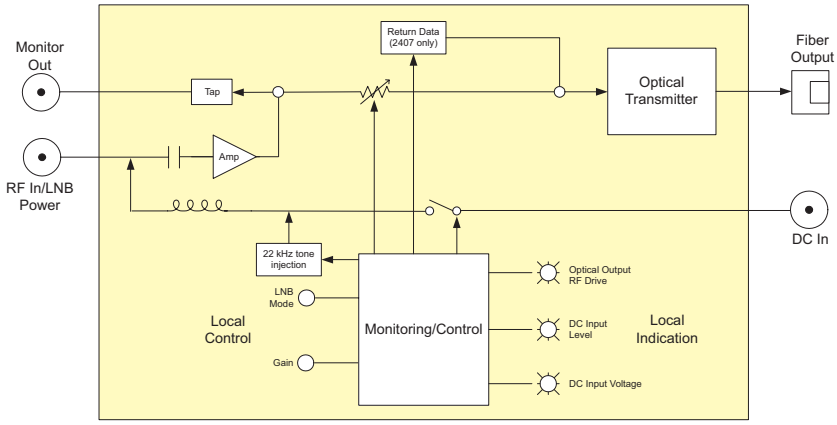

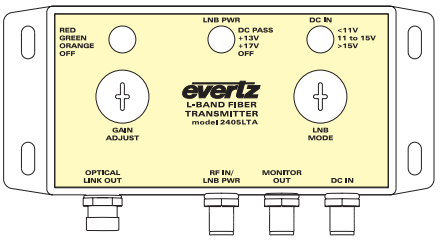

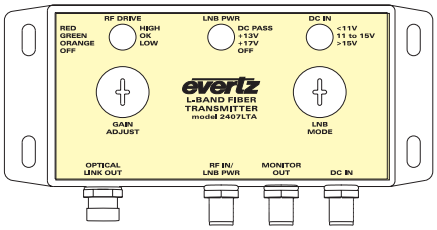

Specifications

RF Input:

Number of Intputs:	1
Connector:	F-Type
Input Impedance:	75Ω
Return Loss:	> 15dB
Frequency Range:	950MHz-2150MHz
Input Power Range:	-20dBm to -60dBm
AGC Hold Range:	30dB (2407LTA only)
LNB Power:	Will pass input DC up to 350mA
LO Control:	22 kHz on/off

RF Monitor Output:

Number of Outputs:	1
Connector:	F-Type
Output Impedance:	75Ω
Return Loss:	> 13dB
Frequency Range:	950MHz-2150MHz
Output Power Range:	
RF Monitor:	± 3dB of input signal

Optical Output:

Number of Outputs:	1
Connector:	Female FC/APC
Operating Wavelength:	
Standard:	1310nm
1550nm:	1550nm
CWDM(2407LTA only):	1270-1610nm

RF System Performance 2407LTA+7708LR pair:

Frequency Range:	950MHz-2150MHz
Flatness:	±1.5dB @ 950MHz-2150MHz ±0.5dB @ any 36MHz BW
Output Signal Level:	(Input signal) + (TX gain) + (RX gain) - (2xOptical Loss)
OIP3:	+10dBm (-40dBm i/p, TX: 20dB, RX: 30dB)
Intermodulation Products:	-55dBc @ (RF input -20dBm, TX/RX gain to 0dB)

Electrical:

Voltage:	+9V DC to +23V DC (>11V DC required when powering an LNB)
Power:	3W max excluding LNB Power

Physical:

Dimensions With Flanges:
5.4"L x 2.4"W x 1.2"H
(138mm L x 61mm W x 31mm H)

Compliance:

Laser safety:	Class 1 laser product Complies with 24 CFR 1040.10 and 1040.11 IEC 60825-1
EMI/RFI:	Complies with FCC Part 15, Class A EU EMC directive

Environmental:

Temperature:	-40 to +60°C
Dust & Water Protection:	IP65 (-WP version only)

Ordering Information

2405LTA13	L-Band Standalone Fiber Transmitter, 1310nm FP laser
2405LTA15	L-Band Standalone Fiber Transmitter, 1550nm DFB laser
2407LTA13	L-Band Standalone Fiber Transmitter with AGC, 1310nm FP laser
2407LTA15	L-Band Standalone Fiber Transmitter with AGC, 1550nm DFB laser
2405LTA13-WP	L-Band Standalone/Weatherproof Fiber Transmitter, 1310nm FP laser
2405LTA15-WP	L-Band Standalone/Weatherproof Fiber Transmitter, 1550nm DFB laser
2407LTA13-WP	L-Band Standalone/Weatherproof Fiber Transmitter with AGC, 1310nm FP laser
2407LTA15-WP	L-Band Standalone/Weatherproof Fiber Transmitter with AGC, 1550nm DFB laser

For CWDM, please refer to the end of the fiber section for ordering information

2407LTAxx	L-Band Standalone Fiber Transmitter with AGC, CWDM DFB laser
2407LTAxx-WP	L-Band Standalone/Weatherproof Fiber Transmitter with AGC, CWDM DFB laser

Ordering Options:

+PS	DC external power supply, 100-240V AC auto-ranging input, indoor mounting with F-Type connector

Note: For weatherproof power supply see 2400PSU-4 catalog page

2400PSUA-4

Outdoor, quad output power supply for 240xLT/LR series

The 2400PSUA-4 is used to supply power to up to four 2405LTA or 2407LTA RF fiber optic transmitters including DC power for upstream LNBs. It contains dual, redundant DC power supplies and provides four diode-isolated outputs on F-Type connectors.

Packaged in an environmentally protected enclosure suitable for outdoor locations, the 2400PSUA-4 can be conveniently mounted on or near the antenna structure.

Features & Benefits

- Provides diode-isolated, redundant DC power for up to four 2405/2407LTA modules and upstream LNBs
- Active fuses for protection of each DC output
- Weatherproof - does not require a secondary enclosure for outdoor mounting
- LED indicators display the status of each power supply and DC output
- PSU status signal output for remote monitoring via connected 2407LTA

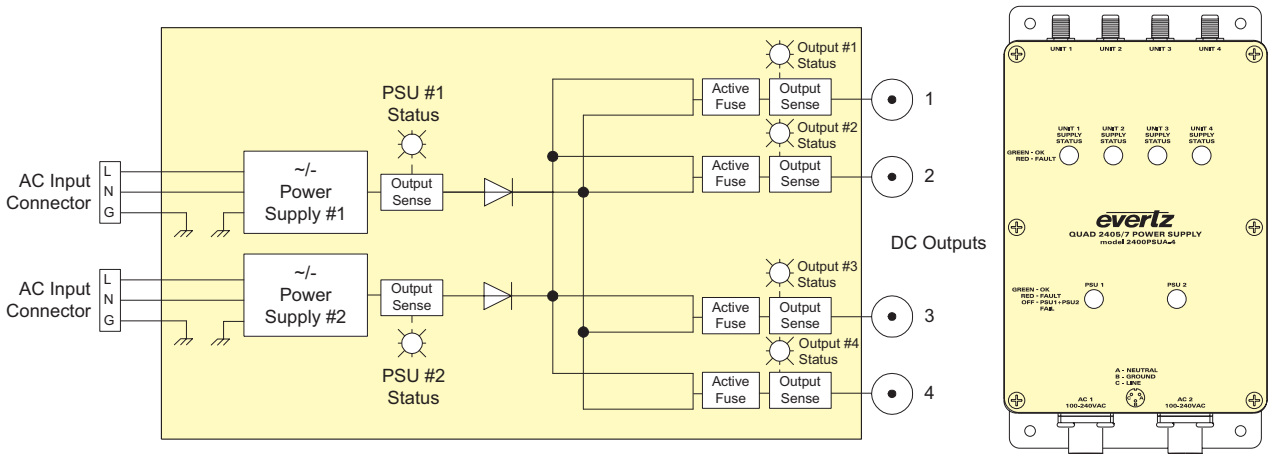

Specifications

Power Input

Number of Inputs:	2
Connector:	Male, weatherproof, mating connectors included
Voltage:	Auto ranging, 100-264 VAC
Frequency:	47-63Hz
Power:	74W max per input

Power Output:

Number of Outputs:	4, diode isolated
Connector:	F-Type
Voltage:	18 ±1 VDC per output
Current:	900mA max per output

Physical:

Dimensions (with flanges):
8.0"L x 4.8"W x 2.2"H
(203mm L x 122mm W x 56mm H)

Environmental:

Temperature: -20 to +70°C

Dust & Water Protection:
IP65

Ordering Information

2400PSUA-4	Outdoor, quad output power supply for 2407LTA series

Ordering Options:

+LC	Dual, NEMA5-I5P linecords with mating connectors installed, indoor use only

2407RGBT

RGBHV / DVI / KVM Miniature Fiber Transmitter

The 2407RGBT is a miniature RGBHV/DVI/KVM fiber transmitter for high resolution/high quality video signals. This self-contained module accepts one analog RGBHV or digital DVI video input up to WUXGA resolution and transmits them over a single or dual fiber. The 2407RGBT is also available with analog audio, keyboard + mouse and USB options.

The companion 2407RGBR RGBHV/DVI/KVM Fiber Receiver demultiplexes the signals and converts them back to analog RGBHV and digital DVI. The fiber output is available in an assortment of optical wavelengths, accommodating 1310/1550nm and CWDM.

Features & Benefits

- Supports DVI or RGBHV transport over a single or dual fiber
- Both RGBHV and DVI outputs available simultaneously on companion 2407RGBR Receiver
- VESA video resolutions supported up to WUXGA
- Full 24 bits-per-pixel color resolution
- Ideal for use with high resolution LCD, plasma, and projection screens
- Superior digital data transmission
- Rugged, small form factor enclosure
- Supports single-mode and multi-mode fiber optic cable
- Optical output wavelengths at 1310nm, 1550nm and up to sixteen CWDM wavelengths (ITU-T G.694.2 compliant)
- Optional 2 channel stereo analog audio
- Optional keyboard and mouse
- Optional USB interface
- Optional copper I/O (Please contact factory)

2407RGBT Application Configurations

FIBER TYPE	FIBERS	OPTICAL/LINK BUDGET	TRANSMIT SIDE		RECEIVE SIDE		DESCRIPTION
			ORDERING PRODUCT INFO	TX POWER	ORDERING PRODUCT INFO	RX SENSITIVITY	
Multi-Mode	2	< 300m	2407RGBT13-A2KM-USB-F2	-7dBm	2407RGBR13-A2KM-USB-F2	-19dBm	1310nm on Tx & Rx fibers
Single-Mode	2	12dB/34km	2407RGBT13-A2KM-USB-F2	-7dBm	2407RGBR13-A2KM-USB-F2	-19dBm	1310nm on Tx & Rx fibers
Single-Mode	1	8dB/20km*	2407RGBT15-A2KM-W	-1dBm	2407RGBR13-A2KM-W	-17dBm	1310nm/1550nm WDM bi-directional, one fiber
Single-Mode	1(CWDM)	15.5dB/60km**	2407RGBTxx-A2KM-USB-F2	0dBm	2407RGBRyy-A2KM-USB-F2	-19dBm	Different CWDM wavelengths for Tx & Rx, with 8 channel CWDMux/Demux**

* With >20dB return loss on fiber interface
**Assumes 8 Ch CWDM Mux/Demux loss of 3.5dB

Tx Power/Rx Sensitivity are nominal values ±1dBm
Fiber loss= 0.35/0.25dB per km @ 1310nm/1550nm

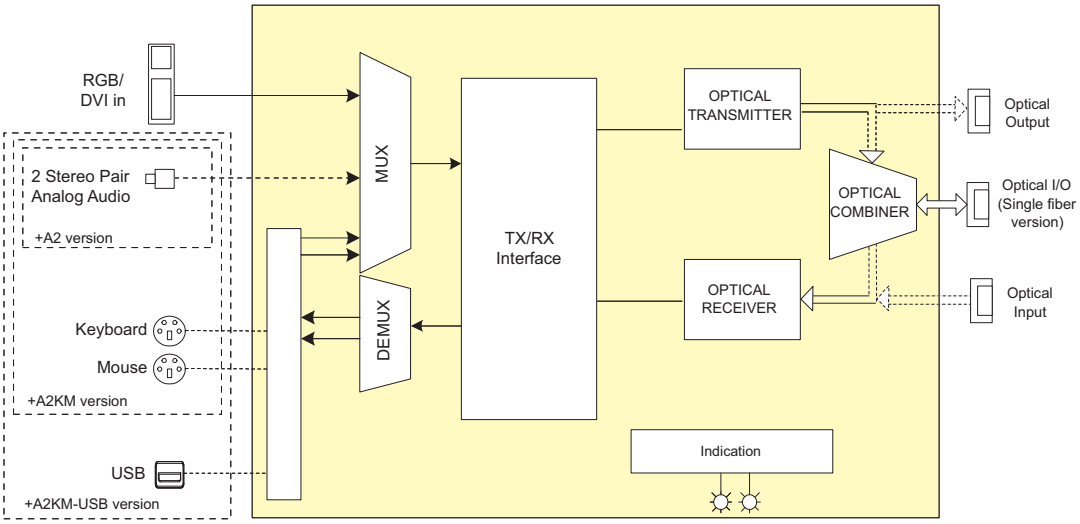

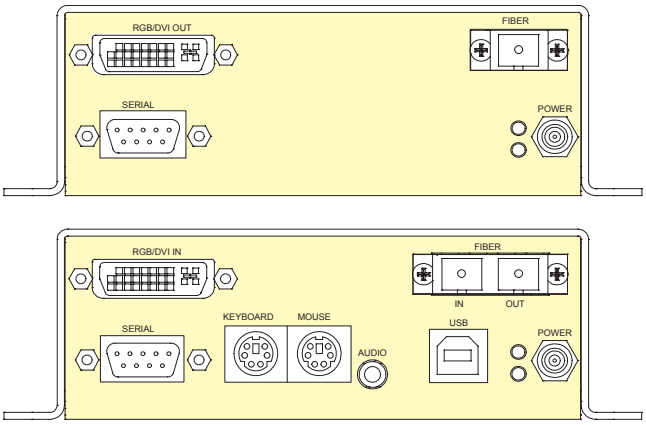

Specifications

Video Input:

Standards:	DVI 1.0, VESA
Number of Inputs:	1
Connectors:	28-pin DVI with Analog
Video Resolution:	Up to WUXGA (1920x1200) at 75Hz
Video Bandwidth:	500MHz
Color Resolution:	24 bits
Analog Output Level:	1V p-p (maximum)
Analog Output Impedance:	75Ω
Signal/Noise Ratio:	> 55dB

Analog Audio Input (A2, A2KM & A2KM-USB versions):

Number of Inputs:	2
Type:	Balanced analog audio
Connector:	3.5mm female stereo
Impedance	High Impedance (> 20kΩ)
Frequency Response:	±0.1dB (20Hz to 20kHz)
THD:	< 0.005% (20Hz to 20kHz)
Channel Phase Diff:	< ±1°
SNR:	> 85dB
Maximum Input Level:	+24dBu
Signal Quantization:	24 bits

Keyboard/Mouse, USB Input/Output (A2KM & A2KM-USB versions):

Standards:	USB 1.1
Number:	2 (A2KM versions), 3 (USB versions)
Connector:	2 PS2 for keyboard & mouse 1 USB Type B

Optical Output

Number of Outputs:	1
Connector:	Female SC/PC, ST/PC or FC/PC
Wavelengths:	See Ordering Information
Output Power:	See Application Configuration Chart

Optical Inputs/Outputs (A2KM & A2KM-USB-F2 versions):

Number of Inputs:	1
Connector:	Female SC/PC, ST/PC, FC/PC
Wavelength:	1270 to 1610nm
Maximum Power:	0dBm
Optical Sensitivity:	See Application Configuration Chart

Electrical:

Voltage:	Auto ranging 100-240VAC 12V DC 50/60Hz (adapter included)
Power:	11W

Physical:

Dimensions:	
With flanges:	7.81"L x 5.63"W x 1.75"H (199mm L x 143mm W x 45mm H)

Compliance:

Electrical Safety:	Power supply UL listed Complies with CE Low voltage Directive
Laser Safety:	Class 1 laser product Complies with 24 CFR 1040.10 and 1040.11 IEC 60825-1
EMI/RFI:	Complies with FCC Part 15, Class A EU EMC directive

Ordering Information

2407RGBT13	RGBHV/DVI Fiber Transmitter, 1310nm FP
2407RGBT13-A2	RGBHV/DVI + 2 Analog Audio Fiber Transmitter, 1310nm FP laser
2407RGBT13-A2KM-F2	RGBHV/DVI/KVM + 2 Analog Audio + Bi-di Keyboard and Mouse Fiber Transmitter, dual fiber, 1310nm TX & RX
2407RGBT13-A2KM-USB-F2	RGBHV/DVI/KVM + 2 Analog Audio + Bi-di Keyboard and Mouse and USB Fiber Transmitter, dual fiber, 1310nm TX & RX
2407RGBT15-A2KM-W	RGBHV/DVI/KVM + 2 Analog Audio + Bi-di Keyboard and Mouse Fiber Transmitter, single fiber, 1550nm TX, RX on 1310nm
2407RGBT15-A2KM-USB-W	RGBHV/DVI/KVM + 2 Analog Audio + Bi-di Keyboard and Mouse and USB Fiber Transmitter, single fiber, 1550nm TX, RX on 1310nm

For CWDM, please refer to the end of the fiber section for ordering information

2407RGBTxx	RGBHV/DVI Fiber Transmitter, CWDM DFB laser
2407RGBTxx-A2	RGBHV/DVI + 2 Analog Audio Fiber Transmitter, CWDM DFB laser
2407RGBTxx-A2KM-F2	RGBHV/DVI/KVM + 2 Analog Audio + Bi-di Keyboard and Mouse Fiber Transmitter, dual fiber, CWDM DFB laser
2407RGBTxx-A2KM-USB-F2	RGBHV/DVI/KVM + 2 Analog Audio + Bi-di Keyboard and Mouse and USB Fiber Transmitter, dual fiber, CWDM DFB laser

Ordering Options Fiber Connector must be specified at time of order
Eg: Model +SC

Connector Suffix

+SC:	SC/PC
+ST:	ST/PC
+FC:	FC/PC

All 2407 models include power supply

2407RGBR

RGBHV / DVI / KVM Miniature Fiber Receiver

The 2407RGBR is a miniature RGBHV/DVI/KVM receiver for high resolution/high quality video signals. Available in fiber optic versions, this single card module accepts an input from the companion 2407RGBT RGHV/DVI/KVM Transmitter and outputs both analog RGBHV and digital DVI video.

It is also available with analog audio, keyboard + mouse and USB options. The fiber output is available in an assortment of optical wavelengths, accommodating 1310/1550nm and CWDM.

Features & Benefits

- Supports DVI or RGBHV transport over a single or dual fiber
- Both RGBHV and DVI outputs available simultaneously
- VESA video resolutions supported up to WUXGA
- Full 24 bits-per-pixel color resolution
- Ideal for use with high resolution LCD, plasma, and projection screens
- Superior digital data transmission
- Rugged, small form factor enclosure
- Supports single-mode and multi-mode fiber optic cable
- Optical output wavelengths at 1310nm, 1550nm and up to sixteen CWDM wavelengths (ITU-T G.694.2 compliant)
- Optional 2 channel stereo analog audio
- Optional keyboard and mouse
- Optional USB interface
- Optional copper I/O (Please contact factory)

2407RGBR Application Configurations

FIBER TYPE	FIBERS	OPTICAL/LINK BUDGET	TRANSMIT SIDE		RECEIVE SIDE		DESCRIPTION
			ORDERING PRODUCT INFO	TX POWER	ORDERING PRODUCT INFO	RX SENSITIVITY	
Multi-Mode	2	< 300m	2407RGBT13-A2KM-USB-F2	-7dBm	2407RGBR13-A2KM-USB-F2	-19dBm	1310nm on Tx & Rx fibers
Single-Mode	2	12dB/34km	2407RGBT13-A2KM-USB-F2	-7dBm	2407RGBR13-A2KM-USB-F2	-19dBm	1310nm on Tx & Rx fibers
Single-Mode	1	8dB/20km*	2407RGBT15-A2KM-W	-1dBm	2407RGBR13-A2KM-W	-17dBm	1310nm/1550nm WDM bi-directional, one fiber
Single-Mode	1(CWDM)	15.5dB/60km**	2407RGBTxx-A2KM-USB-F2	0dBm	2407RGBRyy-A2KM-USB-F2	-19dBm	Different CWDM wavelengths for Tx & Rx, with 8 channel CWDMux/Demux**

* With >20dB return loss on fiber interface
** Assumes 8 Ch CWDM Mux/Demux loss of 3.5dB

Tx Power/Rx Sensitivity are nominal values ±1dBm
Fiber loss= 0.35/0.25dB per km @ 1310nm/1550nm

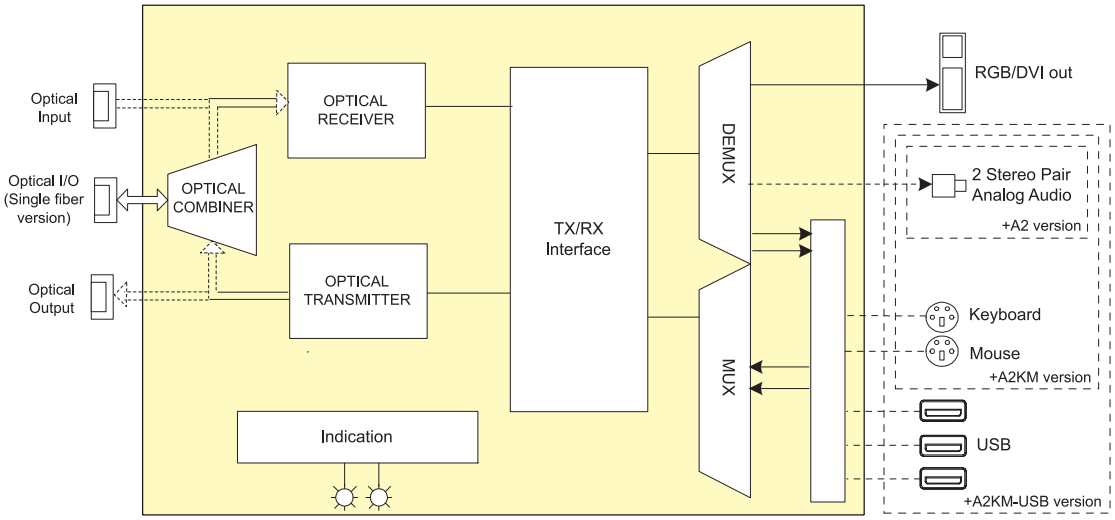

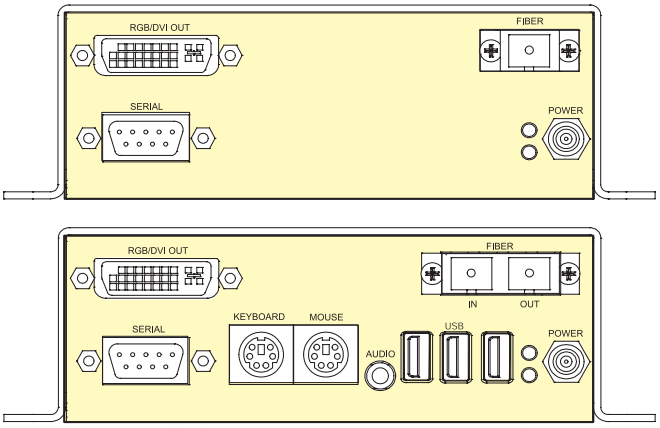

Specifications

Video Ouput:
Standards: DVI 1.0, VESA
Number of Inputs: 1
Connectors: 28-pin DVI with Analog
Video Resolution: Up to WUXGA (1920x1200) at 75Hz
Video Bandwidth: 500MHz
Color Resolution: 24 bits
Analog Output Level: 1V p-p (maximum)
Analog Output:
Impedance: 75Ω
Signal/Noise Ratio: > 55dB

Analog Audio Output (A2, A2KM & A2KM-USB versions):
Number of Inputs: 2
Type: Balanced analog audio
Connector: 3.5mm female stereo
Impedance High Impedance (> 20kΩ)
Frequency Response:
±0.1dB (20Hz to 20kHz)
THD: < 0.005% (20Hz to 20kHz)
Channel Phase Diff: < ±1°
SNR: > 85dB
Level: +20dBu to +3dB
Maximim Output Level:
+24dBu into 10kΩ loads

Keyboard/Mouse, USB Input/Output (A2KM & A2KM-USB versions):
Standards: USB 1.1
Number: 2 (A2KM versions), 5 (USB versions)
Connector: 2 PS2 for keyboard & mouse
3 USB Type A

Optical Input:
Number of Inputs: 1
Connector: Female SC/PC, ST/PC or FC/PC
Operating Wavelength:
1270nm - 1610nm
Max Input Power: 0 dBm
Optical Sensitivity: See Application Configuration chart

Optical Output (A2KM & A2KM-USB-F2 versions):
Number of Outputs: 1
Connector: Female SC/PC, ST/PC, FC/PC
Wavelengths: See Ordering Information
Power: See Application Configuration Chart

Electrical:
Voltage: Auto ranging 100-240VAC 12V DC
50/60Hz (adapter included)
Power: 11W

Physical:
Dimensions:
With flanges: 7.81"L x 5.63"W x 1.75"H
(199mm L x 143mm W x 45mm H)

Compliance:
Electrical Safety: Power supply UL listed
Complies with CE Low voltage Directive
Laser Safety: Class 1 laser product
Complies with 24 CFR 1040.10 and 1040.11
IEC 60825-1
EMI/RFI: Complies with FCC Part 15, Class A
EU EMC directive

Ordering Information

2407RGBR RGBHV/DVI Fiber Receiver
2407RGBR-A2 RGBHV/DVI + 2 Analog Audio Fiber Receiver
2407RGBR13-A2KM-F2
RGBHV/DVI/KVM + 2 Analog Audio + Bi-di Keyboard and Mouse Fiber Receiver, dual fiber, 1310nm TX & RX
2407RGBR13-A2KM-USB-F2
RGBHV/DVI/KVM + 2 Analog Audio + Bi-di Keyboard and Mouse + USB, Fiber Receiver, dual fiber, 1310nmTX & RX
2407RGBR13M-A2KM-W
RGBHV/DVI/KVM + 2 Analog Audio + Bi-di Keyboard and Mouse Fiber Receiver, single fiber, 1310nm RX, TX on 1550nm
2407RGBR13M-A2KM-USB-W
RGBHV/DVI/KVM + 2 Analog Audio + Bi-di Keyboard and Mouse + USB Fiber Receiver, single fiber, 1310nm RX, TX on 1550nm

For CWDM, please refer to the end of the fiber section for ordering information
2407RGBRxx-A2KM-F2
RGBHV/DVI/KVM + 2 Analog Audio + Bi-di Keyboard and Mouse Fiber Transmitter, dual fiber, CWDM DFB laser
2407RGBRxx-A2KM-USB-F2
RGBHV/DVI/KVM + 2 Analog Audio + Bi-di Keyboard and Mouse and USB Fiber Transmitter, dual fiber, CWDM DFB laser

Ordering Options Fiber Connector must be specified at time of order
Eg: Model +SC

Connector Suffix
+SC SC/PC
+ST ST/PC
+FC FC/PC

All 2407 models include power supply

2430DAC-HD

HD Miniature Digital to Analog Converter

The 2430DAC-HD is a professional quality digital to analog converter for HDTV. It supports all signal standards specified in SMPTE 240M, SMPTE 274M and SMPTE 296M.

DIP switch control allows the user to select between YPrPb, RGB or VGA style analog outputs with a variety of sync output options. User-controlled 4:3 alignment markers also allow for convenient framing of the video signal. With the optionally supplied VGA to BNC breakout cable the 2430DAC-HD can easily interface to either standard broadcast monitors or VGA computer monitors.

Features & Benefits

- Support for all SMPTE 240M, 274M and 296M video formats
- 4:3 alignment markers
- Full 10 Bit Broadcast quality
- 4:4:4 interpolated component output
- DIP switch selectable YPrPb, RGB or VGA outputs with bi-level or tri-level sync
- 15-pin VGA connector for use with VGA computer monitors
- Front panel LEDs indicate video presence, module faults

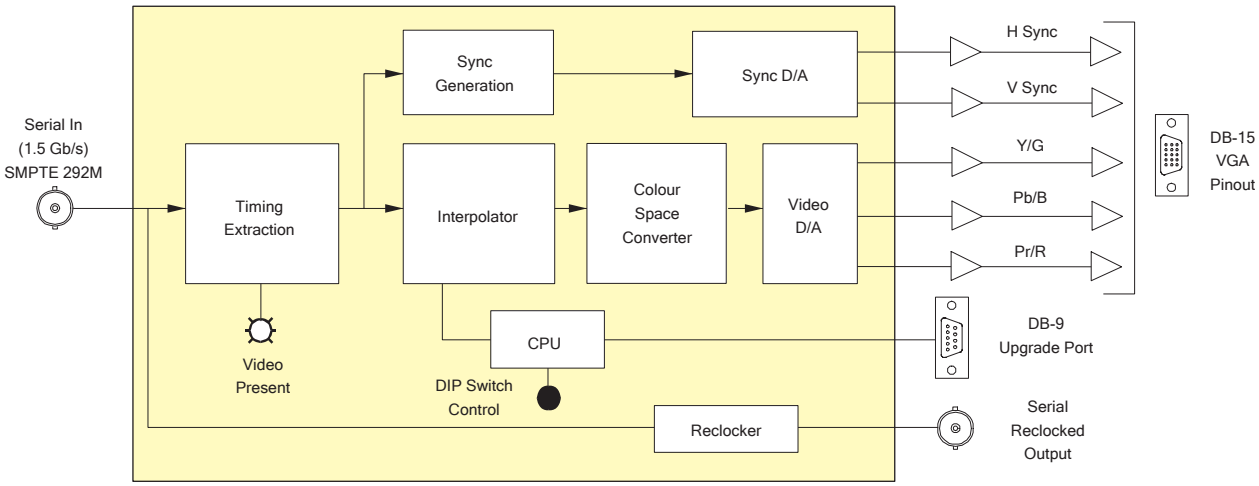

Specifications

Serial Video Input

Standard:	SMPTE 292M (1.485Gb/s) SMPTE 240M (1035i) SMPTE 274M (1080i, 1080psF, 1080p (except 1080p/60 & 1080p/59.94) SMPTE 296M (720p)
Connector:	1 BNC per IEC 60169-8 Amendment 2
Equalization:	Automatic 125m @ 1.5Gb/s with Belden 1694A (or equivalent)

Serial Video Output Reclocked

Standard:	Same as input
Number of Outputs:	1
Connector:	BNC per IEC 60169-8 Amendment 2
Signal Level:	800mV nominal
DC Offset:	0V ±0.5V
Rise and Fall Time:	200 ps nominal
Overshoot:	< 10% of amplitude
Wide Band Jitter:	< 0.2 UI

Analog Video Outputs

Standard:	SMPTE 240M, 274M or 296M - same as input
Connector:	15-pin high density female D type
Signal Level:	
Video:	1V p-p nominal YPrPb/RGB or 0.7V p-p nominal VGA
Sync:	300mV or 4V
Impedance:	75Ω
DC Offset:	0V ±0.1V
Return Loss:	> 45dB up to 30MHz

Upgrade Port

Standard:	RS-232
Connector:	Female DB-9
Baud Rate:	57600
Format:	8-bits, no parity, 1 stop bits

Electrical

Voltage:	Auto ranging 100-240VAC 12V DC 50/60Hz (adapter included)
Power:	6W
Safety:	Complies with EU safety directive
EMI/RFI:	Complies with FCC Part 15 Class A EU EMC Directive

Physical

Dimensions:	6" L x 3.5" W x 1" H (152mm L x 89mm W x 25mm H)
With Mounting Flanges:	6" L x 4" W x 1" H (152mm L x 114mm W x 25mm H)
Weight:	0.5lbs (0.28kg)

Ordering Information

2430DAC-HD	HD Miniautre D to A: YPrPb/RGB/VGA via High Density DB-15 (with power supply)

Accessories

WPVGABNC5	VGA to BNC - 6' Monitor Adapter Cable

Note: *Enclosure with side mount flanges ships standard*

Ordering Options
Case Option Suffix

+NF	Enclosure without mounting flanges

The 2430GDAC GLink D to A Converter provides a simple extension to Evertz multi-display systems by converting a GLink video signal over coaxial or fiber optic cable into a digital DVI signal and analog RGB signal that can be displayed on a computer monitor or flat panel screen, thereby eliminating the 5m distance limit of DVI signals. The converter features one GLink fiber optic input, one GLink coaxial input, one reclocked GLink coaxial output, and one DVI-I video output. The 2430GDAC has been designed for use with any Evertz module featuring a GLink output (for example, the MVP™ 3000MVP-PPMX16-4G and 7767VIP4-HSN-G modules).

The 2430GDAC-WARP features the same I/O specifications as the standard 2430GDAC but also provides the added capability of "warping" or flipping the output display from landscape mode (16:9) to portrait mode (9:16). The 2430GDAC-WARP rotates the output display 90° counter clockwise. This is ideal for space limited applications.

Features & Benefits

- Display resolution capability up to HD (1920X1080) at 60Hz or 50Hz refresh rate
- DVI-I digital and analog RGB video output
- Autodetection of display resolution with manual override.
- One reclocked GLink coaxial output for connection to a second 2430GDAC or other GLink-compatible products
- Standard landscape display (2430GDAC) or portrait display support (2430GDAC-WARP)
- Autodetection of GLink signal loss
- Operation with single-mode or multi-mode fiber optic cable
- SC/PC, ST/PC, or FC/PC fiber connector options
- Low power +12VDC operation

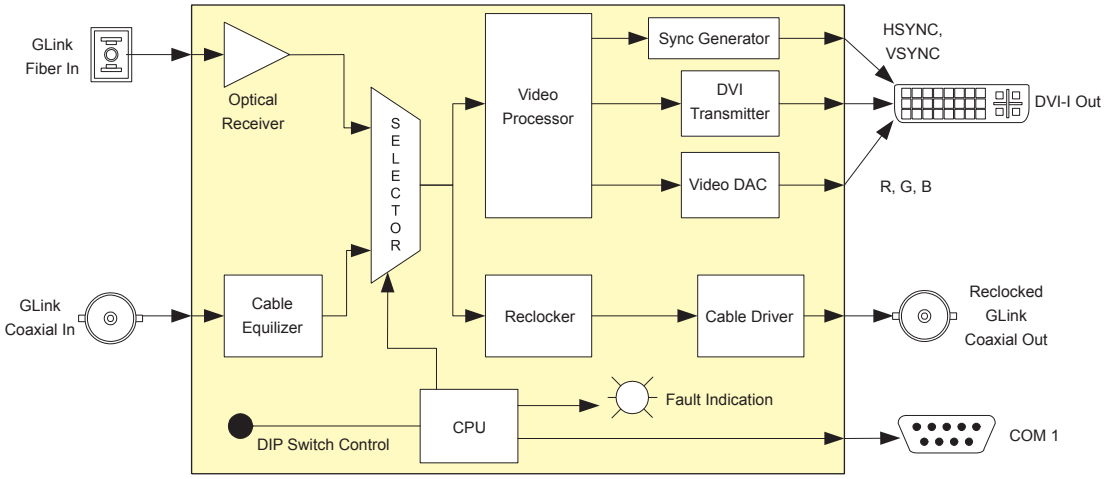

Specifications

Coaxial GLink Input:
Connector: BNC per IEC 60169-8 Amendment 2
Equalization: Automatic up to 10m

Fiber GLink Input:
Connector: SC/PC, ST/PC, or FC/PC female housing
Max. Input Power: -3dBm
Wavelength: 1310 nm to 1610nm
Optical Sensitivity: -25dBm
Fiber Size: 62mm core/125mm overall

Re-clocked Coaxial GLink Output:
Connector: BNC per IEC 60169-8 Amendment 2
Signal Level: 750mV minimum

Video Output:
Connector: DVI-I (digital + analog)
Output Resolution: Up to HD (1920x1080) @ 60Hz or 50Hz maximum

DVI Digital Video Output:
Voltage Swing: 400mV minimum
Output Clock Jitter: 150ps maximum
Differential Skew: 50ps maximum

RGB Analog Video Output:
Signal Level:
Video: 1V p-p nominal RGB
Sync: 4V
Impedance: 75Ω
DC Offset: 0V ±0.5V

Electrical:
Voltage: Auto ranging 100-240VAC 12VDC 10W (power adapter included)
Safety: Power adapter UL listed
Complies with EU safety directive
EMI/RFI: Complies with FCC Part 15 Class A
EU EMC Directive

Physical:
Dimensions: 7.2" L x 4.3" W x 1.0" H (166mm L x 110mm W x 26mm H)
With mounting flanges:
7.2" L x 5.3" W x 1.0" H (166mm L x 136mm W x 26mm H)
Weight: 0.85lbs (0.38kg)

Ordering Information

2430GDAC: GLink to DVI converter
2430GDAC-WARP: GLink to DVI converter with WARP (provides landscape to portrait display orientation conversion support)

Note: *Enclosure with side mount flanges ships standard*

Ordering Options Fiber Connector must be specified at time of order
Eg: Model +SC

Connector Suffix
+SC SC/PC
+ST ST/PC
+FC FC/PC

Case Option Suffix
+NF Enclosure without mounting flanges

2410MD-HSN

HD Miniature Monitoring Downconverter

The 2410MD-HSN Monitoring Downconverter provides an inexpensive method of confidence monitoring your 1.5Gb/s HD signals on standard definition monitors. This High Definition Downconverter is ideal to use with your existing standard resolution monitors whether they have Composite Analog or Serial Digital inputs. The 2410MD-HSN accepts 1080i /1080psF and 720p and provides a fixed output frame rate (selectable to 50 or 60Hz) regardless of the input 720/1080 rate. Pedestal is selectable on/off when output is NTSC.

In segmented frame mode, the 2410MD-HSN down converts the 1080p/24sF input video to 525i/60 with a 3:2 pulldown or 625i/50 with a 24:25 pulldown. The 2410MD-HSN repeats fields to create the 3:2 or 24:25 pulldown of the picture content with a random pulldown cadence on the downconverted output.

Features & Benefits

Indicator LED
- Signal presence
- Module Status

Down-conversion Format
- Letter Box
- Side Crop
- 4x3 Squeeze
- On-screen markers show 4:3 aspect ratio and safe area

Input
- Serial digital 1.5Gb/s HD
- SMPTE 292M Standards: 1080i/60, 1080i/59.94, 1080i/50, 720p60 & 720p/59.94, 1080p/24sF, 1080i/23.98sF & 1080p/25sF

Output
- 2 HD 1.5Gb/s reclocked outputs
- 2 NTSC down converted outputs
- 1 SD down converted output

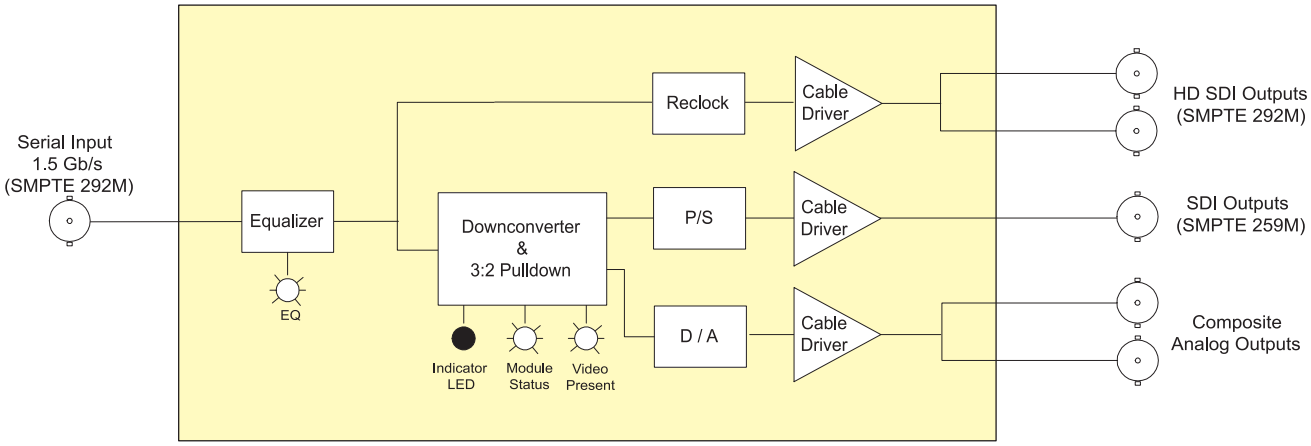

Specifications

Serial Video Input

Standard:	SMPTE 292M, 1080i/60, 1080i/59.94, 1080i/50, 1080p/24sF, 1080p/23.98sF, 1080/25sF, 720p60 & 720p/59.94,
Connector:	1 BNC per IEC 60169-8 Amendment 2
Impedance:	75Ω
Equalization:	Automatic 75m @ 1.5Gb/s with Belden 1694A (or equivalent)

HD Reclocked Video Output

Standard:	Same as input
Connectors:	2 BNC per IEC 60169-8 Amendment 2
Signal Level:	800mV nominal
DC Offset:	0V ±0.5V
Rise and Fall Time:	200ps nominal
Overshoot:	< 10% of amplitude
Wide Band Jitter:	< 0.2 UI

SD Serial Digital Video Output

Standard:	Serial component 270Mb/s (SMPTE 259M-C) 525i/59.94 or 625i/50 Dip Switch selectable
Connectors:	1 BNC per IEC 60169-8 Amendment 2
Signal Level:	800mV nominal
DC Offset:	0V ±0.5V
Rise and Fall Time:	740ps nominal
Overshoot:	<10% of amplitude
Return Loss:	> 15dB
Wide Band Jitter:	< 0.2 UI

Analog Video Output

Standard:	Analog composite NTSC or Analog composite PAL Dip Switch selectable
Connectors:	2 BNC per IEC 60169-8 Amendment 2
Signal Level:	1V p-p nominal, internally adjustable
DC Offset:	0V ±0.1V
Return Loss:	> 45dB up to 6MHz
Impedance:	75Ω

Electrical

Voltage:	Auto ranging 100-240VAC 12VDC 10W (power adapter included)
Safety:	Power adapter UL listed Complies with EU safety directive
EMI/RFI:	Complies with FCC Part 15 Class A EU EMC Directive

Physical

Dimensions:	6" L x4" W x 1" H (152mm L x 115mm W x 25mm H)
Weight:	0.5lbs (0.28kg)

Ordering Information

2410MD-HSN	HD Miniature Monitoring Downconverter with 24sF processing (with power supply)

Note: *Enclosure with side mount flanges ships standard*

Ordering Options
Case Option Suffix

+NF	Enclosure without mounting flanges

The 7700PCO is a 1 rack-unit high rack frame designed to fit into a standard 19-inch rack. Special care was taken during the design process to ensure that the unit meets the demanding needs of professional video users and applications.

It is intended to be used only with Evertz line of 7700 Multiframes to provide reliable and high quality back-up power switching. This is ideal for remote applications where main power can be intermittent or where a program feed must be guaranteed at all times.

Features & Benefits

- Seamless, auto switching to external DC supply in case of AC failure
- Standard AC input cord
- Fused DC input on terminal block
- Direct output connection to 7700 frame power supplies
- 30 minutes operation on fully loaded 7700 frame (200W) with dual Anton Bauer Hytron 100 batteries (requires quad battery holder), 60 minutes operation on 100W load (7700 frame about half full dependent on card types)
- Dual power outlets to 7700 frame
- Front panel status LEDs

NOTE:
- Operation times dependent upon type of battery used.
- Operation times will vary

Specifications

Electrical

Power Supply Configuration:	Input A: Auto ranging, 95 ⇔ 264V AC, 47-63Hz Input B: 10 ⇔ 18V DC
Output:	115 ⇔ 370V DC
Maximum Output Power Dissipation:	300W
Fuse:	DC input fuse - rated for 32V min. at 40 amps
Status Indicators:	AC Input Present LED (green) Valid DC Present LED (green) DC Operate LED (green) DC/DC OK LED (green)
Temperature:	0 ⇔ 55°C ambient

Physical

Height:	1.75"H x 19"W x 11.2"D (44.5 mm x 483mm x 285mm)
Weight:	Approx. 7lbs (3.2Kg)

Ordering Information

Note: Enclosure with side mount flanges ships standard

7700PCO	Power Changeover Unit

Ordering Options

IRCBH+AB	Anton Bauer Quad Battery Holder

PKG7700MFOS, PKG7700MFOS-2

Mobile Fiber Optic Systems • Single & Dual Cases

The PKG7700MFOS Single and Dual Case Systems are portable fiber solutions which transmit various signals point to point via fiber. The single system includes a single Mobile Transit Case, 7700FR-C 3RU Multiframe, single Breakout Cable and a 300 meter fiber Cable Reel. The dual system includes (2) Mobile Transit Cases, (2) 7700FR-C 3RU Multiframes, (2) Breakout Cables and a single 300m Fiber Cable Reel. Both systems support multiple wavelengths over a single fiber and are fully bi-directional. Wavelength operation includes WDM, CWDM and DWDM support.

Key features include remote monitoring & control of all 77xx VistaLINK® enabled cards via SNMP. Evertz VistaLINK® monitoring software offers confidence monitoring for mission critical field applications.

The 7700FR-C frame included in the system utilizes any Evertz 77xx series card. Additional options for the PKG7700MFOS system include redundant power supplies for the 7700FR-C frames, Anton Bauer Quad Battery Holder, and the 7700PCO AC/DC Power Changeover Unit.

Signal Types Supported:
- SD-SDI, HD-SDI, Analog video, DVB-ASI
- AES Audio, Analog Audio, Dolby E Audio
- RS-232/422, GPI, GPO
- 10/100 Mbps, Gigabit Ethernet and Fiber Channel
- L-Band R.F. & 70/140 MHz I.F.
- DS-3/E3, T1/E1, Sonet OC3/12
- RTS & Clear-Com Intercom

Note: *All 77xx fiber cards interfacing with the MBL-IRCBP-TAC4-3-ST or the MBL-FS3H-TAC4-3-ST must be ordered with ST/PC connectors for PKG7700MFOS system applications.*

Features & Benefits

- Ideal for mobile productions
- Capacity for multiple wavelengths over single fiber using WDM, CWDM or DWDM
- Fully bi-directional
- Immune to Interference and electromagnetic hum
- Multiple signal type support
- SNMP monitoring via VistaLINK®
- Easy to set up and use - replaces bulky cable harnesses
- TAC-4 single mode cables with hermaphroditic connectors
- Evertz frames utilize any Evertz 77xx series
- Optional redundant 7700PCO (Power changeover) unit for AC/DC backup
- Optional Anton Bauer quad battery holder for Evertz 7700PCO
- Optional breakout cable Delphi Hermaphroditic TAC4 to ST/PC with mounting plate (only for single case system)

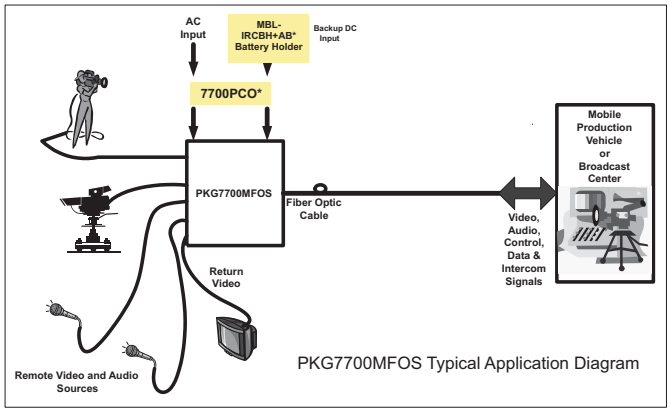

PKG7700MFOS Typical Application Diagram

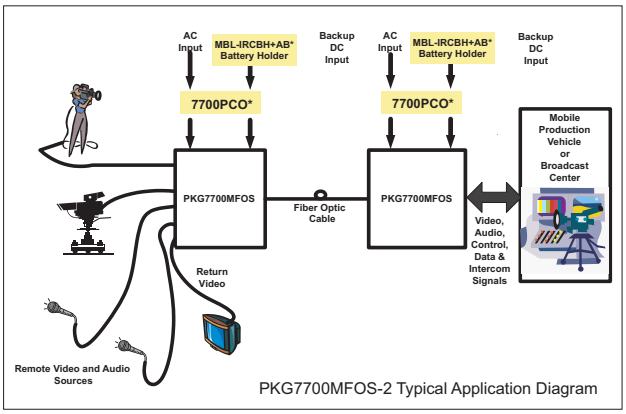

PKG7700MFOS-2 Typical Application Diagram

Ordering Information

PKG7700MFOS **Mobile Fiber Optic System - Single Case**

Includes:

1 x 7700FR-C 3RU Multiframe with power supply and rear plate
1 x MBL-IRC-420 Mobile Transit Case
1 x MBL-IRCBP-TAC4-3-ST
Breakout Cable Delphi Hermaphraditic TAC4 to ST/PC, 1 meter
1 x MBL-FCR-TAC4-300
Cable Reel with 300 meters of cable

PKG7700MFOS-2 **Mobile Fiber Optic System - Dual Case**

Includes:

2 x 7700FR-C 3RU Multiframe with power supply and rear plate
2 x MBL-IRC-420 Mobile Transit Case
2 x MBL-IRCBP-TAC4-3-ST
Breakout Cable Delphi Hermaphraditic TAC4 to ST/PC, 1 meter
1 x MBL-FCR-TAC4-300
Cable Reel with 300 meters of cable

Ordering Options

7700PS Redundant power supply
7700PCO AC/DC Power Changeover Unit
MBL-FCR-TAC4-400 Cable Reel and 400m TAC4, SMF fiber, Hermaphroditic Connectors
MBL-FCR-TAC4-450 Cable Reel and 450m TAC4, SMF fiber, Hermaphroditic Connectors
MBL-FCR-TAC4-500 Cable Reel and 500m TAC4, SMF fiber, Hermaphroditic Connectors
MBL-FCR-TAC4-600 Cable Reel and 600m TAC4, SMF fiber, Hermaphroditic Connectors

MBL-IRCBH+AB Anton Bauer Quad Battery Holder for Evertz 7700PCO
MBL-IRC-420 Impact Resistant Transit Case
MBL-IRCBP-TAC4-3-ST
Breakout cable, Hermaphroditic TAC4 to ST/PC, plastic receptacle
MBL-FS3H-TAC4-3-ST
Breakout cable, Hermaphroditic TAC4 to ST/PC, metal receptacle

ECAS-HD, ECAX-HD, ECAP-HD, ECB-HD

Fiber Optic Enabled Camera Adapter System

The Evertz Camera Adapter system provides a versatile fiber-optic enabled accessory to Sony HDW-F900(R) and XDCAM-HD, Panasonic Varicam and HDX-900 High Definition camcorders. There are three components to the system; each linked via fiber optic cable.

The Camera Adapter and Base Stations are available in several models to support a wide variety of cameras as shown below.

The non-fiber version of the camera-back adapter, and the fiber enabled high definition versions operating as a standalone units, provide HDSDI with embedded audio and time code, NTSC/PAL, SDI and IEEE1394A downconverted video, and 2 analog audio inputs for channels 3 and 4 (on Sony HDCAM models).

When the fiber enabled HD camera adapters are connected to the ECB-HD base station the camera video is transported to the base over fiber and broken out to HDSDI video with embedded audio and time code, analog or AES audio, LTC, NTSC/PAL, SDI and IEEE1394Adownconverted video with time code. The base station has inputs for return HDSDI, NTSC/PAL, 4 channels of analog or AES audio, genlock, time code and IFB. The fiber also transports bi-directional RTS intercom, camera remote control (with viewfinder menus), and contact closure tallies.

When the Camera power option is installed in the base station (-CP versions), the base station can send DC power over a hybrid copper/fiber optic cable to the camera adapter. This DC voltage is converted to battery voltage by the ECA-PS power module, which mounts on the camera adapter in place of a battery. When power is sent down the hybrid cable, the camera and accessories can be powered at a distance up to 2km.

Camera		Camera Adapter Model	Base Station Model
Manufacturer	Models		
Panasonic	HDC-27, HDX-900, HPX2000, HPX500, HPX3000	ECAP-HD	ECB-HD
Sony	HDW-750, HDW-F900, HDW-F900R, HDCAM	ECAS-HD	ECB-HD
Sony	PDW-350, XDCAM-HD	ECAX-HD	ECB-HD

Features & Benefits

Camera-Back Adapter - Standalone and Non-Fiber Features

- Sony HDCAM model connects directly to camera multi-pin connector, serial digital video output with embedded camera time code and audio
- Sony XDCAM and Panasonic models connect to serial digital output from camera - extra serial digital outputs
- Serial digital video input for connecting to "pool feeds"
- NTSC/PAL camera video out downconverted from input HD and aspect ratio converted - supports 4:3 center crop, anamorphic squeeze or 16:9 letter box
- Auxiliary serial digital output switchable as second output from camera, or downconverter SDI
- Sony HDCAM models embed camera time code and audio on serial digital outputs
- IEEE 1394 port for output and control of DV devices
- Sony HDCAM models have inputs for audio 3 & 4 selectable as Line, Microphone (with phantom power) or AES
- Draws power from camera supply (battery connector or 4 pin XLR)
- Sony models vailable with Sony/IDX, PAG or Anton-Bauer battery connectors
- Panasonic models available with Sony/IDX or Anton-Bauer battery connectors
- 12 VDC accessory power outlet
- On Screen Display menu system

Additional Features when connected to Base Station
- Serial digital return video available on Aux SDI output
- 4 channels of AES or Analog Return Audio
- NTSC/PAL Return Video
- Tri-level or bi-level genlock return to camera
- LTC to and from camera
- Camera control from control panel connected to base station (camera menu video input on Sony models)
- 2 channel Intercom - 5-pin XLR headset connector at camera adapter, RTS beltpack connection at base station
- IFB return channel to camera adapter
- Piezo electric speaker with volume control for intercom monitoring
- RS-422/232 channel to base station
- 4 GPI/O channels simple control or tally between camera and base station - 2 each direction
- Status LEDs for SDI and NTSC/PAL return video, Intercom Talk and Fiber Link OK
- Available with LEMO 3K or Fischer 1053 HDTV series fiber-optic connector - contact factory for other connector options

Base Station Features
- Camera serial digital video output
- Return serial digital video input
- NTSC/PAL camera video out, downconverted from HD and aspect ratio converted - supports 4:3 center crop, anamorphic squeeze or 16:9 letter box modes
- Serial digital output from downconverter
- 4 channels of analog audio and AES out (de-embedded from camera serial digital video)
- IEEE 1394 port for output and control of DV devices
- Remote control to camera (camera luminance video output with menus when available on camera
- NTSC/PAL Return Video In
- Genlock In (Analog black burst or Tri-level)
- 4 channels of analog audio or AES in (return audio to camera adapter-selectable)
- Support for RTS intercom - belt pack 3 pin XLR interface
- IFB return input to camera adapter
- RS-422/232 channel to camera adapter
- 4 GPI/O channels simple control or tally between camera and base station - 2 each direction
- LTC In to camera from external Time code generator
- LTC Out from camera Time code generator
- Front panel control via pushbuttons and LED display
- Status LEDs for Camera Video, Audio and Time code present, Return video, audio and time code, genlock, intercom, IFB present, and fiber links OK
- Status LEDs for camera power ON and Ground Fault on CP versions
- 1 rack unit main frame with 1 rack unit audio breakout panel
- Auto-ranging 100-240VAC 50/60 Hz power supply
- Optional high voltage DC supply to send camera power to ECA-PS power converter (-CP version)
- Front panel power switches for Base power and Camera power (-CP versions)
- Available with LEMO 3K or Fischer 1053HDTV series fiber-optic connector - contact factory for other connector options
- Ethernet port for network upgrade + configuration

Ordering Information

CAMERA ADAPTER (Must specify Battery Bracket option and camera model accessory kit option)

For Sony HDCAM Cameras with 50-pin connector (HDW-750, HDW-F900, HDW-F900R, etc.)

ECAS-HD	Camera Adapter for HDCAM Sony cameras
ECAS-1394-HD	Camera Adapter with 1394A I/O for HDCAM Sony cameras
ECAS-1394-LEMO-HD	Camera Adapter with 1394A I/O and fibre optic I/O for HDCAM Sony cameras - LEMO fiber connector

For Sony XDCAM-HD Cameras with HDSDI outputs (PDW-350, etc.)

ECAX	Camera Adapter for XDCAM-HD Sony cameras
ECAX-1 394	Camera Adapter with 1 394A I/O for XDCAM-HD Sony cameras
ECAX-1 394-LEMO	Camera Adapter with 1 394A I/O and fiber optic I/O for XDCAM-HD Sony cameras-LEMO fiber connector

For Panasonic HD Cameras with HDSDI output (AJ-HDC20A, AJ-HDC27 Varicam, HDX-900, HPX500, HPX2000, HPX3000 etc.)

ECAP-HD	Camera Adapter for high definition Panasonic cameras
ECAP-1394-HD	Camera Adapter with 1394A I/O for HD Panasonic cameras
ECAP-1394-LEMO-HD	Camera Adapter with 1394A I/O and fibre optic I/O for HD Panasonic cameras - LEMO fiber connector

Base Station (Must Specify same Fiber Optic connector as Camera Adapter):

ECB-LEMO-HD	Base Station for HD camera adapters - LEMO fiber connector
ECB-CP-LEMO-HD	Base Station for HD camera adapters - with DC camera power (requires ECA-PS Power Converter) - LEMO fiber connector

Power Converter (Must specify same Battery Bracket option as Camera Adapter)

ECA-PS	120 Watt output Camera Adapter DC-DC Power Converter - for use with camera adapters with fiber optic I/O and CP version Base Stations
ECA-PS-160	160 Watt output Camera Adapter DC-DC Power Converter - for use with camera adapters with fiber optic I/O and CP version Base Stations

Ordering Options:
Battery Bracket Options:
(Must specify for Camera adapters and ECA-PS power converter)

+AB	Bracket for Anton Bauer batteries
+IDX	Bracket for IDX V-mount batteries
+PAG	Bracket for PAGlok batteries

Camera Model Accessory Kit Options:
(Must specify for Camera adapters)

+HDCAM	For Sony HDCAM Cameras
+XDCAM	For Sony XDCAM-HD camera
+VARICAM	For Panasonic Varicam
+HDX	For Panasonic HDX-900, HPX2000, HPX500, HPX3000

Fiber Optic Connector Options:
Camera adapters and base stations are also available with the following fiber connectors:
Fischer 1053 HDTV series
(Contact factory for ordering information and availability)

Accesories:

ECAS-ACC-MNT	Accessory mounting bracket for wireless microphone, studio viewfinder, etc
ECAS-PAN-MNT-KIT	Mounting kit to use Sony HDCAM camera adapter with Panasonic camera - must specify +VARICAM or +HDX accessory kit for camera remote cables

Replacement Cables:
(Original cables included with units)

WPECA-PS-PWR-RA	ECAS-PS power input cable (Incl. with ECA-PS & ECA-PS-160)
WPECA-REM-SONY8P	ECAS to Sony 8 pin remote cable (Incl. with +HDCAM & +XDCAM)
WPECA-REM-PAN6P	ECAP to Panasonic 6 pin remote cable (Incl. with +VARICAM)
WPECB-EC3-PAN6P	ECB to Panasonic EC3 adapter cable (Incl. with +VARICAM)
WPECA-REM-PAN10P	ECAP to Panasonic 10 pin remote cable (Incl. with +HDX)
WPECB-RC10G-PAN10P	ECB to Panasonic RC10G adapter cable (Incl. with +HDX)

7732DVP-HD

HD Dual Link Video Processor

The 7732DVP-HD Dual Link Video Processor module is a multi-purpose module designed to convert between 4:2:2 and 4:4:4 HDTV video signals in a wide variety of applications. The model 7732DVP-HD can be operated in a dual link to single link mode for emerging 4:4:4 high definition applications, or a 4:2:2 to 4:4:4 mode to convert traditional high definition content to 4:4:4.

The 7732DVP-HD occupies one card slot in the 3 RU frame, which will hold up to 15 modules or the 1RU frame, which will hold up to three modules.

Features & Benefits

- Automatically senses between 1080i/60, 1080i/50, 1080p/24sF, 720p/60, 720p/50 video formats and the 1/1.001 divisor versions where applicable
- 4:4:4 Dual Link HDSDI to 4:2:2 HDSDI converter
- 4:2:2 HDSDI to 4:4:4 Dual Link HDSDI converter
- 4:4:4 Dual Link HDSDI to 4:4:4 HDSDI with LUTs
- Two serial digital 1.5 Gb/s HD inputs per SMPTE 292M
- Three serial digital 1.5 Gb/s HD outputs per SMPTE 292M
- Bypass relay protection on inputs for power failures
- Retimed 4:4:4 dual link outputs
- Programmable LUTs for 4:4:4 and 4:2:2 HDSDI to accommodate different colorimetry between monitoring devices - (user loadable LUTs not available at time of writing)
- Factory LUTs handle logarithmic 'filmstream' inputs from VIPER and ARRI D20 cameras
- Store/recall user presets of common configurations - up to 10 presets
- 6 GPI control inputs to select operating modes or load user presets
- 2 GP0 status outputs indicate operating modes - programmable functions
- Card edge menu using OSD on 4:2:2 output to configure the operating modes
- Card Edge LEDs for signal presence, module status
- VistaLINK® - capable offering remote monitoring, control and configuration capabilities via SNMP. VistaLINK® is available when modules are used with the 3RU 7700FR-C frame and a 7700FC VistaLINK® Frame Controller module in slot 1 of the frame using the model 9000NCP Network Control Panel or Evertz VistaLINK® PRO or other third party SNMP manager software

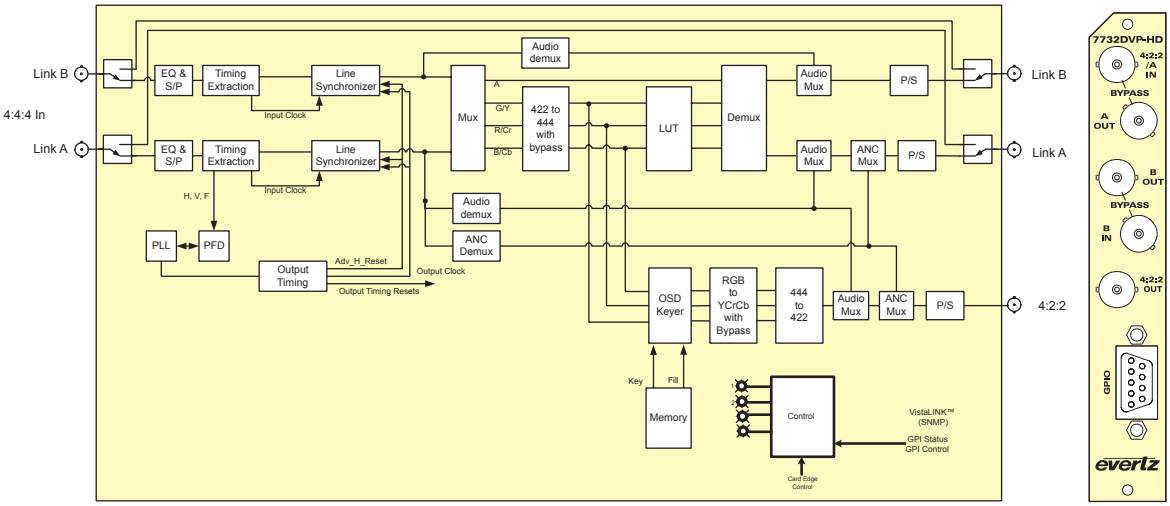

Specifications

Serial Video Input:

Standard:	SMPTE 372M (dual Link 1.5 Gb/s) or SMPTE 292M (1.5 Gb/s) - auto-detects standard SMPTE 274M, SMPTE 296M - 1080i/60, 1080i/50, 1080p/24sF, 720p/60, and 720p/50 and the 1/1.001 divisor versions where applicable
Number of Inputs:	1 dual link or 1 single link
Connector:	BNC per IEC 60169-8 Amendment 2.
Input Equalization:	Automatic to 100m @ 1.5Gb/s with Belden 1694 or equivalent cable
Return Loss:	>-15 dB up to 1.5GHz

Serial Video Outputs:

Standard:	Same as input
Number of Outputs:	2 dual link outputs (bypass relay protected to inputs) 1 single link output
Connector:	BNC per IEC 60169-8 Amendment 2
Signal Level:	800mV nominal
DC Offset:	0V ±0.5V
Rise and Fall Time:	200ps nominal
Overshoot:	<10% of amplitude
Return Loss:	> -10 dB at 1.5 Gb/s (4:4:4 outputs) > -6 dB at 1.5 Gb/s (4:2:2 output)
Jitter:	< 0.2UI

GPIO Control Port:

Number of Inputs:	6 Programmable functions
Number of Outputs:	2 Programmable functions
Type:	Opto-isolated, active low with internal pull-ups to +5 or +12V (jumper settable)
Connector:	9 pin female D
Signal Level:	closure to ground

Input to Output Processing Delay (HD input video):

Video Delay:	2 lines

Electrical:

Voltage:	+12VDC
Power:	10 W
EMI/RFI:	Complies with FCC regulations for class A devices Complies with EU EMC directive

Physcial:

Number of slots:	1

Ordering Information

7732DVP-HD	HD Dual Link Video Processor

Ordering Options

Rear Plate must be specified at time of order
Eg: Model +3RU

Rear Plate Suffix

+3RU	3RU Rear Plate for use with 7700FR-C Multiframe
+1RU	1RU Rear Plate for use with 7701FR Multiframe
+SA	Standalone Enclosure Rear Plate

Enclosures

7700FR-C	3RU Multiframe which holds up to 15 single slot modules
7701FR	1RU Multiframe which holds up to 3 single or dual slot modules
S7701FR	Standalone enclosure

The Evertz 7732DVP-3D-HD Video Processor module is a multi-purpose module designed specifically to aid in the production and post production of 3D high definition video productions.

This 7700 series module provides for Left eye and Right eye inputs and processed outputs. In addition it also provides a mix output that is a combination of the left eye and right eye.

The 7732DVP-3D-HD occupies one card slot in the 3 RU frame, which will hold up to 15 modules or the 1RU frame, which will hold up to three modules.

Features & Benefits

- Two serial digital 1.5 Gb/s HD inputs per SMPTE 292M
- Three serial digital 1.5 Gb/s HD inputs per SMPTE 292M
- Supports most international standards including 1080i/60, 1080i/59.94, 1080i/50, 1080p/24sF, 1080p/23.98sF, 1080p/30, 1080p/29.97, 1080p/25, 1080p/24, 1080p/23.98, 720p/60, 720p/59.94, 720p/50
- Horizontal flip can be applied to left or right eye input
- Programmable left or right horizontal can be applied to either left or right eye inputs
- Programmable up or down vertical shift can be applied to either left or right eye inputs
- Mix output provides a processed combination of the left and right eyes in the following modes - 50/50 linear mix, left - right difference, horizontal 50/50 split
- Left and right eye source ID embedded in ATC user bits on left and right eye outputs - requires 7760AVM2-HD+SID decoder card to view the source ID codes
- 8 Programmable GPI control inputs - select mix modes, adjust horizontal and vertical shift
- Card edge menu using OSD on Mix output to configure the operating modes
- Card Edge LEDs for signal presence, module status

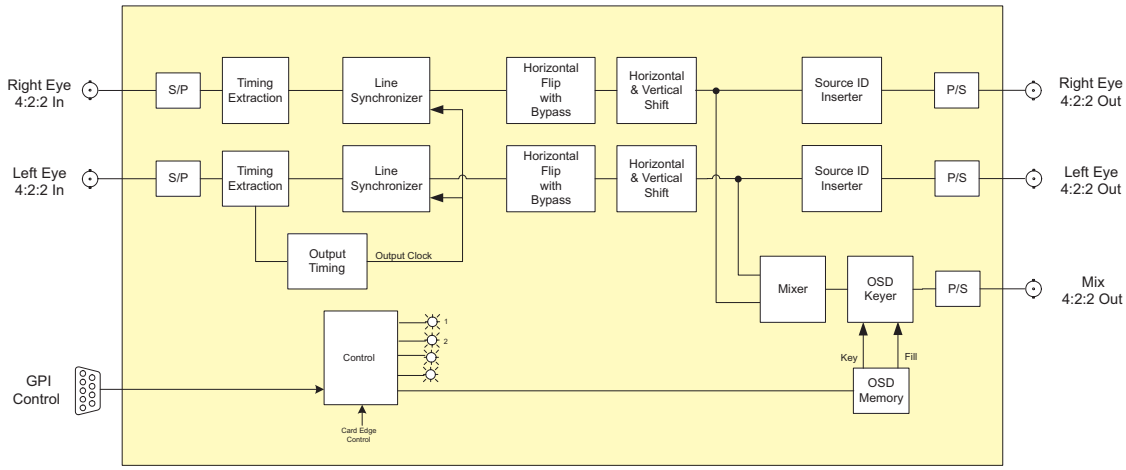

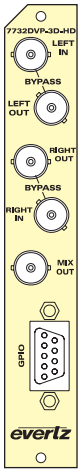

Specifications

Serial Video Inputs:

Standard:	1.485 Gb/sec SMPTE 292M - auto-detects standard SMPTE 274M, SMPTE 296M - 1080i/60, 1080i/59.94, 1080i/50, 1080p/24sF, 1080p/23.98sF, 1080p/30, 1080p/29.97, 1080p/25, 1080p/24, 1080p/23.98, 720p/60, 720p/59.94, 720p/50
Number of Inputs:	2
Connector:	2 BNC per IEC 60169-8 Amendment 2.
Input Equalization:	Automatic to 65m @ 1.5Gb/s with Belden 1694 or equivalent cable
Return Loss:	>12 dB up to 1.5GHz

Serial Video Outputs:

Standard:	Same as input
Number of Outputs:	2 Program outputs 1 Mix output
Connector:	BNC per IEC 60169-8 Amendment 2
Signal Level:	800mV nominal
DC Offset:	0V ±0.5V
Rise and Fall Time:	200ps nominal
Overshoot:	<10% of amplitude
Return Loss:	> 15 dB at 1.5 Gb/s
Jitter:	< 0.16UI (HD)

GPIO Control Port:

Number of Inputs:	8
Type:	Opto-isolated, active low with internal pull-ups to +5 or +12V (jumper settable)
Connector:	9 pin female D
Signal Level:	closure to ground

Input to Output Processing Delay (HD Input Video):

Video Delay:	2 lines

Electrical:

Voltage:	+12VDC
Power:	10 Watts
EMI/RFI:	Complies with FCC regulations for class A devices Complies with EU EMC directive

Physical:

Number of slots:	1

Ordering Information

7732DVP-3D-HD HD 3D HD Video Processor

Ordering Options
Rear Plate must be specified at time of order
Eg: Model +3RU

Rear Plate Suffix

+3RU	3RU Rear Plate for use with 7700FR-C Multiframe
+1RU	1RU Rear Plate for use with 7701FR Multiframe
+SA	Standalone Enclosure Rear Plate

Enclosures

7700FR-C	3RU Multiframe which holds up to 15 single slot modules
7701FR	1RU Multiframe which holds up to 3 single or dual slot modules
S7701FR	Standalone enclosure

HD9690 & HD9690-444

HDTV Graticule Generator

The HD9690 & HD9690-444 Graticule Generators are multi format High Definition video graticule generators that key various alignment markers and mattes over a source video picture in a wide variety of applications. The HD9690-444 can be operated in a dual link mode for emerging 4:4:4 high definition applications, or a 4:2:2 mode for traditional high definition (1125 and 750 line) digital video. The model HD9690 can only be operated in a 4:2:2 mode.

Commonly used configurations, stored as factory presets simplify routine operation to just a few pushbuttons. The ability to customize these factory presets to your application and store them as USER PRESETS, gives the Graticule Generator tremendous flexibility while maintaining simple operation for day to day use.

Both units are a 1RU chassis with integrated control panel. The HD9690 & HD9690-444 are also available in a remote control version, which has a blank front panel and either a rack mountable, or a desktop remote control panel.

Features & Benefits

- Automatically senses between 1080i/60, 1080i/50, 1080p/24, 1080p/24sF, 720p/60 and 720p/50 video formats and the 1/1.001 divisor versions where applicable
- HD9690 keys Graticule markers directly into 4:2:2 SMPTE 292M High Definition Serial digital video
- DVI-I Output for display on flat screen or computer monitors
- Two rectangular boxes that can be independently resized reshaped and moved anywhere on raster
- A grid consisting of horizontal and vertical line pairs that can be positioned independently or in pairs anywhere on the raster
- Programmable horizontal and vertical hard matte
- Two User programmable cross markers, positionable anywhere on the raster (one on DCP version)
- Ellipse creation for aspect ratio verification
- Automatic creation of aspect ratios for mask, box and ellipse objects
- On-screen display shows object size, position and aspect ratio
- Automatic centering of all objects or individual object by object control of centering
- Single button keyer on/off control
- Adjustable object brightness and color
- Front panel lock-out control
- Easy to operate front panel menu system gives access to advanced object control features for the most demanding application, while limiting normal day to day use to just a few preset buttons
- Factory Presets allow quick setup to common object placements on the raster
- Ten user-definable presets with user definable labels and individual write protect allow unlimited customization for any requirement
- Optional Rack mount or Desktop remote control panels

Additional Features for the HD9690-444

- Keys Graticule markers directly into SMPTE 372M and SMPTE 292M High Definition Serial digital video
- Can be operated in 4:4:4 RGB or YCbCr dual link mode with 4:2:2 output or 4:2:2 single link mode - manual select or autodetect
- Handles extended range (full scale) 4:4:4 RGB with conversion to full scale or legal ITU-R BT.709 YCbCr on the 4:2:2 single link output

Specifications

Serial Digital Video Input:

Standard:	
HD9690	SMPTE 292M 1.5Gb/s
HD9690-444	SMPTE 372M Dual link 1.5Gb/s or SMPTE 292M 1.5Gb/s
Number of Inputs:	
HD9690	1
HD9690-444	1 dual link
Connector:	BNC per IEC 60169-8 Amendment 2
Equalization:	Automatic up to 50m with Belden 1694A or equivalent cable
Return Loss:	> 15dB up to 1.0Gb/s, > 10dB up to 1.5Gb/s

Serial Video Output:

Standard:	Same as input
Number of Outputs:	
HD9690	3
HD9690-444	1 dual link, 1 single link
Connector:	BNC per IEC 60169-8 Amendment 2
Signal Level:	800mV nominal
DC Offset:	0V ±0.5V
Rise and Fall Time:	200ps nominal
Overshoot:	< 10% of amplitude
Wideband Jitter:	< 0.2 UI
Output Return Loss:	> 10dB up to 1.5Gb/s

DVI Video Output:

Standards:	VESA (DVI-I, for DVI-D and RGBHV outputs)
Type:	DVI-I female connector
Resolution:	1920x1080 or 720x1280 - same as video input
Signal Level:	1V nominal

GPI Control Port:

Number of Inputs:	8 opto-isolated, active high or active low, programmable functions
Connector:	Female DB-9

Upgrade Control Port:

Standard:	RS 232
Connector:	Female DB-9
Baud Rate:	115200
Format:	8 bits, no parity, and 2 stop bits

Ethernet:

Network Type:	Fast Ethernet 100 Base-TX IEEE 802.3u standard for 100 Mb/s base band CSMA/CD local area network Ethernet 10 Base-T IEEE 802.3 standard for 10 Mb/s baseband CSMA/CD local area network
Connector:	RJ-45
Function:	FTP firmware upgrade, save or recall presets via FTP

Remote Control Port (+RCP and +DCP options only):

Standard:	RS-422, 9600 baud rate
Connector:	Female DB-9
Protocol:	Remote Control Panel

Physical:

Main Unit:	19" W x 1.75" H x 18.75" D (483mm W x 45mm H x 477mm D)
Rack Mount Control Panel:	19" W x 1.75" H x 4.25" D (483mm W x 45mm H x 110mm D)
Desktop Control Panel:	7.75" W x 2.0" H x 6.5" D. (197mm W x 50mm H x 160mm D)
Weight:	8lbs (3.5kg)

Electrical:

Main Unit:	
Voltage:	Auto ranging 100 to 240 Volts AC, 50/60Hz 40W
Desktop + Rack Mount Control Panel:	
Voltage:	12V DC, Auto ranging 100 to 240 Volts AC, 50/60Hz adapter provided, 10W
Safety:	ETL Listed, complies with EU safety directives
EMI/RFI:	Complies with FCC Part 15 Class A regulations Complies with EU EMC directive

HD9690 Block Diagram

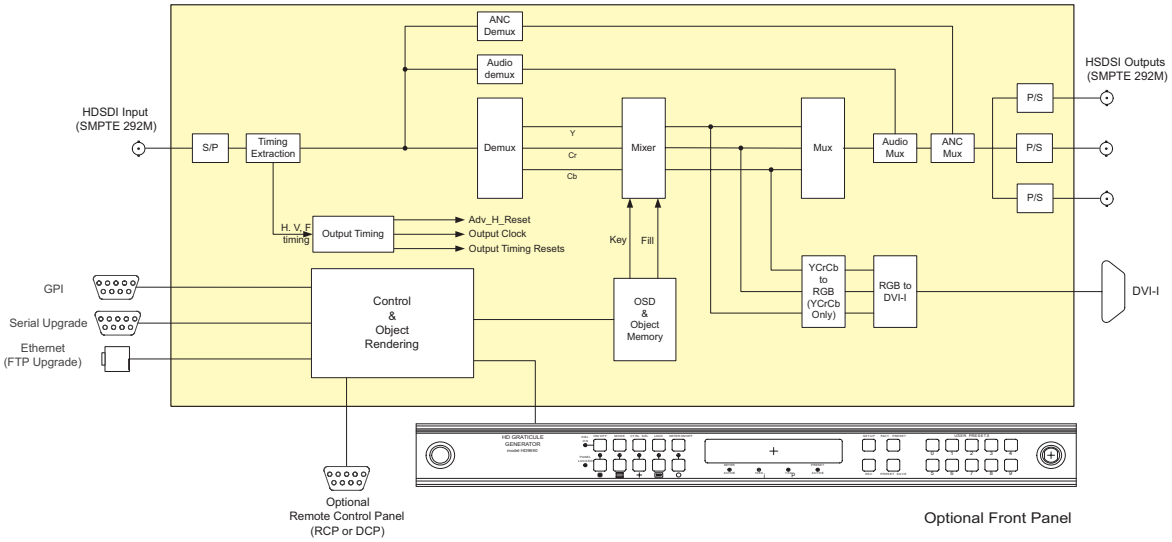

HD9690-444 Block Diagram

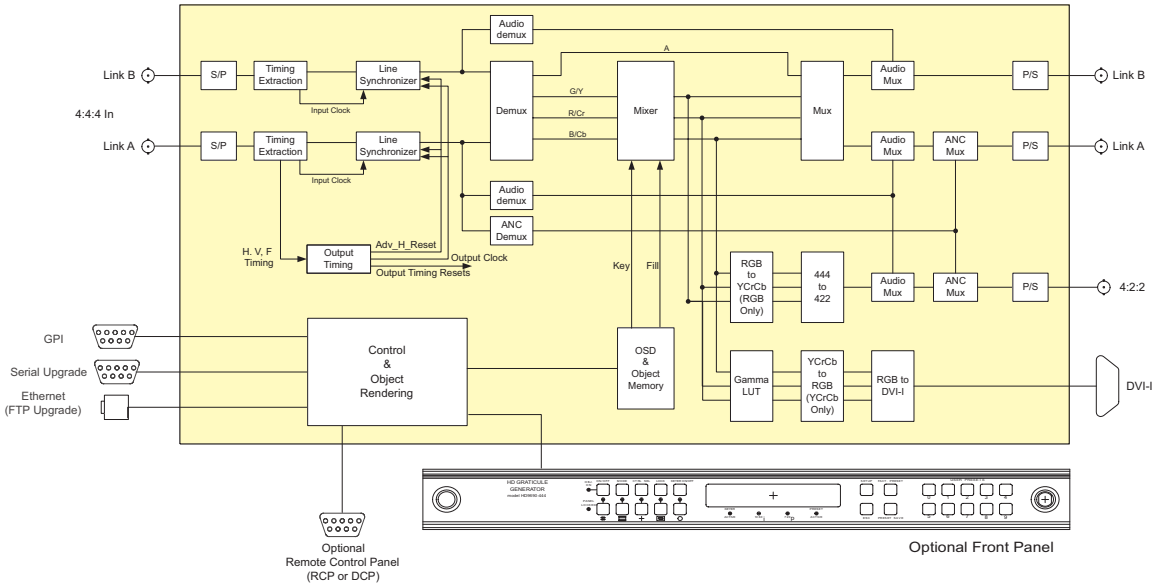

Ordering Information

HD9690	HD Graticule Generator
HD9690-444	4:4:4 Graticule Generator

Ordering Options

+RCP	Rackmount remote control
+DCP	Desktop remote control unit

9590 Graticule Generator

SDI Digital Graticule Generator

The 9590 is an easy to use, one rack unit, dual standard digital video graticule generator that keys various alignment markers over a standard definition video picture. These alignment markers facilitate film transfer, post production and quality control measurements relating to picture location for various film aspect ratios, safe action and safe title areas as well as picture center.

All of the functions of the 9590 are available from the control panel or one of two remote control panels. Choose from the many factory programmed presets or define your own. The 9590 allows for multiple user-defined presets that can be re-called and re-defined at any time.

Features & Benefits

- Keys graticule markers directly into SMPTE 259M-C serial digital video
- Auto detects between 525i/59.94 and 625i/50 video formats
- Two rectangular boxes that can be independently resized, reshaped and moved anywhere on the raster
- A grid consisting of horizontal and vertical line pairs that can be positioned independently or in pairs anywhere on the raster
- Programmable horizontal and vertical hard matte
- Adjustable mask starting line in vertical blanking interval to pass VITC or VITS
- Two user-programmable cross markers positionable anywhere on the raster
- Circle creation for aspect ratio
- Automatic creation of aspect ratios for matte, box and circle objects
- On-screen aspect ratio display
- Automatic centering control for all objects
- Switchable 16:9 or 4:3 pixel aspect ratios to allow easy alignment where anamorphic compression has taken place
- Single button keyer On/Off control
- Adjustable object brightness (white level)
- Front panel lock-out control
- Easy to operate control panel menu system gives access to advanced object control features for the most demanding application, while limiting normal day to day use to just a few preset buttons
- Factory presets allow quick setup to common object placements on the raster
- Ten user-definable presets with individual write protection
- Optional rack mount or desktop remote control unit

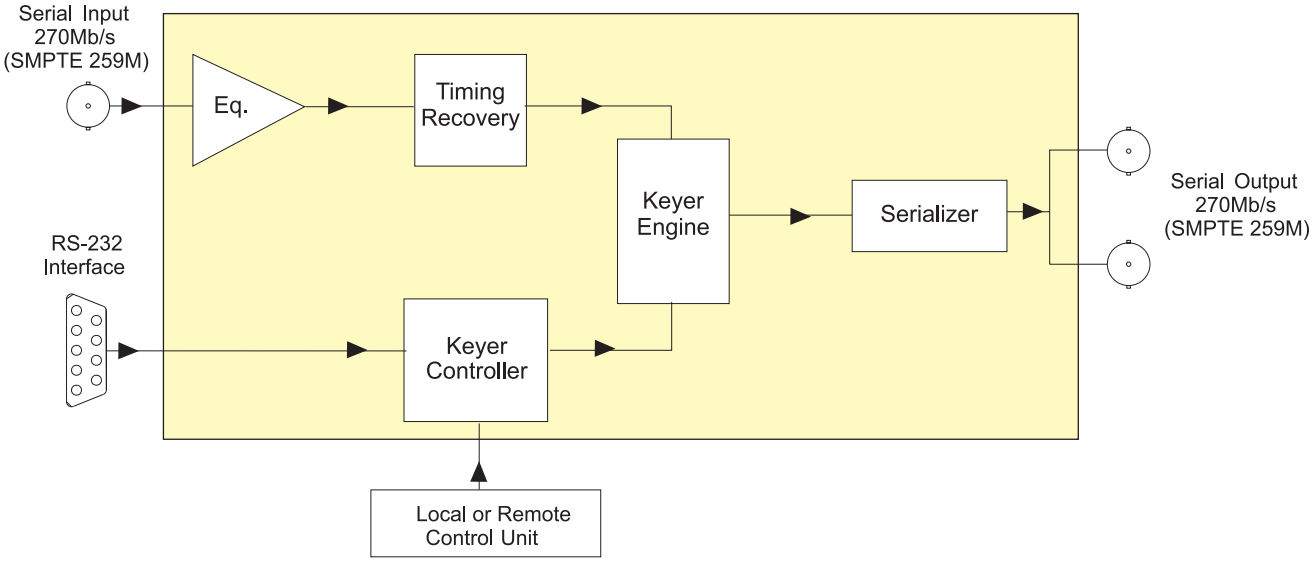

Specifications

Serial Video Input:

Standard:	Serial component SMPTE 259M-C
Connector:	BNC per IEC 60169-8 Amendment 2
Impedance:	75Ω
Signal Level:	800mV ±10%
Equalization:	Automatic to 200m @ 270Mb/s with Belden 8281 (or equivalent)
Return Loss:	> 15dB up to 270Mb/s

Serial Video Output:

Standard:	Serial component SMPTE 259M-C
Number of Outputs:	2
Connector:	BNC per IEC 60169-8 Amendment 2
Impedance:	75Ω
Signal Level:	800mV nominal
DC Offset:	0V ±0.5V
Rise and Fall Time:	900ps nominal
Overshoot:	< 10% of amplitude (All outputs terminated)
Wide Band Jitter:	< 0.2 UI
Serial Remote Ctl:	RS-232/422 interface, 9-pin "D" connector for software upgrades

Physical:

Dimensions:	19"W x 1.75"H x 18.75"D. (483mm W x 45mm H x 477mm D)
Weight:	8lbs (3.5kg)

Electrical:

Power:	Auto ranging 100-240V AC 50/60Hz 40W
Safety:	ETL listed Complies with EU safety directive
EMI/RFI:	Complies with FCC Part 15 Class A EU EMC Directive

Ordering Information

9590	SDI Digital Graticule Generator

Ordering Options

+RCP	Rackmount remote control Option
+DCP	Desktop remote control unit Option

The 7732PFT-HD Progressive Format Translator converts 1.5 Gb/s HDTV video in the 1080p/24sF format to 1080i/60 digital video, thus allowing these signals to be viewed at a higher video refresh which eliminates the annoying 24 Hz flicker. The 7732PFT-HD inserts extra fields to create a 3:2 pulldown of the picture content to increase the video frame rate from 24 to 30.

When an input video feed of 1080p/24sF is detected, a 3:2 pulldown of the picture is inserted resulting in a 1080i/60 output. Determination of the output sequence of the fields is determined from a 6 Hz input pulse on GPI5, or from ancillary time code if it is present. DIP switches allow the user to determine how the output pulldown aligns to the 6 Hz input or ancillary timecode. If an input video feed of 1080i/60 or any other format is detected, it is simply passed through.

When the 3:2 pulldown mode is turned off with a DIP switch or GPI input, the output video remains the same as the input video. An output tally indicates when the 3:2 pulldown mode is active and may be used to control external audio delay devices. Figure 1 shows the process of creating the 3:2 pulldown from the progressive video input with the DIP switches set to the default position.

Features & Benefits

- Automatic detection of 1080p/24sF video or 1080i/60 video input
- 3:2 cadence of output set from 6Hz pulse input or incoming RP188 ANC time code
- 4:3 and 2.4:1 aspect ratio markers
- GPI Control of pull-down & aspect ratio markers
- Tally output indicates 3:2 pull-down insertion

Input
- SMPTE 292M - 1.5Gb/s serial digital 1080p/24sF (23.98Fps)
- Transparent pass-through input for all other SMPTE 292M HD video formats
- Auto equalization to 130m

Outputs
- 2 serial HD SDI processed outputs
- When 3:2 pull-down mode is active the 1080p/24sF (23.98Fps) input video is format converted to 1080i/60 (29.97Fps) on the output

Card Edge LEDs
- Video signal presence
- Pull-down active
- Module status
- Local fault

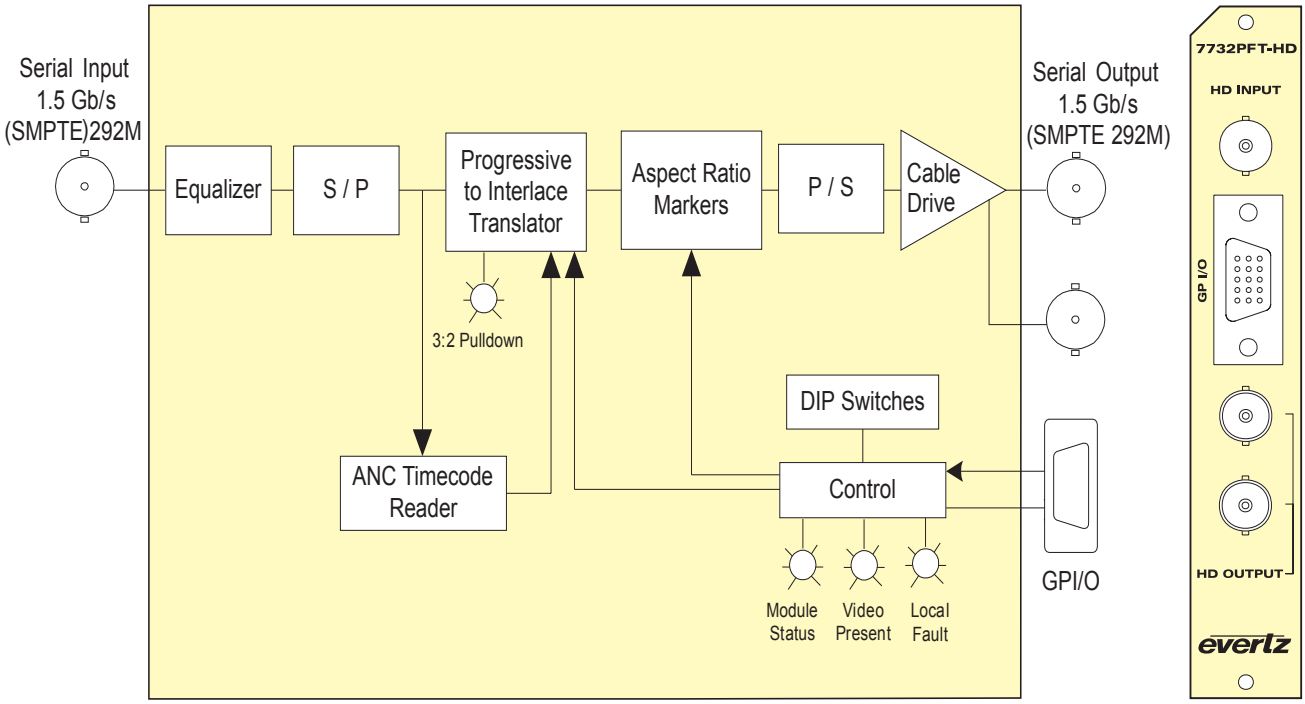

Serial Video Input (1080p/24sF):

Standard:	SMPTE 292M
Connector:	BNC per IEC 60169-8 Amendment 2
Equalization:	Automatic to 130m @ 1.5Gb/s with Belden 1694A (or equivalent)

Serial Video Outputs with 3:2 pulldown (1080i/60):

Connectors:	2 BNC per IEC 60169-8 Amendment 2
Signal Level:	800mV nominal
DC Offset:	0V ±0.5V
Rise and Fall Time:	200ps nominal
Overshoot:	< 10% of amplitude
Wide Band Jitter:	< 0.2 UI

GPIO:

Connector:	Female High Density dB-15
Impedance:	Opto-isolated, High-Z
Inputs:	2 for Aspect Ratio markers 1 for 6Hz input or pull-down disable
Outputs:	1 for 3:2 pull-down tally

Electrical:

Voltage:	+12V DC
Power:	6W
EMI/RFI:	Complies with FCC Part 15, Class A EU EMC Directive

Physical:

Number of Slots:	1

Ordering Information

7732PFT-HD	HDTV Progressive Format Translator
Ordering Options	Rear Plate must be specified at time of order Eg: Model +3RU

Rear Plate Suffix

+3RU	3RU Rear Plate for use with 7700FR-C Multiframe
+1RU	1RU Rear Plate for use with 7701FR Multiframe
+SA	Standalone Enclosure Rear Plate

Enclosures

7700FR-C	3RU Multiframe which holds up to 15 single slot modules
7701FR	1RU Multiframe which holds up to 3 single or dual slot modules
S7701FR	Standalone enclosure

5550

Universal Data Reader & Decoder

The Evertz Universal Film Reader/Decoder system provides multi-format reader head and decoder to handle all the major film formats and all the various codes presently in use, all in one easy to install head and a separate 1RU decoder unit. This new break-through technology vastly simplifies the telecine bay operation by having a complete solution in one system while providing scalable purchase options.

Evertz KeyKode reader heads can be mounted on a telecine or other film transport, to recover KeyKode and Film Time code numbers from 16, super 16, 35 or 65mm film. Operationally the design is absolute simplicity. When switching between 16 or 35mm film, there are no levers, adjustments or realignments involved on most telecines.

With the Evertz combination KeyKode reader system, varying film densities, negative and positive material are handled with ease. The Evertz universal decoder unit (model 5550) features a simple to use automatic light and sensor control.

Features & Benefits

- Can be mounted on a variety of film transports including Cintel, Thomson/GVG and Flat beds etc. The universal mounting bracket offers easy to use rotational positioning for hassle free installation
- The KeyKode/Film Time code heads can be ordered in different configurations depending on your application
- The head "floats" laterally on precision guides to assure perfect KeyKode tracking at play and shuttle speeds. The Floating design also handles film weave due to oversized rollers (common on many Telecines)
- OnTouchless version, the film does not come in contact with the Reader Head assembly
- The optical design improves depth of field, gaining sharpness over the entire film gap
- Highly polished hard anodized surfaces and smooth round edges help protect your valuable film
- The rollers are made from finely machined highly polished stainless steel
- Simple to use diagnostics for monitoring performance and trouble shooting marginal quality code
- Ideal for non-real-time data mode transfers with Thomson/GVG Spirit 2K/4K, Cintel, C-Reality and Millennium
- Decoder can be located up to 50ft. from the film data reader
- Incorporates FLASH technology for easy software upgrading in the field, ensuring support of new film stocks as quickly as possible
- Ability to read KeyKode and Film Time code at speeds other than play speed in forward and reverse
- Front panel display of KeyKode or Film Time code.
- Automatic sensor intensity control can track various film densities on a single roll
- Separate intensity controls for KeyKode and Film Time code
- 16 digit alpha-numeric front panel display
- 19" rackmountable hardware

5550 Universal Film Data Reader

The Evertz Universal Film Data reader system can be used with any of the Evertz Film Footage Encoders to encode KeyKode & Film time code into VITC or VANC data. It can be ordered separately or as a part of a Film Footage Encoder system.

The Evertz Film Reader system can be purchased in a variety of configurations. Because these reader heads cannot be retrofitted in the field, it is important to specify the exact model number at the time of order. See the ordering information chart for a list of model numbers and corresponding options.

Our new Touchless Reader Head recovers KeyKode and Film Time code without coming into contact with the film stock. Please specify the Touchless version when ordering.

	16mm	35mm	65mm	KeyKode	AATON I and AATON II	ARRI	Touchless
KR-65			✓	✓			
KR-16/35	✓	✓		✓			
UV-3	✓	✓		✓	✓	✓	
UVT-3	✓	✓		✓	✓	✓	✓

Specifications

(UV series) Multi-Function Reader Head :

Connector:	15-pin High Density female "D"
Max. Cable Length:	50 feet
Codes Read:	KeyKode, Aaton, Aaton Code II, Arri

KeyKode Reader Head Interface (KR series heads):

Connector:	8-pin miniature female DIN
Max. Cable Length:	50 feet
Codes Read:	KeyKode

LTC Output:

Standard:	SMPTE 12M compliant
Frame Rate:	24, 25 and 30 Fps nominal from film time code
Connector:	3-pin male XLR type
Level:	Adjustable, 0.5V to 4.5V p-p

Parallel I/O:

Connector:	9-pin female D
Biphase Tach:	1, 2, 5 or 10 pulses per frame TTL level biphase quadrature
GPI:	Film Type (negative/print) Film Gauge (16/35 mm)

Serial Ports:

Number of Ports:	2
Standard:	RS-232
Baud Rate:	9600 or 38400 independently settable
Format:	7 bits, even parity
Connectors:	9-pin female D

Physical:

Dimensions:	19"W x 1.75"H x 7.75"D (483mm W x 45mm H x 196mm D)
Weight:	6.7lbs (3kg)

Electrical:

Power:	115/230 V AC 50/60Hz, 30W
Safety:	ETL Listed Complies with EU safety directive
EMI/RFI:	Complies with FCC Part 15 Class A, EU EMC Directive

Ordering Information

Decoder can be ordered separately or as a system which includes the Decoder, Head, Bracket & Cable. Systems may also be ordered with Film Footage Encoders (see Film Footage Encoder data sheets for information).

5550	Universal Decoder
5550/KR-16/35	5550 Decoder with KR16/35 Head & 10 ft. cable
5550/UV-3	5550 Decoder with UV-3 Head & 20 ft. cable
5550/UVT-3	5550 Decoder with UVT-3 (touchless) Head & 20 ft. cable

Accessories

EV-BRKT	Universal Reader Mounting Bracket
FDL-SHIMS	Shim kit for BTS, FDL 60/90, Quadra
CINTEL-SHIM	Shim kit for Cintel C-Reality 16/35 heads
WA-S19	C-Reality Cable Harness
WA-F49	50ft extender cable for KR series heads
WA-P57	50ft extender cable for UV series heads
KKFILM-16MM	16mm Kodak Keykode Verification Film
KKFILM-35MM	35mm Kodak KeyKode Verification Film
KKFILM-S16MM	Super 6mm Kodak KeyKode Verification Film

HDSD9155Q

HD/SD Afterburner

The HDSD9155Q Afterburner is a powerful device designed to facilitate the creation of off-line videotapes from telecine or field acquired 4:4:4 or 4:2:2 HDTV masters. The HDSD9155Q can be operated as a high quality downconverter or as a character inserter on the native HDTV signal. Embedded audio present on the input video is reinserted on the serial digital outputs in time with the picture. The Afterburner can operate in a 'film mode' working with telecine masters or a 'video mode' working with field acquired HDTV.

As a high quality downconverter the Afterburner provides two clean (characters optional) SDI downconverted outputs with VITC, suitable for creation of high quality viewing copies, and two SDI and one analog monitoring output with VITC and characters suitable for monitoring or creation of tapes for non-linear editing systems. When the input video is in the 1080p/24sF format the Afterburner also creates a 2:3 pulldown on the output video to create a 30 Fps output. The Afterburner automatically generates video timecode for the standard definition VTR that is converted from 24 to 30 Fps, and delayed to match the complete A frame cycle of delay through the Afterburner. When outputting the native HDTV input, the Afterburner provides two clean 4:2:2 HDSDI program outputs (with optional characters for virtual slates, etc.) and two 4:2:2 HDSDI monitor outputs with characters burned in.

In 'film mode' the Afterburner reads the RP215 Film transfer data that was recorded in the VANC data area by the Evertz HD Film Footage Encoder during the telecine transfer, and makes burn-in windows. When operating as a downconverter, the essential timecode and KeyKode data is also converted into RP201 3-line VITC inserted on the SDTV outputs. The 2:3 cadence can be controlled from the VANC data or from the LTC. The 2:3 cadence can also be locked to an external 6 Hz reference where the Afterburner is directly reading the HD Film Footage Encoder output.

In 'video mode' the Afterburner reads the LTC or RP188 ancillary timecode (ATC) and makes burn-in windows and new timecode that is in sync with the downconverted video. The original 24 Fps timecode numbers can be placed in the user bits of the VITC and displayed as a burned-in window. The 2:3 cadence can be controlled from the input video timecode, or by applying a 6 Hz reference pulse.

The HDSD9155Q can be easily configured using version 3 of Evertz popular KeyLog TRACKER™ software (included). The Tracker graphical interface software allows the user to store multiple configurations for the HDSD9155Q. For stand alone applications the Afterburner can also be controlled from the local front panel using the built-in on screen menu system.

Features & Benefits

HDTV Video Inputs:
- Accepts 1.5 Gb/s SMPTE 292M or dual link SMPTE 372M 1080i/60, 1080i/59.94, 1080i/50, 1080p/30sF, 1080p/29.97sF, 1080p/25sF, 1080p/24sF, 1080p/23.98sF, 720p/60, and 720p/59.94 serial digital video
- Downconverter mode - downconverts HDTV input to SDTV and creates VITC and window burns on SDI and analog outputs
- HDTV mode - creates window burns on HDSDI outputs
- Converts 4:4:4 RGB dual link HDSDI to 4:2:2 HDSDI or downconverts to SDI
- Reads RP215 VANC film transfer information in 'Film mode' and generates RP201 3-line VITC on SDTV outputs
- Reads RP188 ancillary timecode in 'Video mode' and generates SMPTE 12M VITC on SDTV outputs
- Decodes Panasonic 'active picture flags' in ATC user bits for downconverting 720P video.
- Creates 2:3 pulldown when downconverting 1080p/23.98sF video to 525i/59.94 and NTSC.
- 2:3 cadence is determined from a 6Hz pulse input, RP188 timecode or LTC
- High quality downconverter converts aspect ratio from 16:9 to 4:3 in anamorphic, letterbox or centre crop mode
- Embedded audio from input video delayed and reinserted on outputs in time with picture
- Ability to send recovered VANC data to a computer using an RS-232 serial connection or Ethernet.

SDTV Video Inputs: (feature not implemented at time of writing)
- Accepts 270 Mb/s SMPTE 259M-C 525i/59.94 and 625i/50 SDTV serial digital video
- SDTV mode - creates window burns on SDI and analog outputs
- Reads RP201 3-line VITC film transfer information in 'Film mode' and creates window burns of Video, and audio time codes and KeyKode
- Reads SMPTE 12M VITC in 'Video mode' and creates time code window burns
- Embedded audio from input delayed and reinserted on outputs in time with picture

General:
- LTC timecode reader and generator converts 24 Fps to 30 Fps and re-times the timecode to the output video
- Built in signal generator to aid in verifying signal path during installation
- Selectable outputs on loss of input video - blue or black with or without characters, or pass input.
- Control from Evertz KeyLog TRACKER™ version 3.0 or later using RS-232 or Ethernet connection (Ethernet control not implemented at time of writing)
- Multiple units can be ganged together using Ethernet - provides a simple way of configuring multiple units (e.g. multi- camera applications) to the same settings.
- Control from integrated front panel using On screen display menus for stand alone applications
- Configurable virtual slate uses double height character windows to enhance visibility of important information

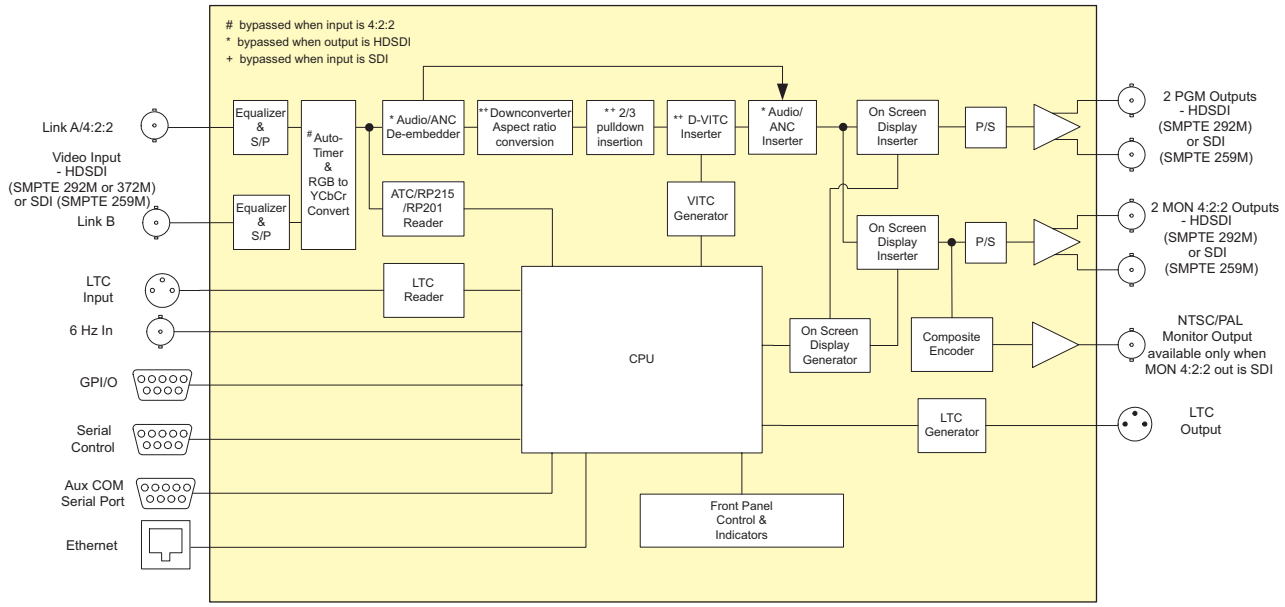

Specifications

Standard:

HDTV Mode	4:2:2 HDTV serial digital (SMPTE 292M) 1.485 Gb/s or 4:4:4 RGB dual link HDTV serial digital (SMPTE 372M) 1080i/60, 1080i/59.94, 1080i/50, 1080p/29.97sF, 1080p/30sF, 1080p/25sF, 1080p/24sF, 1080p/23.98sF and 720p/59.94 - selectable or autodetect
SDTV Mode	4:2:2 SDTV serial digital 270 Mb/s (SMPTE 259M-C) 525i/59.94 and 625i/50 - selectable or autodetect (feature not implemented at time of writing)
Connector:	BNC per IEC 60169-8 Amendment 2
Equalization:	Automatic to 300m @ 270Mb/s with Belden 8281 or equivalent cable Automatic to 130m @ 1.5Gb/s with Belden 1694 or equivalent cable
Embedded Audio:	SMPTE272M or SMPTE 299M - supports up to 4 groups

Serial Digital Video Output

Standards:	Same as input or 4:2:2 serial component 270 Mb/s (SMPTE 259M-C) 525i/59.94 if output is 720p/59.94, 1080i/59.94 1080p/23.98sF 625i/50 if input is 1080i/50
Connector:	BNC per IEC 60169-8 Amendment 2
Number:	2 program, 2 monitor
Embedded Audio:	SMPTE 272M or SMPTE299M - up to 4 groups transferred from input video
Signal Level:	800mV nominal
DC Offset:	0V ±0.5V
Rise and Fall Time:	200ps (HD) or 470ps (SD) nominal
Overshoot:	<10% of amplitude
Return Loss:	> 15 dB
Wide Band Jitter:	< 0.2 UI

LTC Generator

Standard:	SMPTE 12M
Frame Rate:	25 and 30 Fps nominal
Connector:	3 pin male XLR type connector.
Level:	Adjustable, 0.5V to 4.5V p-p

LTC Reader

Standard:	SMPTE 12M
Frame Rate:	24, 25 and 30 Fps nominal
Connector:	3 pin female XLR type connector
Level:	0.2 to 4V p-p, balanced or unbalanced

Analog Monitor Video Output

Standards:	Inactive if MON 4:2:2 outputs are HD video rate Analog composite NTSC if MON 4:2:2 outputs are 525i/59.94 Analog composite PAL if MON 4:2:2 outputs are 625i/50
Connector:	BNC per IEC 60169-8 Amendment 2
Number of outputs:	1 monitor
Signal Level:	1 V p-p nominal, internally adjustable
DC Offset:	0V ±0.1V
Return Loss:	>35dB up to 5 MHz
Frequency Resp:	0.8dB to 4 MHz
Differential Phase:	<0.9?(<0.6? typical)
Differential Gain:	<0.9% (<0.5 % typical)
SNR:	>56dB to 5 MHz (shallow ramp)
Impedance:	75Ω

VITC Reader **(not implemented at time of writing)**

Standard:	SMPTE 12M or RP201, 3 line VITC
Line Select:	Autodetect valid line or manual insertion

VITC Generator

Standard:	SMPTE 12M or RP201 (3 line VITC)
Line Select:	525i/59.94 10-20 625i/50 6-21

Ancillary Data Reader

Standard:	SMPTE RP188 Ancillary Time code or RP215 Film Transfer Data
Line Select:	Autodetect valid lines in vertical interval
Frame Rate:	24, 25 and 30 Fps nominal

Ethernet

Network Type:	Fast Ethernet 100 Base-TX IEEE 802.3u standard for 100 Mbps baseband CSMA/CD local area network Ethernet 10 Base-T IEEE 802.3 standard for 10 Mbps baseband CSMA/CD local area network
Connector:	RJ-45
Function:	Firmware upgrades via FTP, control and monitoring

Serial Communications

Standard:	RS-232, 57600 baud, 8 bits, no parity
Format:	8 data bits, no parity, 2 stop bits
Number or ports:	2
Connector:	9 pin female "D"
Function:	
Serial Control:	Control/monitoring using KeyLog TRACKER™ software
Aux COM:	Transmit VANC data packets, debug monitoring and control

General Purpose Inputs and Outputs

Type:	3 high impedance inputs, with 1M Ω pull up to +5V 2 open collector outputs, 1M Ω pull up to +5V menu selectable functions
Connector:	9 pin female "D"

Physical

Dimensions:	19" W x 1.75" H x 18.75" D. (483mm W x 45mm H x 477mm D)
Weight:	8 lbs. (3.5Kg)

Electrical

Power:	Auto ranging 100-240 VAC 50/60 Hz, 40 Watts, ETL listed. Complies with EU safety directive
EMI/RFI:	Complies with FCC Part 15 Class A, EU EMC Directive

Ordering Information

HDSD9155Q	HD/SD Afterburner with high quality downconverter - includes KeyLog TRACKER™ software version 3

HDSD9045TR

4:4:4/HD/SD VANC Encoder

The HDSD9045TR multi-resolution Film post production system is designed to simplify the management of your film to tape transfers for both 4:4:4 RGB and 4:2:2 YCrCb high definition and 4:2:2 standard definition video. At the heart of the system is the HDSD9045TR VANC Encoder. Under control of the powerful KeyLog TRACKER™ software, the HDSD9045TR VANC Encoder permits the seamless integration of video and audio timecodes, film KeyKode and production information whether you are transferring to 24, 25 or 30Fps high definition video or standard definition video. During the transfer, KeyLog TRACKER™, Evertz telecine logging and configuration management tool logs the relationships between these important parameters and outputs many industry standard interchange file formats for use by off-line editing systems.

In dual link high definition mode, the HDSD9045TR encodes the timecodes, KeyKode and production information into industry standard SMPTE RP215 vertical ancillary (VANC) data packets on the dual link RGB output. In addition, the HDSD9045TR converts the 4:4:4 RGB to a 4:2:2 YCrCb serial output with the VANC data and optional burned in characters for monitoring. The user can also apply one of 5 user programmable look up tables to either output. In 4:2:2 high definition mode the HDSD9045TR uses the A Link program path for VANC insertion and provides a second 4:2:2 output with VANC and character for offline editing in both HD modes. In standard definition mode, the HDSD9045TR encodes time code and KeyKode into SMPTE RP201 3-line VITC on one SDI output and provides a separate SDI output with burned in characters for offline editing copies. Separate LTC inputs and outputs for the audio and video timecodes, allows handling of mixed rate timecodes. The programmable telecine interface allows the encoder to interface to a wide variety of telecine configurations.

The HDSD9155Q Afterburner is a powerful device designed to facilitate the creation of off-line tapes from the 4:2:2 or 4:4:4 high definition telecine master tapes. The Afterburner downconverts the HDTV input video to SDI and analog standard definition video. When the input video is in the 1080p/24sF format the Afterburner also creates a 2:3 pulldown on the output video to create a 30Fps output. The Afterburner reads the RP215 film transfer data that was encoded by the HDSD9045TR during the telecine transfer and makes burn-in windows. The essential timecode and KeyKode data are also converted into RP201 3-line VITC and output by the Afterburner. The Afterburner automatically generates video timecode for the standard definition VTR that is converted from 24 to 30Fps, and delayed to match the complete 'A' frame cycle of delay through the Afterburner. The HDSD9155Q can also be used to make burn in copies on the native HD or SD video input. (see HDSD9155Q brochure for more information)

The new version 3 of Evertz popular KeyLog Tracker software allows the user to store multiple configurations for both the VANC Encoders and the Afterburners. A simple on screen control in the Tracker software performs switching between 4:4:4 and 4:2:2 HD and SD modes in the HDSD9045TR. Toolbar buttons allow the user to quickly choose which device is being addressed.

Features & Benefits

- Accepts dual link 4:4:4 RGB SMPTE 372M (1.485Gb/s) 1080i/59.94, 1080i/50 1080p/29.97sF, 1080p/25sF and 1080p/23.98sF digital video
- Dual link 4:4:4 RGB SMPTE 372M outputs with RP215 VANC and characters keyed in
- Converts dual link 4:4:4 RGB SMPTE 372M to 4:2:2 YCbCr SMPTE 292M with user programmable color look up tables
- Can be operated in single link 4:2:2 SMPTE 292M or SMPTE 259M mode
- Compatible with REC 709 or Full Scale RGB 4:4:4 color space
- Embedded audio transferred to 4:4:4 and 4:2:2 outputs
- Interfaces to Evertz 5550 or 5500 KeyKode Reader
- Separate LTC reader and generator for video and audio time codes operating at 30, 25 and 24 Fps
- Control from Evertz KeyLog TRACKER™ software (version 3)
- Encodes film transfer information in SMPTE RP215 VANC for HD or SMPTE RP201 3-line VITC for SD
- Character burns and VANC available (VITC on SD video) on program and monitor and 4:2:2 outputs can be independently turned on and off
- Ethernet port for monitoring and control
- Includes KeyLog TRACKER™ Version 3
- Reads RP188 ancillary timecode for video dailies applications

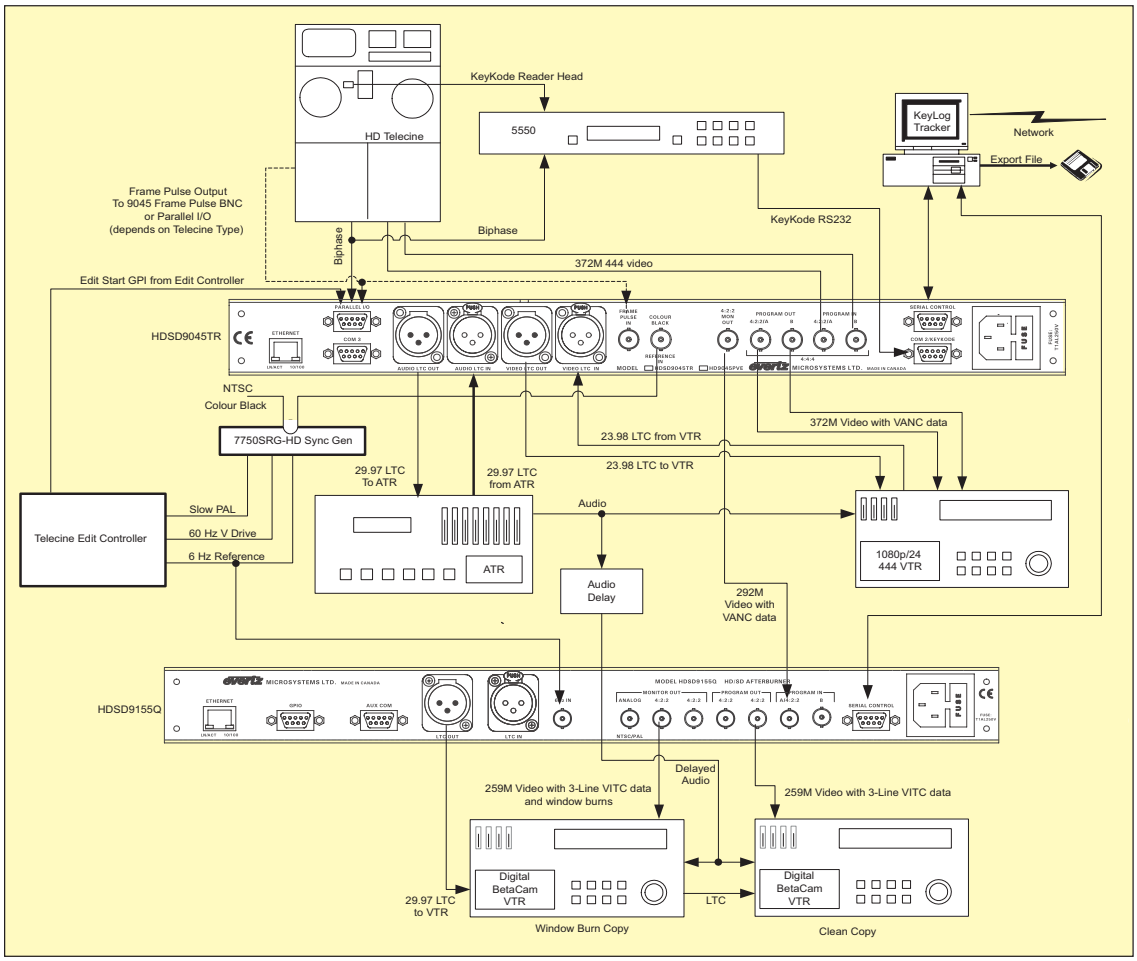

Specifications

Serial Digital Inputs

Standard:	4:4:4 RGB SMPTE 372M or 4:2:2 SMPTE 292M 1.485Gb/s, 1080i/59.94, 1080i/50, 1080p/29.97sF, 1080p/25sF, 1080p/23.98sF SMPTE 259M-C 270Mb/s, 525i/59.94 or 625/50
Connector:	2 BNC per IEC 60169-8 Amendment 2
Equalization:	Automatic to 200m @ 270Mb/s with Belden 8281 Automatic to 75m @ 1.5Gb/s with Belden 1694A

Serial Digital Outputs

Standard:	Same as input
Number of Outputs:	1 dual link or 1 single link (program) 1 4:2:2 monitor
Connectors:	BNC per IEC 60169-8 Amendment 2
Signal Level:	800mV nominal
DC Offset:	0V ±0.5V
Rise and Fall Time:	200ps (HD), 900ps (SD) nominal
Overshoot:	< 10% of amplitude
Wide Band Jitter:	< 0.2UI
Embedded Audio:	SMPTE 272M or SMPTE 292M Supports up to 4 groups

LTC Generators

Standard:	SMPTE 12M
Frame Rate:	24, 25 and 30 Fps nominal
Number of Outputs:	2
Connectors:	3-pin male XLR type
Level:	Adjustable, 0.5V to 4.5V p-p

LTC Readers

Standard:	SMPTE 12M
Frame Rate:	24, 25 and 30 Fps nominal
Number of Inputs:	2
Connectors:	3-pin female XLR type
Level:	0.2 to 4V p-p, balanced or unbalanced

Serial Remote Control

Standard:	RS-232, 57600 baud
Connector:	9-pin female "D"
Control:	Computer control of all functions, firmware upgrade

KeyKode Reader Port

Standard:	RS-232; 38400 or 9600 baud
Connector:	9-pin female "D"
Protocol:	Evertz 5550, 5500 KeyKode Decoder

Telecine Interface

Connector:	9-pin female "D"
Tach Input:	Bi-phase quadrature pulses - 1,2,5, or 10 x film rate, TTL level
Frame Pulse:	
Cintel:	> 1.6V p-p active low, 1 pulse per film frame, (BNC per IEC 60169-8 Amendment 2)
GVG/Thomson:	TTL level SOF, 1 edge per film frame (9-pin female D)
Sony:	> 1.6V p-p active high, 1 pulse per film frame (BNC per IEC 60169-8 Amendment 2)

GPIO Interface

Connector:	9-pin female "D"
Type:	Opto-isolated bi-directional I/O - TTL level
Number:	5
Function:	User-programmable

Ethernet

Network Type:	Fast Ethernet 100 Base-TX IEEE 802.3u standard for 100 Mbps baseband CSMA/CD local area network Ethernet 10 Base-T IEEE 802.3 standard for 10 Mbps baseband CSMA/CD local area network
Connector:	RJ-45
Function:	Firmware upgrades via FTP, control and monitoring

Physical

Dimensions:	19" W x 1.75" H x 18.75" D. (483mm W x 45mm H x 477mm D)
Weight:	8lbs (3.5kg)

Electrical

Power:	Auto ranging 100 to 240V AC 50/60Hz, 40W
Safety:	ETL listed Complies with EU safety directive
EMI/RFI:	Complies with FCC Part 15 Class A, EU EMC Directive

Ordering Information

HDSD9045TR	4:4:4/HD/SD VANC Encoder including KeyLog™ Tracker
HDSD9045TR/5550/UV-3	4:4:4/HD/SD VANC Encoder system including KeyLog Tracker™, KeyKode Decoder & UV-3 Head

HD9045PVE

4:4:4 Production VANC Encoder

The HD9045PVE Production VANC Encoder is designed to simplify the management of your high definition video acquired production material for both 4:4:4 RGB and 4:2:2 YCrCb high definition video. Under control of the powerful KeyLog TRACKER™ software, the HD9045PVE Production VANC Encoder permits the seamless integration of video and audio timecodes, and production metadata such as camera, lens and dolly information, scene, take and roll numbers. During acquisition or after during an editorial dubbing process, KeyLog TRACKER™, Evertz logging and configuration management tool logs the essential metadata along with the relationships between the source and record timecodes, and outputs many industry standard interchange file formats for use by off-line editing systems.

The HD9045PVE encodes the timecodes and production metadata into industry standard vertical ancillary (VANC) data packets on the dual link RGB output. In addition the HD9045PVE converts the 4:4:4 RGB to a 4:2:2 YCrCb serial output with the VANC data and optional burned in characters for monitoring. The user can also apply one of 5 user programmable look up tables to either output. Separate LTC inputs and outputs for the audio and video timecodes, allows handling of mixed rate timecodes.

The HDSD9155Q Afterburner is a powerful device designed to facilitate the creation of off-line tapes from high definition telecine master tapes. The Afterburner downconverts the HDTV input video to SDI and analog standard definition video.

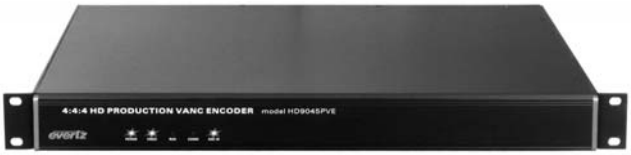

When the input video is in the 1080p/24sF format the Afterburner also creates a 2:3 pulldown on the output video to create a 30Fps output. The Afterburner reads the ancillary data that was encoded by the HD9045PVE and makes burn-in windows. The essential timecodes are also converted into RP201 3-line VITC and output by the Afterburner. The Afterburner automatically generates video timecode for the standard definition VTR that is converted from 24 to 30Fps, and delayed to match the complete 'A' frame cycle of delay through the Afterburner. The HDSD9155Q can also be used to make burn-in copies on the native HD video input.

The new version 3 of Evertz popular KeyLog TRACKER™ software allows the user to store multiple configurations for the HD9045PVE. A simple on screen control in the Tracker software performs switching between 4:4:4 and 4:2:2 modes in the HD9045PVE. Toolbar buttons allow the user to quickly choose which device is being addressed.

Features & Benefits

- Accepts dual link 4:4:4 RGB SMPTE 372M (1.485Gb/s) 1080i/59.94, 1080i/50 1080p/29.97sF, 1080p/25sF and 1080p/23.98sF digital video
- Dual link 4:4:4 RGB SMPTE 372M outputs with VANC & characters keyed in
- Converts dual link 4:4:4 RGB SMPTE 372M to 4:2:2 SMPTE 292M with user-programmable color look up tables
- Can be operated in single link 4:2:2 SMPTE 292M mode
- Separate LTC reader and generator for video and audio time codes operating at 30, 25 and 24 Fps
- Control from Evertz KeyLog TRACKER™ software
- Encodes production timecodes and metadata information in modified SMPTE RP215 VANC
- Character burns available on 4:4:4 and 4:2:2 outputs - can be independently turned on and off
- 3 serial ports to collect production metadata from lens and camera dolly

HD9045PVE Typical Application

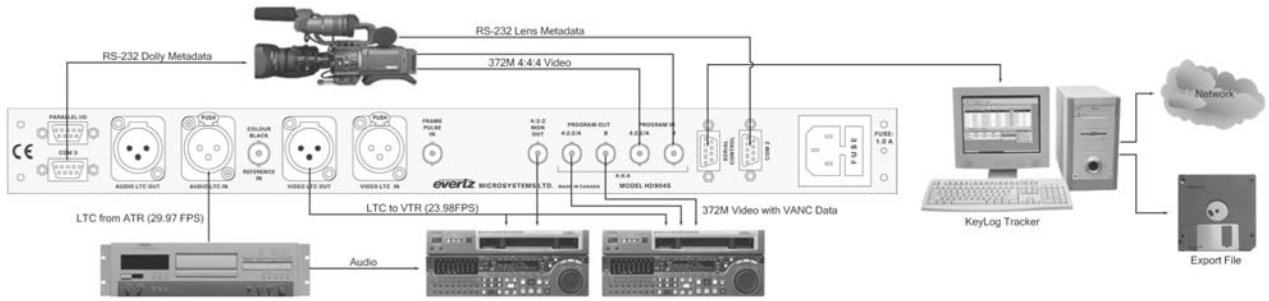

Specifications

Serial Digital Inputs:

Standard:	4:4:4 RGB SMPTE 372M or 4:2:2 SMPTE 292M 1.485Gb/s, 1080i/59.94, 1080i/50, 1080p/29.97sF, 1080p/25sF, 1080p/23.98sF
Connector:	2 BNC per IEC 60169-8 Amendment 2
Equalization:	Automatic to 200m @ 270Mb/s with Belden 8281 Automatic to 75m @ 1.5Gb/s with Belden 1694A

Serial Digital Outputs:

Standard:	Same as input
Number of Outputs:	1 dual link or 2 single link (program) 1 4:2:2 monitor
Connectors:	BNC per IEC 60169-8 Amendment 2
Signal Level:	800mV nominal
DC Offset:	0V ±0.5V
Rise and Fall Time:	200ps nominal
Overshoot:	< 10% of amplitude
Wide Band Jitter:	< 0.2 UI

LTC Generators:

Standard:	SMPTE 12M
Frame Rate:	24, 25 and 30 Fps nominal
Number of Outputs:	2
Connectors:	3-pin male XLR type
Level:	Adjustable, 0.5V to 4.5V p-p

LTC Readers:

Standard:	SMPTE 12M
Frame Rate:	24, 25 and 30 Fps nominal
Number of Inputs:	2
Connectors:	3-pin female XLR type
Level:	0.2 to 4V p-p, balanced or unbalanced

Serial Remote Control:

Standard:	RS-232, 57600 baud
Connector:	9-pin female "D"
Control:	Computer control of all functions, firmware upgrade

MetaData Communications Ports:

Standard:	RS-232; 38400 or 9600 baud
Connector:	9-pin female "D"
Number of Ports:	2
Protocol:	Fujinon Lens Protocol compatible

Physical:

Dimensions:	19" W x 1.75" H x 18.75" D. (483mm W x 45mm H x 477mm D)
Weight:	8lbs (3.5kg)

Electrical:

Power:	Auto ranging 100 to 240V AC 50/60Hz, 40W
Safety:	ETL listed Complies with EU safety directive
EMI/RFI:	Complies with FCC Part 15 Class A, EU EMC Directive

Ordering Information

HD9045PVE	4:4:4 HD Production VANC Encoder including KeyLog™

The Evertz Film Post Production System helps you keep track of all aspects of your Film-to-Tape Transfer session.

KEYLOG TRACKER™ is an intuitive graphical user interface that provides more flexibility to the Evertz Film Post Production System than ever before. KeyLog TRACKER™ runs on standard Window capable computer hardware and gives you access to a host of new capabilities for the system including more character windows, simultaneous KeyKode and Ink number handling and several new Time code modes to mention a few.

The Evertz HD/SD film Post Production System uses function specific hardware units such as the HDSD9045TR Film Footage Encoder, the 5550 KeyKode Reader and the new HDSD9155Q Afterburner Inserter to perform the bulk of the real time processing. This dedicated hardware reads and generates Video Time code, reads KeyKode and Film Time code, inserts ancillary data or Vertical Interval Time code and character burn-ins into HDSDI or SDI program video, and keeps track of the 3:2 pulldown.

KEYLOG TRACKER™ centralizes the control of your Film Footage Encoder, and Afterburner and performs frame accurate logging of Video and Audio Time code, KeyKode, Ink numbers, 3:2 pulldown and related production data and provides extensive data base management capabilities for the resulting project data.

Character Windows

KEYLOG TRACKER™ gives you access to 33 separate character windows to display Video Time code, Audio Time code, KeyKode, Ink numbers (feet & frames), Scene, Take, Slate, Lab roll, Camera roll, Sound roll, Date of Production, and three 32 character user definable text windows.

An electronic virtual slate shows all the vital information at the start of each take, for master transfers where you cannot display the normal burn-ins throughout the take.

The status bar at the bottom of the screen allows you to see at a glance how your hardware is configured. In addition, the Encoder Status window constantly monitors KeyKode reading performance, incoming Time codes and other real time status information.

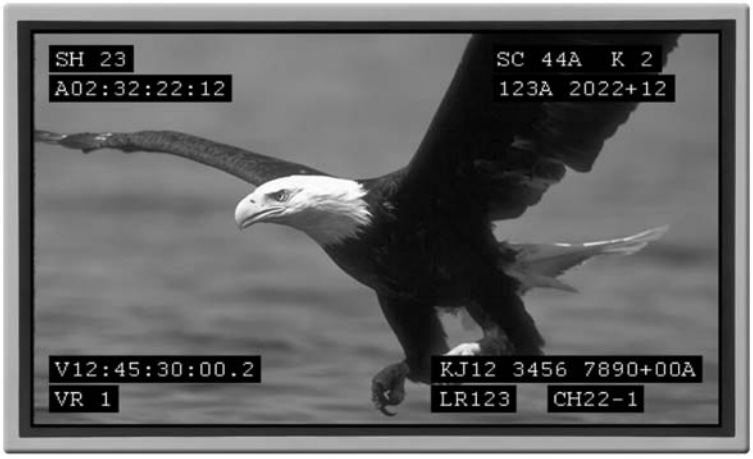

Flexible Hardware Control

KEYLOG TRACKER™ works with Evertz complete line of film footage encoders and HD Afterburners. With KEYLOG TRACKER™'s graphical configuration editor you choose the overall operating mode that fits your project. Within each mode you can adjust various hardware settings to achieve precisely the result your clients demand. An unlimited number of configurations can be saved and recalled, minimizing set up times for repeat clients and virtually eliminating operator error. A project's configuration is automatically recalled when the project is opened.

Data Logging

KEYLOG TRACKER™ allows you to choose the optimal method of logging transfer elements to the database. You let the project determine whether you will log only the head and tail of each roll for one light transfers, grab KeyKode or time code breaks for select take rolls, grab events on the fly from the keyboard, or interface to external edit controllers with the GPI interface.

Pre-determined tag points can be entered into Daily Roll files to automate data capture on Synced Print transfers. Production data such as Scene and Take, Camera roll, Sound roll can be pre-entered before the telecine session to streamline the transfer process, or can be entered in real time during the transfer.

Data Management Functions

KEYLOG TRACKER™'s extensive data management capabilities are second to none. Projects can be organized by client, or production, or by operator - you decide. The spreadsheet style preview and editing of logged events allows you to quickly scan the transfer session and edit the database. Project wide viewing and sorting of events facilitates management of data on long form productions such as feature films. Reports can be sorted by VT roll, Camera roll, Scene/Take, KeyKode or Ink numbers to name a few.

The Event Tracker allows you to trim time codes, KeyKode and Ink numbers of in and out points together. Event cleanup functions remove unwanted events and overlaps from the list. KEYLOG TRACKER generates Film Transfer list files compatible with most non linear editors.

- KEYLOG FTL, AVID ALE, TLC FLEx and Lightworks ODB formats are supported.

Desktop Configurability

The KEYLOG TRACKER™ desktop groups relevant information into separate windows, which can be positioned and sized to suit the colorist's preferences. A spreadsheet style display of logged events is fully configurable to view only the information that is needed for a client. Each user can save their favorite layout of the desktop when the system is shared by multiple colorists.

Minimum System Requirements

- CPU: Pentium III
- Operating System: Win2000, WinXP Pro
- RAM: 256MB or more recommended
- Mouse
- Video: 2MB, 800x600 minimum
- CD-ROM
- Hard Disk: 20MB free
- Serial Ports: 2 available
- Local or network printer for printing reports (recommended)
- Sound card with speakers used to generate system sounds when logging (recommended)
- 10/100 Ethernet (recommended)

Ordering Information

Included with 9025TR & 9045TR Series Film Footage Encoders and HDSD9155Q Afterburner.
Upgrades available for older systems. Contact factory.

Product Index

1200DD	2 RU Rack-mount Digital Display	422
1201DD	1 RU Rack-mount Digital Display	422
1212	12" Diameter Analog Clock Display	423
1216	16" Diameter Analog Clock Display	423
1212L	12" Diameter Analog Clock Display With Back Lighting	423
1216L	16" Diameter Analog Clock Display With Back Lighting	423
1275A-110	9" Digital Clock 115V/60Hz	424
1275A-220	9" Digital Clock 220V/50Hz	424
2400PSUA-4	Outdoor, quad output power supply for 2407LTA series	449
2405EO3F-HD	HD Miniature Optical Transmitter 1310nm, FP Laser	226, 442
2405EO3D-HD	HD Miniature Optical Transmitter 1310nm, DFB Laser	226, 442
2405EO5D-HD	HD Miniature Optical Transmitter 1550nm, DFB Laser	226, 442
2405EOxx-HD	HD Miniature Optical Transmitter CWDM DFB Laser	226, 442
2405EO3F	SDI Miniature Optical Transmitter 1310nm FP, Laser	200, 440
2405EO5D	SDI Miniature Optical Transmitter 1550nm DFB Laser	200, 440
2405EOxx	SDI Miniature Optical Transmitter CWDM DFB Laser	440
2405LTA	L-Band Standalone/Weatherproof Fiber Transmitter	448
2405OE-HD	HD Miniature Optical Receiver, 19.4Mb/s to 1.5Gb/s	443
2405OE	SDI Miniature Optical Receiver, 19.4Mb/s or 143-540Mb/s	441
2407DVIT13	DVI Fiber Transmitter, 1310nm FP	444-445
2407DVIT13-A2	DVI + 2 Analog Audio Fiber Transmitter, 1310nm FP	444-445
2407DVIT13-A2KM-F2	DVI/KVM + 2 Analog Audio + Bi-di Keyboard and Mouse Fiber Transmitter, dual fiber, 1310nm TX & RX	444-445
2407DVIT13-A2KM-USB-F2	DVI/KVM + 2 Analog Audio + Bi-di Keyboard Mouse and USB Fiber Transmitter, dual fiber, 1310nm TX & RX	444-445
2407DVIT15-A2KM-W	DVI/KVM + 2 Analog Audio + Bi-di Keyboard Mouse Fiber Transmitter, single fiber, 1550nm TX, RX on 1310nm	444-445
2407DVIT15-A2KM-USB-W	DVI/KVM + 2 Analog Audio + Bi-di Keyboard and Mouse and USB Fiber Transmitter, single fiber, 1550nm TX, RX on 1310nm	444-445
2407DVITxx	DVI Fiber Transmitter, CWDM Laser	444-445
2407DVITxx-A2	DVI + 2 Analog Audio Fiber Transmitter, CWDM Laser	444-445
2407DVITxx-A2KM-F2	DVI/KVM + 2 Analog Audio + Bi-di Keyboard and Mouse Fiber Transmitter, dual fiber, CWDM Laser	444-445
2407DVITxx-A2KM-USB-F2	DVI/KVM + 2 Analog Audio + Bi-di Keyboard Mouse and USB Fiber Transmitter, dual fiber, CWDM Laser	444-445
2407DVIR	DVI Fiber Receiver	446-447
2407DVIR-A2	DVI + 2 Analog Audio Fiber Receiver	446-447
2407DVIR13-A2KM-F2	DVI/KVM + 2 Analog Audio + Bi-di Keyboard and Mouse Fiber Receiver, dual fiber, 1310nm TX & RX	446-447
2407DVIR13-A2KM-USB-F2	DVI/KVM + 2 Analog Audio + Bi-di Keyboard Mouse and USB Fiber Receiver, dual fiber, 1310nm TX & RX	446-447
2407DVIR15-A2KM-W	DVI/KVM + 2 Analog Audio + Bi-di Keyboard Mouse Fiber Receiver, single fiber, 1550nm TX, RX on 1310nm	446-447
2407DVIR15-A2KM-USB-W	DVI/KVM + 2 Analog Audio + Bi-di Keyboard and Mouse and USBFiber Receiver, single fiber, 1550nm TX, RX on 1310nm	446-447
2407DVIRxx-A2KM-F2	DVI/KVM + 2 Analog Audio + Bi-di Keyboard and Mouse Fiber Receiver, dual fiber, CWDM Laser	446-447
2407DVIRxx-A2KM-USB-F2	DVI/KVM + 2 Analog Audio + Bi-di Keyboard Mouse and USB Fiber Receiver, dual fiber, CWDM Laser	446-447
2407LTA	L-Band Standalone/Weatherpprof Fiber Transmitter with AGC	448
2407RGBT13	RGBHV/DVI Fiber Transmitter, 1310nm FP	450-451
2407RGBT13-A2	RGBHV/DVI + 2 Analog Audio Fiber Transmitter, 1310nm FP laser	450-451
2407RGBT13-A2KM-F2	RGBHV/DVI/KVM + 2 Analog Audio + Bi-di Keyboard and Mouse Fiber Transmitter, dual fiber, 1310nm TX & RX	450-451
2407RGBT13-A2KM-USB-F2	RGBHV/DVI/KVM + 2 Analog Audio + Bi-di Keyboard and Mouse and USB Fiber Transmitter, dual fiber, 1310nm TX & RX	450-451
2407RGBT15-A2KM-W	RGBHV/DVI/KVM + 2 Analog Audio + Bi-di Keyboard and Mouse Fiber Transmitter, single fiber, 1550nm TX, RX on 1310nm	450-451
2407RGBT15-A2KM-USB-W	RGBHV/DVI/KVM + 2 Analog Audio + Bi-di Keyboard and Mouse and USB Fiber Transmitter, single fiber, 1550nm TX, RX on 1310nm	450-451
2407RGBTxx	RGBHV/DVI Fiber Transmitter, CWDM DFB laser	450-451
2407RGBTxx-A2	RGBHV/DVI + 2 Analog Audio Fiber Transmitter, CWDM DFB laser	450-451
2407RGBTxx-A2KM-F2	RGBHV/DVI/KVM + 2 Analog Audio + Bi-di Keyboard and Mouse Fiber Transmitter, dual fiber, CWDM DFB laser	450-451
2407RGBTxx-A2KM-USB-F2	RGBHV/DVI/KVM + 2 Analog Audio + Bi-di Keyboard and Mouse and USB Fiber Transmitter, dual fiber, CWDM DFB laser	450-451
2407RGBR	RGBHV/DVI Fiber Receiver	452-453
2407RGBR-A2	RGBHV/DVI + 2 Analog Audio Fiber Receiver	452-453
2407RGBR13-A2KM-F2	RGBHV/DVI/KVM + 2 Analog Audio + Bi-di Keyboard and Mouse Fiber Receiver, dual fiber, 1310nm TX & RX	452-453
2407RGBR13-A2KM-USB-F2	RGBHV/DVI/KVM + 2 Analog Audio + Bi-di Keyboard and Mouse + USB, Fiber Receiver, dual fiber, 1310nmTX & RX	452-453
2407RGBR13M-A2KM-W	RGBHV/DVI/KVM + 2 Analog Audio + Bi-di Keyboard and Mouse Fiber Receiver, single fiber, 1310nm RX, TX on 1550nm	452-453
2407RGBR13M-A2KM-USB-W	RGBHV/DVI/KVM + 2 Analog Audio + Bi-di Keyboard and Mouse + USB Fiber Receiver, single fiber, 1310nm RX, TX on 1550nm	452-453
2407RGBRxx-A2KM-F2	RGBHV/DVI/KVM + 2 Analog Audio + Bi-di Keyboard and Mouse Fiber Transmitter, dual fiber, CWDM DFB laser	452-453
2407RGBRxx-A2KM-USB-F2	RGBHV/DVI/KVM + 2 Analog Audio + Bi-di Keyboard and Mouse and USB Fiber Transmitter, dual fiber, CWDM DFB laser	452-453
2410MD-HSN	HD Miniature Monitoring Downconverter with 24sF processing (with power supply)	456
2430DAC-HD	HDTV Miniature D to A: YPrPb/RGB/VGA via High Density DB-15 (with power supply)	454
2430GDAC	G-LINK to DVI converter. Required for every G-LINK output of PPMG and PPMV+G output processor card	455
2430GDAC-WARP	G-LINK to DVI converter with WARP	455
3000MVP-GI	Dual (2) or Quad (4) computer video inputs per input module	33
3000MVP-AI	Monitor up to 4 analog pairs or 4 AES/EBU audio channels per video input	33
3000BHP-U	1RU breakout bulkhead panel to support either balanced stereo analog inputs or balanced AES/EBU audio	33
3000BHP-BAL	2RU breakout bulkhead panel to support either balanced stereo analog inputs or balanced AES/EBU audio	33
3000BHP-AUX	Breakout bulkhead panel for GPI/O, LTC input and serial communications	33
3000MKT-AUX	Rackmount panel for AUX breakout board	33
3000DCP	Allows you to change your display's presets from numerous possibilities	33
3000MVP-OE/EO-5	P-LINK™/G-LINK™ Optical to Electrical/Electrical to Optical converter	33
3410	Multivert (10 SDI to Analog Monitoring Converter)	419
3400RS	Rear support kit	423
400FR	Compact High Density Balanced Audio Distribution Frame	308
400ADA-AUD	Analog Audio Distribution Amplifier (1x9)	309
400DA-AESB	Balanced AES Audio Distribution Amplifier (1x9)	310
400DA2Q-AESB	Dual Balanced AES Audio Distribution Amplifier	311
500AC02-HD/SD	Dual HD & SD Digital Video Signal 2 x 1 Change Over	321
500ADA	Analog Video Distribution Amplifier (1x9)	328
500ADA-AUD	Analog Audio Distribution Amplifier (1x4)	334
500ADA-EQ	Analog Video Distribution Amplifier with Cable Equalization (1x9)	329
500ADA-EQ-L	Analog Video Distribution Amplifier with Cable Equalization for Looping Analog Frame	318
500ADA-W	Word Clock Distribution Amplifier (1x9)	335
500AMDA-AESU	Unbalanced AES Audio DAC & Distribution Amplifier	333
500DA	SDI Reclocking Distribution Amplifier - (1x9)	324
500DA-3G	3Gb/s SDI Reclocking Distribution Amplifier (1x8)	326
500DA2Q	SDI Dual Reclocking Distribution Amplifier (2 - 1x4)	325
500DA2Q-AESU	Unbalanced Dual AES Audio Distribution Amplifier (2- 1x4)	332
500DA2Q-HD	Combo HD/SD SDI Dual Reclocking Distribution Amplifier (2 - 1x4)	320
500DA-AESB	Balanced AES Audio Distribution Amplifier (1x4)	3330
500DA-AESU	Unbalanced AES Audio Distribution Amplifier (1x9)	331
500DA-L	Reclocking Distribution Amplifier for Digital Looping Frame	316
500DCDA-HD	HD Downconverter & Distribution Amplifier with closed caption monitoring	322-323
500DA-HD	HD/SD Reclocking Distribution Amplifier (1x8)	319
500DA-HD-L	Reclocking Distribution Amplifier for Digital Looping Frame	317
500FC-DA-HD	Combo HD/SD SDI Reclocking Distribution Amplifier (1x8)	315
500FC	VistaLINK® Frame Controller	314

500FR	Compact High Density Distribution Frame	312
500LR-L-A	Compact High Density Analog Looping Distribution Frame	313
500FR-L-D	Compact High Density Digital Looping Distribution Frame	313
500VMDA	SDI Monitoring Reclocking Distribution Amplifier	327
520AD4-HD	HD/SD Audio De-embedder with 4 unbalanced AES outputs (2 audio groups)	340
520AD4-DD-HD	HD/SD Audio De-embedder & Dolby E/AC-3 Decoder & Re-embedder	338-339
520AD8-HD	HD/SD Audio De-embedder with 8 unbalanced AEs outputs (4 audio groups)	342
520AE4-HD	HD/SD Audio Embedder with 4 unbalanced AES inputs (2 audio groups)	341
520AE8-HD	HD/SD Audio Embedder with 8 unbalanced AES inputs (4 audio groups)	343
520DD-AESU	Dolby E Decoder	337
520DARS-W	Unbalanced AES Word Clock Extractor Audio Distribution Amplifier	336
5010	Time Code Generator/Reader	426-427
5010-24Fps	NTSC/24Fps Time Code Generator/Reader	426-427
5010-GPSII	Time Code Generator with GPSII	425
5010-VITC	Time Code Generator/Reader with VITC	426-427
5010-VITC-24Fps	NTSC/24Fps Time Code Generator/Reader with VITC	426-427
5010-VITC-GPSII	VITC Time Code Generator with GPSII	425
5300	Time Code Analyzer	428
5550	Universal Decoder	468-469
5550/KR-16/35	5550 Decoder with KR16/35 Head & 10 ft. cable	468-469
5550/UV-3	5550 Decoder with UV-3 Head & 20 ft. cable	468-469
5550/UVT-3	5550 Decoder with UVT-3 (touchless) Head & 20 ft. cable	468-469
EV-BRKT	Universal Reader Mounting Bracket	468-469
FDL-SHIMS	Shim kit for BTS, FDL 60/90, Quadra	468-469
CINTEL-SHIM	Shim kit for Cintel C-Reality 16/35 heads	468-469
WA-S19	C-Reality Cable Harness	468-469
WA-F49	50ft extender cable for KR series heads	468-469
WA-P57	50ft extender cable for UV series heads	468-469
KKFILM-16MM	16mm Kodak Keykode Verification Film	468-469
KKFILM-35MM	35mm Kodak KeyKode Verification Film	468-469
KKFILM-S16MM	Super 6mm Kodak KeyKode Verification Film	468-469
5600ACO	Automatic Changeover system complete with 2 power supplies, 2 power cords and 3 DB9 cables	432-433
5600ACO-2	Dual Automatic Changeover system complete with 2 power supplies, 2 power cords and 3 DB9 cables (BNC cables not included)	432-433
5600MSC	Combo Master Sync. Pulse Generator/Master Clock (includes 6 Black Burst/Tri-level Sync outputs)	430-431
5950	VITC/LTC Timecode Reader/Character Inserter	429
7700ACO-HD	HD/SD SDI 8 Channel AES & RS232/RS422 Auto Changeover	78
7700ADA6-L	Analog Video Distribution Amplifier with Loop Thru	89
7700ADA7	Analog Video Equalizing Distribution Amplifier (1X4)	90
7700ADA7-EQ	Analog Video Equalizing Distribution Amplifier (1X7)	92
7700ADA-AUD	Dual Analog Audio Distribution Amplifier	93
7700ADA-AUD-MM	Dual Analog Audio Distribution Amplifier with Mono Mix	94
7700ADA-EQ	Analog Video Equalizing Distribution Amplifier	91
7700ADA6-EQ-L	Equalizing Analog Video Distribution Amplifier with Loop Thru	88
7700ADA-ETSI	High Amplitude Analog Distribution Amplifier (1x4)	95
7700DA	143-540Mb/s, DVB-ASI, SMPTE 310M Reclocking Distribution Amplifier (1x4)	82
7700DA-N	143-540Mb/s, DVB-ASI, SMPTE 310M, M2S Non-reclocking Distribution Amplifier (1x4)	82
7700DA6-L	SD-SDI Reclocking Distribution Amplifier with Loop Thru	83
7700DA7	HD/SD SDI Reclocking DA, 7 output	84
7700DA6-HD-L	HD/SD SDI Reclocking Distribution Amplifier with Loop Thru	75
7700DA7-HD	HD SDI reclocking DA, 4 outputs	76
7700DA8-HD	HD SDI reclocking Distribution Amplifier, 8 outputs	77
7700DA-AESB	Autoequalizing Balanced AES/EBU Distribution Amplifier	86
7700DA-AESU	Autoequalizing unbalanced AES/EBU Distribution Amplifier	85
7700DA-AES-RJ	Auto Equalizing Balanced AES/EBU Distribution Amplifier over CAT 5 Cable	87
7700DA-DS3	DS3 Distribution Amplifier	80
7700DA-E3	E3 Distribution Amplifier	81
7700DA-HD	HD SDI Reclocking Distribution Amplifier, 4 outputs	77
7700FC	VistaLINK® Frame Controller (includes VLPRO-C, VistaLINK® PRO S/W configuration Tool)	66
7700FR-C	3RU Multiframe which holds up to 15 single slot modules with power supply	64
7700PS	Additional power supply for 7700FR-C	64
7700FR-C-48VDC	3RU Multiframe which holds up to 15 single slot modules with 48DC power supply	64
7700PS-48VDC	Additional power supply for 7700FR-C-48VDC	64
7700FR-CR	3RU Multiframe which holds up to 15 single slot modules without power supply	64
7700GPI	VistaLINK® General Purpose Interface Module	67
7700PCO	AC/DC Power Changeover Unit	457
7700PTX-MVP	PTX which drives UMDs	68
7700PTX-SX	PTX which interfaces with Miranda Press Station	68
7700PTX-XY	PTX which interfaces with Leitch-XY integrator	68
7700PTX-CTP	PTX which interfaces with Ross switcher	68
7700PTX-10XL	PTX which controls 10XL-based routers	68
7700PTX-D28	PTX which controls Datatek D-2800 based router	68
7700PTX-D20	PTX which controls Datatek D-2000 based router	68
7700PTX-RCL	PTX which controls GVC RCL based router	68
7700PTX-NV	PTX which controls NVISION based router	68
7700PTX-VMSI	PTS which controls VMSI based router	68
7700PTX-AP	PTX which controls UMD/tally based router	68
7700PTX-PESA	PTX which controls Pesa protocol based router	68
7700PTS-QUTZ	PTX which controls Quartz based router	68
7700R-SC/SC-4	System Controller , Single Processor	65
7700R2x2-HD	2x2 HD/SD Bypass Protection Router	72-73
7700RD2x2-HD	2x2 HD/SD Bypass Protection Router with Dual HD Downconverter	72-73
7700R2x2-HES	2x2 HD/SD Bypass Protection Router with SoftSwitch™	72-73
7700R4x1-HD	4x1 HD/SD-SDI Modular Router	74
7700TPI	VistaLINK® Third Party Interface Module	69
7700VMDA	Video Monitoring Reclocking DA, 1 channel, 7 outputs	79
7700VMDA-2Q	Video Monitoring Reclocking DA, 2 channels, 3 outputs per channel	79
7701FR	1RU Multiframe which holds up to 3 single or dual slot modules	64
7701PSX	Optional External Redundant Power Supply for 7701FR for existing hardware	64
7701PS	Internal Power Supply for 7701FR (replacement or spare orders only)	64
7702BPX-IF	2 X 1 RF Protection Switch for IF Frequencies	160
7702BPX-LB	2 X 1 RF Protection Switch for L-Band Frequencies	161
7702DA4-RF	10Mhz-3Ghz, RF 1x4 Active Splitter	158
7702DA8-RF	10Mhz-3Ghz, RF 1x8 Active Splitter	159
7702LPS-2	Dual Port LNB Power Inserter	162

Product Index

7702SP2	1x2 Passive Splitter	292
7702SP4	1x4 Passive Splitter	292
7702SP2-LNB	1x2 Passive Splitter, passes LNB power	292
7702SP4-LNB	1x4 Passive Splitter, passes LNB power	292
7703BPX-IF	2x1 RF Protection Switch for IF Frequencies with VistaLINK® monitoring	160
7703BPX-LB	2x1 RF Protection Switch for L-Band Frequencies	161
7703DA4-RF	10Mhz-3Ghz, RF 1x4 Active Splitter,with VistaLINK®monitoring	158
7703DA8-RF	10Mhz-3Ghz, RF 1x8 Active Splitter with VistaLINK® monitoring	159
7703LPS-2	Dual Port LNB Power Inserter with NMP/VistaLINK® support	162
7705CWDM-D4	4 Channel CWDM Demux (1510nm-1570nm)	284-285
7705CWDM-D8	8 Channel CWDM Demux (1470nm-1610nm)	284-285
7705CWDM-D8LB	8 Channel Low Band CWDM Demux (1270nm-1450nm)	284-285
7705CWDM-M4	4 Channel CWDM Mux (1510nm - 1570nm)	284-285
7705CWDM-M8	8 Channel CWDM Mux (1470nm - 1610nm)	284-285
7705CWDM-M8LB	8 Channel Low Band CWDM Mux (1270nm-1450nm)	284-285
7705DS	2:1 Optical Combiner/Splitter (50% + 50%)	286
7705DS-4	Four Channel Optical Splitter	286
7705DS-8	Eight Channel Optical Splitter/Combiner	286
7705DWDM-25-D8	8 Ch Cascadeable DWDM DeMux, 100Ghz spacing, ITU channels C25 to C32	287
7705DWDM-25-M8	8 Ch Cascadeable DWDM Mux, 100Ghz spacing, ITU channels C25 to C32	287
7705DWDM-33-D8	8 Ch Cascadeable DWDM DeMux, 100Ghz spacing, ITU channels C33 to C40	287
7705DWDM-33-M8	8 Ch Cascadeable DWDM Mux, 100Ghz spacing , ITU channels C33 to C40	287
7705EO13	SDI Electrical to Optical Converter, 19.4Mb/s or 143-540Mb/s, 1310nm, FP Laser	194
7705EO13-3	Triple SDI Electrical to Optical Converter, 19.4Mb/s or 143-540Mb/s, 1310nm, FP laser	194
7705EO15	SDI Electrical to Optical Converter, 19.4Mb/s or 143-540Mb/s, 1550nm, DFB Laser	194
7705EO13-HD	HDTV Electrical to Optical Converter, 19.4Mb/s to 1.5 Gb/s, 1310nm, FP Laser	218
7705EO13-HD-L	HDTV Electrical to Optical Converter, 19.4Mb/s to 1.5 Gb/s, 1310nm, DFB Laser	218
7705EO15-HD	HDTV Electrical to Optical Converter, 19.4Mb/s to 1.5 Gb/s, 1550nm, DFB Laser	218
7705IFRA	70/140 Mhz IF Fiber Receiver	267
7705IFTA13	70/140 Mhz IF Fiber Transmitter, 1310nm FP Laser, Medium Haul (<40km)	266
7705LR	L-Band Satellite Fiber Receiver	269
7705LTA13	L-Band Satellite Fiber Transmitter, wide range RF input,1310 nm, up to 40 Km	268
7705MS	Optical Monitoring Splitter (80% + 20%)	291
7705OE	SDI Optical to Electrical Converter, 19.4Mb/s or 143-540Mb/s	199
7705OE-3	Triple SDI Optical to Electrical Converter, 19.4Mb/s or 143-540Mb/s	197
7705OE-HD	HDTV Optical to Electrical Converter, 19.4Mb/s to 1.5 Gb/s	219
7705WDM	Wideband Wavelength Division Multiplexor	291
7705WDM13/15	Wavelength Division Multiplexor	291
7707ADVR	Analog or SDI Video & 4 Analog or 4 AES Audio Fiber Optic Receiver, VistaLINK®	166-167
7707ADVR-NF	Analog or SDI Video & 4 Analog or 4 AES Audio Fiber Optic Receiver, Electrical input only, VistaLINK®	166-167
7707ADVR-HD	Analog, SDI or HD-SDI video & analog/AES audio fiber optic receiver	166-167
7707ADVT13	Analog or SDI Video & 4 Analog or 4 AES Audio Fiber Transmitter, 1310nm FP, VistaLINK®	164-165
7707ADVT15	Analog or SDI Video & 4 Analog or 4 AES Audio Fiber Transmitter, 1550nm DFB Laser, VistaLINK®	164-165
7707ADVT-NF	Analog or SDI Video & 4 Analog or 4 AES Audio Fiber Transmitter, Electrical outputs only, VistaLINK®	164-165
7707ADVTxx	Analog or SDI Video & 4 Analog or 4 AES Audio Fiber Transmitter, CWDM Laser, VistaLINK®	164-165
7707ADVTDxxx	Analog or SDI Video & 4 Analog or 4 AES Audio Fiber Transmitter, DWDM Laser, VistaLINK®	164-165
7707ADVT13-HD	1310nm FP Laser (-7dBm launch power)	164-165
7707ADVT15-HD	1550nm DFB Laser	164-165
7707ADVTxx-HD	Analog, HD-SDI or SDI Video & 4 Analog or 4 AES audio Fiber Transmitter, CWDM Laser, VistaLINK®	164-165
7707ADVTDxxx-HD	Analog, HD-SDI or SDI Video & 4 Analog or 4 AES audio Fiber Transmitter, DWDM Laser, VistaLINK®	164-165
7707AR-8	Eight Channel AES Audio Fiber Receiver Demux, VistaLINK® Monitoring	240
7707AR-8U	Eight Channel Unbalanced AES Audio Fiber Receiver Demux, VistaLINK® Monitoring	240
7707AR-16	Sixteen Channel AES Audio Fiber Receiver Demux, VistaLINK® Monitoring	240
7707AR-A8	Eight Channel Analog Audio Fiber Receiver, Demux VistaLINK® Monitoring	241
7707AR-A12	Twelve Channel Analog Audio Fiber Receiver, Demux VistaLINK® Monitoring	241
7707AT13-8	Eight channel AES Audio Fiber Transmitter Mux , 1310nm FP, VistaLINK®	238
7707AT13-8U	Eight channel AES Unbalanced Audio Fiber Transmitter Mux, 1310nm FP, VistaLINK®, AES on BNC's	238
7707AT13-16	Sixteen channel AES Audio Fiber Transmitter Mux, 1310nm FP, VistaLINK®	238
7707AT15-8	Eight channel AES Audio Fiber Transmitter Mux , 1550nm DFB, VistaLINK®	238
7707AT15-8U	Eight channel AES Unbalanced Audio Fiber Transmitter Mux , 1550nm DFB, VistaLINK®	238
7707AT15-16	Sixteen channel AES Audio Fiber Transmitter Mux , 1550nm DFB, VistaLINK®	238
7707ATxx-8	Eight channel AES Audio Fiber Transmitter Mux, CWDM wavelength, VistaLINK®	238
7707ATxx-8U	Eight channel AES Unbalanced Audio Fiber Transmitter Mux , CWDM wavelength, VistaLINK®	238
7707ATxx-16	Sixteen channel AES Audio Fiber Transmitter Mux, CWDM wavelength, VistaLINK®	238
7707ATDxxx-8	Eight channel AES Audio Fiber Transmitter Mux, DWDM wavelength, VistaLINK®	238
7707ATDxxx-8U	Eight channel AES Unbalanced Audio Fiber Transmitter Mux, DWDM wavelength, VistaLINK®	238
7707ATDxxx-16	Sixteen channel AES Audio Fiber Transmitter Mux , DWDM wavelength, VistaLINK®	238
7707AT13-A8	Eight channel Analog Audio Fiber Transmitter Mux, 1310nm FP, VistaLINK®	239
7707AT15-A8	Eight channel Analog Audio Fiber Transmitter Mux, 1550nm DFB, VistaLINK®	239
7707AT13-A12	Twelve channel Analog Audio Fiber Transmitter Mux , 1310nm FP, VistaLINK®	239
7707AT15-A12	Twelve channel Analog Audio Fiber Transmitter Mux , 1550nm DFB, VistaLINK®	239
7707ATxx-A8	Eight channel Analog Audio Fiber Transmitter Mux , CWDM wavelength	239
7707ATxx-A12	Twelve channel Analog Audio Mux Fiber Transmitter, CWDM wavelength	239
7707ATDxxx-A8	Eight channel Analog Audio Mux Fiber Transmitter, DWDM wavelength	239
7707ATDxxx-A12	Twelve channel Analog Audio Mux Fiber Transmitter, DWDM wavelength	239
7707BPX	2x1 Optical Bypass Protection Switch, VistaLINK®	290
7707CVDRA13-F2	Analog Video + Bi-di RS-232/422 Fiber Receiver, dual fiber, 1310nm TX & RX	170-171
7707CVDRA13-A4-F2	Analog Video + Audio + Bi-di RS-232/422 Fiber Receiver, dual fiber, 1310nm TX & RX	170-171
7707CVDRA13M-W	Analog Video + Bi-di RS-232/422 Fiber Receiver, single fiber, 1310nm TX @0dBm, RX on 1550nm	170-171
7707CVDRA13M-W-A4	Analog Video + Audio + Bi-di RS-232/422 Fiber Receiver, single fiber, 1310nm TX @ 0dBm, RX on 1550nm	170-171
7707CVDRAxx-F2	Analog Video + Bi-di RS-232/422 Fiber Receiver, dual fiber, CWDM Laser	170-171
7707CVDRAxx-A4-F2	Analog Video + Audio + Bi-di RS-232/422 Fiber Receiver, dual fiber, CWDM Laser	170-171
7707CVDRADxxx-F2	Analog Video + Bi-di RS-232/422 Fiber Receiver, dual fiber, DWDM Laser	170-171
7707CVDRADxxx-A4-F2	Analog Video + Audio + Bi-di RS-232/422 Fiber Receiver, dual fiber,	170-171
7707CVDTA13-F2	Analog Video + Bi-di RS-232/422 Fiber Transmitter, dual fiber, 1310nm TX & RX	168-169
7707CVDTA13-A4-F2	Analog Video + Audio + Bi-di RS-232/422 Fiber Transmitter, dual fiber, 1310nm TX & RX	168-169
7707CVDTA15-W	Analog Video + Bi-di RS-232/422 Fiber Transmitter, single fiber, 1550nm TX, RX on 1310nm	168-169
7707CVDTA15-W-A4	Analog Video + Audio + Bi-di RS-232/422 Fiber Transmitter, single fiber, 1550nm TX, RX on 1310nm	168-169
7707CVDTAxx-F2	Analog Video + Bi-di RS-232/422 Fiber Transmitter, dual fiber, CWDM Laser	168-169
7707CVDTAxx-A4-F2	Analog Video + Audio + Bi-di RS-232/422 Fiber Transmitter, dual fiber, CWDM Laser	168-169
7707CVDTADxxx-F2	Analog Video + Bi-di RS-232/422 Fiber Transmitter, dual fiber, DWDM Laser	168-169
7707CVDTADxxx-A4-F2	Analog Video + Audio + Bi-di RS-232/422 Fiber Transmitter, dual fiber, DWDM Laser	168-169
7707CVRA	Analog Video with 4-Channel Analog Audio Fiber Receiver, VistaLINK®	181
7707CVRA-2	Dual Analog Video with 4-Channel Analog Audio Fiber Receiver, VistaLINK®	181

7707CVRA-TRI	Tri Level Sync with 4-Channel Analog Audio Fiber Receiver, VistaLINK®	181
7707CVRA-2-TRI	Dual Tri Level Sync with 4-Channel Analog Audio Fiber Receiver, VistaLINK®	181
7707CVR-4-A16	Quad Analog Video Fiber Receiver, VistaLINK®	182
7707CVT-4-A16	Quad Analog Video Fiber Transmitter 1310nm FP Laser, VistaLINK®	174
7707CVTA13	Analog Video with 4-channel Analog Audio Fiber Transmitter 1310nm FP Laser, VistaLINK®	172-173
7707CVTA13M	Analog Video with 4-channel Analog Audio Fiber Transmitter 1310nm FP Laser (0dBm launch), VistaLINK®	172-173
7707CVTA13-2	Dual Analog Video with 4-channel Analog Audio Fiber Transmitter, 1310nm FP Laser, VistaLINK®	172-173
7707CVTA13M-2	Dual Analog Video with 4-channel Analog Audio Fiber Transmitter, 1310nm FP Laser, (0dBm launch), VistaLINK®	172-173
7707CVTA15	Analog Video with 4-channel Analog Audio Fiber Transmitter 1550nm DFB Laser, VistaLINK®	172-173
7707CVTA15-2	Dual Analog Video with 4-channel Analog Audio Fiber Transmitter, 1550nm DFB Laser, VistaLINK®	172-173
7707CVTAxx	Analog Video with 4-channel Analog Audio Fiber Transmitter CWDM DFB Laser, VistaLINK®	172-173
7707CVTAxx-2	Dual Analog Video with 4-channel Analog Audio Fiber Transmitter CWDM DFB Laser, VistaLINK®	172-173
7707CVTADxxx	Analog Video with 4-channel Analog Audio Fiber Transmitter DWDM DFB Laser, VistaLINK®	172-173
7707CVTADxxx-2	Dual Analog Video with 4-channel Analog Audio Fiber Transmitter DWDM DFB Laser, VistaLINK®	172-173
7707CVTA13-TRI	Tri Level Sync with 4-channel Analog Audio Fiber Transmitter 1310nm FP Laser, VistaLINK®	176-177
7707CVTA13-2-TRI	Dual Tri Level Sync with 4-channel Analog Audio Fiber Transmitter, 1310nm FP Laser, VistaLINK®	176-177
7707CVTA15-TRI	Tri Level Sync with 4-channel Analog Audio Fiber Transmitter 1550nm DFB Laser, VistaLINK®	176-177
7707CVTA15-2-TRI	Dual Tri Level Sync with 4-channel Analog Audio Fiber Transmitter, 1550nm DFB Laser, VistaLINK®	176-177
7707CVTAxx-TRI	Tri Level Sync with 4-channel Analog Audio Fiber Transmitter CWDM DFB Laser, VistaLINK®	176-177
7707CVTAxx-2-TRI	Dual Tri Level Sync with 4-channel Analog Audio Fiber Transmitter CWDM DFB Laser, VistaLINK®	176-177
7707CVTADxxx-TRI	Tri Level Sync with 4-channel Analog Audio Fiber Transmitter DWDM DFB Laser, VistaLINK®	176-177
7707CVTADxxx-2-TRI	Dual Tri Level Sync with 4-channel Analog Audio Fiber Transmitter DWDM DFB Laser, VistaLINK®	176-177
7707DT13M-W	Multi RS232/422 Fiber Data Transceiver, single fiber, WDM, 1310nm FP TX, RX on 1550nm, VistaLINK®	244-245
7707DT13M-W-GPIO	Multi RS232/422 and GPIO Fiber Data Transceiver, single fiber, WDM, 1310nm FP TX, RX on 1550nm, VistaLINK®	244-245
7707DT15-W	Multi RS232/422 Fiber Data Transceiver, single fiber, WDM, 1550nm DFB TX, RX on 1310nm, VistaLINK®	244-245
7707DT15-W-GPIO	Multi RS232/422 and GPIO Fiber Data Transceiver, single fiber, WDM, 1550nm DFB TX, RX on 1310nm, VistaLINK®	244-245
7707DT13-F2	Multi RS232/422 Fiber Data Transceiver, dual fiber, 1310nm FP TX & RX, VistaLINK®	244-245
7707DT13-F2-GPIO	Multi RS232/422 and GPIO Fiber Data Transceiver, dual fiber, 1310nm FP TX & RX, VistaLINK®	244-245
7707DT-xx-F2	Multi RS232/422 Fiber Data Transceiver, dual fiber, CWDM TX	244-245
7707DT-xx-F2-GPIO	Multi RS232/422 and GPIO Fiber Data Transceiver, dual fiber, CWDM TX	244-245
7707DTDxxx-F2	Multi RS232/422 Fiber Data Transceiver, dual fiber, DWDM TX	244-245
7707DTDxxx-F2-GPIO	Multi RS232/422 and GPIO Fiber Data Transceiver, dual fiber, DWDM TX	244-245
7707DVIT	DVI/KVM Fiber Transmitter	188-189
7707DVIR	DVI/KVM Fiber Receiver	190-191
7707EO13	SDI Electrical to Optical Converter 19.4Mb/s or 143-540Mb/s, 1310nm, FP Laser, VistaLINK®	198
7707EO13-3	Triple SDI Electrical to Optical Converter, 19.4Mb/s or 143-540Mb/s, 1310nm FP laser, VistaLINK®	196
7707EO13-3-HD	Triple HD or SD Electrical to Optical Converter, 19.4Mb/s or 143Mb/s-1.485Gb/s, 1310nm FP laser, VistaLINK®	220
7707EO15-3-HD	Triple HD or SD Electrical to Optical Converter, 19.4Mb/s or 143Mb/s-1.485Gb/s, 1550nm DFBlaser, VistaLINK®	220
7707EO13-DS3	DS3 Electrical to Optical Converter, VistaLINK®, 1310nm, FP Laser	256
7707EO13-E3	E3 Electrical to Optical Converter, 1310nm, FP Laser VistaLINK®	258
7707EO13-HD	HD Electrical to Optical Converter, 1310nm, FP Laser (up to 10 km) VistaLINK®	222
7707EO15	SDI Electrical to Optical Converter 19.4Mb/s or 143-540Mb/s, 1550nm, DFB Laser, VistaLINK®	198
7707EO15-DS3	DS3 Electrical to Optical Converter, 1550nm DFB Laser, VistaLINK®	256
7707EO15-HD	HD Electrical to Optical Converter, 1550nm, VistaLINK®	222
7707EOxx	SDI Electrical to Optical Converter 19.4Mb/s or 143-540Mb/s, CWDM DFB Laser, VistaLINK®	198
7707EOxx-DS3	DS3 Electrical to Optical Converter, CWDM DFB Laser, VistaLINK®	256
7707EOxx-E3	E3 Electrical to Optical Converter, CWDM Laser, VistaLINK®	258
7707EOxx-HD	HD Electrical to Optical Converter, CWDM, DFB Laser, VistaLINK®	222
7707EODxxx-E3	E3 Electrical to Optical Converter, DWDM Laser, VistaLINK®	258
7707EODxxx	SDI Electrical to Optical Converter, 19.4Mb/s or 143-540Mb/s, DWDM Laser, +7dBm, VistaLINK	198
7707EODxxx-DS3	DS3 (45Mb/s) Electrical to Optical Converter, DWDM Laser, +7dBm, VistaLINK®	256
7707EODxxx-HD	HD & SD Electrical to Optical Converter, 19.4Mb/s or 143-540Mb/s, DWDM Laser, +7dBm, VistaLINK®	222
7707ET13M-W	Ethernet Fiber Transceiver - Single Fiber, WDM, 1310nm, FP TX, RX on 1550nm, VistaLINK® Monitoring	246-247
7707ET15-W	Ethernet Fiber Transceiver, single fiber, WDM, 1550nm DFB TX, RX on 1310nm, VistaLINK®	246-247
7707ET13-F2	Ethernet Fiber Transceiver - Dual Fiber, 1310nm, FP Laser, VistaLINK® Monitoring	246-247
7707ETxx-F2	Ethernet Fiber Transceiver - Dual Fiber, CWDM, DFB Laser, VistaLINK® Monitoring	246-247
7707ETDxxx-F2	Ethernet Fiber Transceiver, dual fiber, DWDM TX, VistaLINK®	246-247
7707ET13M-TE1-W	Ethernet & T1/E1/J1 Fiber Transceiver, single fiber, WDM, 1310nm FP TX, RX on 1550nm, VistaLINK®	248-249
7707ET15-TE1-W	Ethernet & T1/E1/J1 Fiber Transceiver, single fiber, WDM, 1550nm DFB TX, RX on 1310nm, VistaLINK®	248-249
7707ET13-TE1-F2	Ethernet and TI/EI/J1 Fiber Transceiver, Dual Fiber, 1310 nm, FP Laser, VistaLINK®	248-249
7707ETxx-TE1-F2	Ethernet and TI/EI/J1 Fiber Transceiver, Dual Fiber, CWDM, DFB Laser, VistaLINK®	248-249
7707ETDxxx-TE1-F2	Ethernet & T1/E1/J1 Fiber Transceiver, dual fiber, DWDM TX, VistaLINK®	248-249
7707ET13M-4-W	Quad Ethernet Fiber Transceiver, single fiber, WDM, 1310nm FP TX, RX on 1550nm	250-251
7707ET15-4-W	Quad Ethernet Fiber Transceiver, single fiber, WDM, 1550nm DFB TX, RX on 1310nm	250-251
7707ET13-4-F2	Quad Ethernet Fiber Transceiver, dual fiber, 1310nm FP TX & RX	250-251
7707ETxx-4-F2	Quad Ethernet Fiber Transceiver, dual fiber, CWDM TX	250-251
7707ETxx-4-F2-H	Quad Ethernet Fiber Transceiver, dual fiber, CWDM TX, High Sensitivity RX	250-251
7707ETDxxx-4-HD-F2	Quad Ethernet Fiber Transceiver, dual fiber, DWDM TX	250-251
7707ETDxxx-4-HD-F2-H	Quad Ethernet Fiber Transceiver, dual fiber, DWDM TX, High Sensitivity RX	250-251
7707GPS-DR13-F2	GPS data receiver card, Dual Fiber, 1310nm FP Tx and Rx	255
7707GPS-DR15-F2	GPS data receiver card, Dual Fiber, 1550nm DFB Tx and Rx	255
7707GPS-DT13-F2	GPS data transmitter card, Dual Fiber, 1310nm FP Tx and Rx	254
7707GPS-DT15-F2	GPS data transmitter card, Dual Fiber, 1550nm DFB Tx and Rx	254
7707GT13M-W	Gigabit Ethernet Fiber Transceiver, single fiber, WDM, 1310nm DFB TX, RX on 1550nm, VistaLINK®	252-253
7707GT15-W	Gigabit Ethernet Fiber Transceiver, single fiber, WDM, 1550nm DFB TX, RX on 1310nm, VistaLINK®	252-253
7707GT13-F2	Gigabit Ethernet Fiber Transceiver, dual fiber, 1310nm FP TX & RX, VistaLINK®	252-253
7707GTxx-F2	Gigabit Ethernet Fiber Transceiver, dual fiber, CWDM TX, VistaLINK®	252-253
7707GTxx-F2-H	Gigabit Ethernet Fiber Transceiver, dual fiber, CWDM TX, High Sensitivity RX, VistaLINK®	252-253
7707GTDyyy-HD-F2	Gigabit Ethernet Fiber Transceiver, dual fiber, DWDM TX, VistaLINK®	252-253
7707GTDyyy-HD-F2-H	Gigabit Ethernet Fiber Transceiver, dual fiber, DWDM TX, High Sensitivity RX, VistaLINK®	252-253
7707IFRA	70/140MHz IF Fiber Receiver, VistaLINK® Monitoring	272-273
7707IFRA-H	70/140MHz IF High Sensitivity Fiber Receiver, VistaLINK® Monitoring	272-273
7707IFTA13	1310nm FP Laser, Short to Medium Haul	270-271
7707IFTA13L	1310nm DFB Laser, Medium Haul	270-271
7707IFTA15	1550nm DFB Laser, Long Haul	270-271
7707IFTAxx	70/140 Mhz IF Fiber Transmitter, CWDM wavelength, with VistaLINK®	270-271
7707IFTADxxx	70/140 Mhz IF Fiber Transmitter, DWDM wavelength, with VistaLINK®	270-271
7707IT13M-3-W	3 Channel Intercom Fiber Transceiver, single fiber, WDM, 1310nm FP TX, RX on 1550nm	242-243
7707IT15-3-W	3 Channel Intercom Fiber Transceiver, single fiber, WDM, 1550nm DFB TX, RX on 1310nm	242-243
7707IT13-3-F2	3 Channel Intercom Fiber Transceiver, dual fiber, 1310nm FP TX & RX	242-243
7707IT13M-8-W	8 Channel Intercom Fiber Transceiver, single fiber, WDM, 1310nm FP TX, RX on 1550nm	242-243
7707IT15-8-W	8 Channel Intercom Fiber Transceiver, single fiber, WDM, 1550nm DFB TX, RX on 1310nm	242-243
7707IT13-8-F2	8 Channel Intercom Fiber Transceiver, dual fiber, 1310nm FP TX & RX	242-243
7707ITxx-3-F2	3 Channel Intercom Fiber Transceiver, dual fiber, CWDM TX, VistaLINK®	242-243

Product Index

7707ITxx-8-F2	8 Channel Intercom Fiber Transceiver, dual fiber, CWDM TX, VistaLINK®	242-243
7707ITDxxx-3-F2	3 Channel Intercom Fiber Transceiver, dual fiber, DWDM TX, VistaLINK®	242-243
7707ITDxxx-8-F2	8 Channel Intercom Fiber Transceiver, dual fiber, DWDM TX, VistaLINK®	242-243
7707LR	L-Band Satellite Fiber Receiver, VistaLINK® Monitoring	274-275
7707LR-H	L-Band High Sensitivity Satellite Fiber Receiver, VistaLINK® Monitoring	274-275
7707LR-WB	L-Band Satellite Fiber Receiver, Wideband	274-275
7707LR-H-WB	L-Band High Sensitivity Satellite Fiber Receiver, Wideband	274-275
7707LTA13	1310nm, FP Laser, Short to Medium Haul	276-277
7707LTA13L	1310nm, DFB Laser, Medium Haul	276-277
7707LTA15	1550nm, DFB Laser, Long Haul	276-277
7707LTA13-WB	1310nm, FP Laser, Short to Medium Haul, Wideband	276-277
7707LTA13L-WB	1310nm, DFB Laser, Medium Haul, Wideband	276-277
7707LTA15-WB	1550nm, DFB Laser, Long Haul, Wideband	276-277
7707LTAxx	L-Band Satellite Fiber Transmitter, CWDM wavelength,	276-277
7707LTAxx-WB	L-Band Satellite Fiber Transmitter, CWDM wavelength, Wideband	276-277
7707LTADxxx	L-Band Satellite Fiber Transmitter, DWDM wavelength,	276-277
7707LTADxxx-WB	L-Band Satellite Fiber Transmitter, DWDM wavelength, Wideband	276-277
7707MB13M-W	Bi-directional SDI, 2 AES, RS232/422, GPI/O Fiber Transceiver, single fiber, WDM, 1310nm FP TX, RX on 1550nm, VistaLINK®	216-217
7707MB15-W	Bi-directional SDI, 2 AES, RS232/422, GPI/O Fiber Transceiver, single fiber, WDM, 1550nm DFB TX, RX on 1310nm, VistaLINK® (use with 7707MB13M-W)	216-217
7707MB13-F2	Bi-directional SDI, 2 AES, RS232/422, GPI/O Fiber Transceiver, dual fiber, 1310nm FP TX & RX, VistaLINK®	216-217
7707MBxx-F2	Bi-directional SDI, 2 AES, RS232/422, GPI/O Fiber Transceiver, dual fiber, CWDM TX, VistaLINK®	216-217
7707MBDxxx-F2	Bi-directional SDI, 2 AES, RS232/422, GPI/O Fiber Transceiver, dual fiber, DWDM Laser, VistaLINK®	216-217
7707MB-BHP-15	Bulkhead Breakout Panel for 15 x 7707MB cards (includes 15 - 3 ft. cables)	216-217
7707MB-MHP-15-B	Bulkhead Breakout Panel for 15 x 7707MB cards (includes 15 3 ft. cables) for balanced audio only	216-217
7707MX-BHP-1	Bulkhead Breakout Panel for 1 x 7707MB card (includes 1 3ft cable)	216-217
7707MR13M-W	SDI, 2 AES, Bi-directional RS232/422, GPI/O Fiber Receiver, single fiber, WDM, 1310nm FP TX, RX on 1550nm VistaLINK®	214-215
7707MR13-F2	SDI, 2 AES, Bi-directional RS232/422, GPI/O Fiber Receiver, dual fiber, 1310nm FP TX & RX, VistaLINK®	214-215
7707MRxx-F2	SDI, 2 AES, Bi-directional RS232/422, GPI/O Fiber Receiver, dual fiber, CWDM TX, VistaLINK®	214-215
7707MRDxxx-F2	SDI, 2 AES, Bi-directional RS232/422, GPI/O Fiber Receiver, dual fiber, DWDM Laser, VistaLINK®	214-215
7707MRA13-HD-F2	HD-SDI, 4 AES, Bi-directional RS232/422, GPI/O Fiber Receiver, dual fiber, 1310nm FP Tx & Rx, VistaLINK®	234-235
7707MRA13-HD-W	HD-SDI, 4 AES, Bi-directional RS232/422, GPI/O Fiber Receiver, single fiber, WDM, 1310nm FP Tx, Rx on 1550nm, VistaLINK® (Use with 7707MTA15-HD-W)	234-235
7707MRAxx-HD-F2	HD-SDI, 4 AES, Bi-directional RS232/422, GPI/O Fiber Receiver, dual fiber, CWDM TX, VistaLINK®	234-235
7707MRAxx-HD-F2-H	High Sensitivity Receiver	234-235
7707MRADxxx-HD-F2	HD-SDI, 4 AES, Bi-directional RS232/422, GPI/O Fiber Receiver, dual fiber, DWDM Tx, VistaLINK®	234-235
7707MRADxxx-HD-F2-H	High Sensitivity Receiver	234-235
7707MT15-W	SDI, 2 AES, Bi-directional RS232/422, GPI/O Fiber Transmitter single fiber, WDM, 1550nm FP TX, RX on 1310nm VistaLINK®	212-213
7707MT13-F2	SDI, 2 AES, Bi-directional RS232/422, GPI/O Fiber Transmitter dual fiber, 1310nm FP TX & RX, VistaLINK®	212-213
7707MTxx-F2	SDI, 2 AES, Bi-directional RS232/422, GPI/O Fiber Transmitter dual fiber, CWDM TX, VistaLINK®	212-213
7707MTDxxx-F2	SDI, 2 AES, Bi-directional RS232/422, GPI/O Fiber Transmitter dual fiber, DWDM Laser, VistaLINK®	212-213
7707MTA13-HD-F2	HD-SDI, 4 AES, Bi-directional RS232/422, GPI/O Fiber Transmitter, dual fiber, 1310nm FP Tx & Rx, VistaLINK®	236-237
7707MTA15-HD-W	HD-SDI, 4 AES, Bi-directional RS232/422, GPI/O Fiber Transmitter, single fiber, WDM, 1550nm DFB Tx, Rx on 1310nm, VistaLINK® (Use with 7707MRA13-HD-W)	236-237
7707MTAxx-HD-F2	HD-SDI, 4 AES, Bi-directional RS232/422, GPI/O Fiber Transmitter, dual fiber, CWDM Tx, VistaLINK®	236-237
7707MTAxx-HD-F2-H	HD-SDI, 4 AES, Bi-directional RS232/422, GPI/O Fiber Transmitter, dual fiber, CWDM Tx, High Sensitivity, VistaLINK®	236-237
7707MTADxxx-HD-F2	HD-SDI, 4 AES, Bi-directional RS232/422, GPI/O Fiber Transmitter, dual fiber, DWDM Tx, VistaLINK®	236-237
7707MTADxxx-HD-F2-H	HD-SDI, 4 AES, Bi-directional RS232/422, GPI/O Fiber Transmitter, dual fiber, DWDM Tx, High Sensitivity, VistaLINK®	236-237
7707OE	SDI Optical to Electrical Converter, 19.4Mb/s or 143-540Mb/s, VistaLINK® Monitoring	199
7707OE-3	Triple SDI Optical to Electrical Converter, 19.4Mb/s or 143-540Mb/s, VistaLINK®	197
7707OE-E3	E3 Optical to Electrical Converter, VistaLINK®	259
7707OE-3-HD	Triple HD or SD Optical to Electrical Converter, 19.4Mb/s or 143Mb/s -1.485Gb/s, VistaLINK®	221
7707OE-DS3	DS3 Optical to Electrical Converter, VistaLINK® Monitoring	257
7707OE-HD	HDTV Optical to Electrical Converter, 19.4Mb/s to 1.5Gb/s, VistaLINK® monitoring	223
7707OE-HD-H	HDTV Optical to Electrical Converter, 19.4Mb/s to 1.5Gb/s, High Sensitivity receiver, VistaLINK® monitoring	223
7707OO13	Optical Regenerator / Wavelength Converter for rates to 540Mb/s, 1270nm to 1610nm input, 1310nm FP output	278
7707OO15	Optical Regenerator / Wavelength Converter for rates to 540Mb/s, 1270nm to 1610nm input, 1550nm DFB laser output	278
7707OOxx	Optical Regenerator / Wavelength Converter for rates to 540Mb/s, 1270nm to 1610nm input, CWDM output	278
7707OODxxx	Optical Regenerator / Wavelength Converter for rates to 540Mb/s, 1270nm to 1610nm input, DWDM output	278
7707OO-2-OC	Telecom & Datacom Optical Wavelength Converter	280-281
7707OO-2L-OC	Telecom & Datacom Optical Wavelength Converter	280-281
7707OO13-HD	Optical Regenerator / Wavelength Converter for rates to 1.5Gb/s, 1270nm to 1610nm input, 1310nm FP output	279
7707OO15-HD	Optical Regenerator / Wavelength Converter for rates to 1.5Gb/s, 1270nm to 1610nm input,1550nm DFB Laser output	279
7707OOxx-HD	Optical Regenerator / Wavelength Converter for rates to 1.5Gb/s, 1270nm to 1610nm input, CWDM output	279
7707OOxx-HD-H	Optical Regenerator / Wavelength Converter for rates to 1.5Gb/s, High Sensitivity (-28 dBm) input, CWDM output	279
7707OODxxx-HD	Optical Regenerator / Wavelength Converter for rates to 1.5Gb/s, 1270nm to 1610nm input, DWDM output	279
7707OODxxx-HD-H	Optical Regenerator / Wavelength Converter for rates to 1.5Gb/s, High Sensitivity (-28dBm) input, DWDM output	279
7707RGBR	RGBHV/DVI Fiber Receiver	186-187
7707RGBR-C	RGBHV/DVI Coaxial Receiver	186-187
7707RGBR-GC	RGBHV/DVI G-Link Coaxial Receiver	186-187
7707RGBR-GF	RGBHV/DVI G-Link Fiber Receiver	186-187
7707RGBR-A2	RGBHV/DVI +2 Analog Audio Fiber Receiver	186-187
7707RGBR-A2-GC	RGBHV/DVI +2 Analog Audio, G-Link Coaxial Receiver	186-187
7707RGBR-A2-GF	RGBHV/DVI +2 Analog Audio, G-Link Fiber Receiver	186-187
7707RGBR13-A2KM-F2	RGBHV/DVI/KVM +2 Analog Audio + Bi-di Keyboard and Mouse Fiber Receiver, dual fiber, 1310nm TX & RX	186-187
7707RGBR-A2KM-C2	RGBHV/DVI/KVM +2 Analog Audio + Bi-di Keyboard and Mouse Coaxial Receiver, dual coax, TX & RX	186-187
7707RGBR13-A2KM-USB-F2	RGBHV/DVI/KVM +2 Analog Audio + Bi-di Keyboard and Mouse + USB, Fiber Receiver, dual fiber, 1310nm TX & RX	186-187
7707RGBR-A2KM-USB-C2	RGBHV/DVI/KVM +2 Analog Audio + Bi-di Keyboard and Mouse + USB Coaxial Receiver, dual coax, TX & RX	186-187
7707RGBR13M-A2KM-W	RGBHV/DVI/KVM +2 Analog Audio + Bi-di Keyboard and Mouse Fiber Receiver, single fiber, 1310nm TX, RX on 1550nm	186-187
7707RGBR13M-A2KM-USB-W	RGBHV/DVI/KVM +2 Analog Audio + Bi-di Keyboard and Mouse + USB Fiber Receiver, single fiber, 1310nm TX, RX on 1550nm	186-187
7707RGBR-xx-A2KM-F2	RGBHV/DVI/KVM +2 Analog Audio + Bi-di Keyboard and Mouse Fiber Receiver, dual fiber, CWDM Laser`	186-187
7707RGBR-xx-A2KM-USB-F2	RGBHV/DVI/KVM +2 Analog Audio + Bi-di Keyboard and Mouse + USB Fiber Receiver, dual fiber, CWDM Laser	186-187
7707RGBR-Dxxx-A2KM-F2	RGBHV/DVI/KVM +2 Analog Audio + Bi-di Keyboard and Mouse Fiber Receiver, dual fiber, DWDM Laser	186-187
7707RGBR-Dxxx-A2KM-USB-F2	RGBHV/DVI/KVM +2 Analog Audio + Bi-di Keyboard and Mouse and USB Fiber Receiver, dual fiber, DWDM Laser	186-187
7707RGBT13	RGBHV/DVI Fiber Transmitter, 1310nm FP	184-185
7707RGBT-C	RGBHV/DVI Coaxial Transmitter	184-185
7707RGBT-GC	RGBHV/DVI G-Link Coaxial Transmitter	184-185
7707RGBT-GF	RGBHV/DVI G-Link Fiber Transmitter, 1310nm FP Laser	184-185
7707RGBT13-A2	RGBHV/DVI + 2 Analog Audio Fiber Transmitter, 1310nm FP Laser	184-185
7707RGBT-A2-C	RGBHV/DVI + 2 Analog Audio, Coaxial Transmitter	184-185
7707RGBT-A2-GC	RGBHV/DVI + 2 Analog Audio, G-Link Coaxial Transmitter	184-185
7707RGBT-A2-GF	RGBHV/DVI + 2 Analog Audio, G-Link Fiber Transmitter, 1310nm FP Laser	184-185
7707RGBT13-A2KM-F2	RGBHV/DVI +2 Analog Audio + Bi-di Keyboard and Mouse Fiber Transmitter, dual fiber, 1310nm TX & RX	184-185
7707RGBT-A2KM-C2	RGBHV/DVI +2 Analog Audio + Bi-di Keyboard and Mouse Coaxial Transmitter, dual coax, TX & RX	184-185

7707RGBT13-A2KM-USB-C-F2	RGBHV/DVI +2 Analog Audio + Bi-di Keyboard and Mouse + USB Fiber Transmitter, dual fiber, 1310nm TX & RX	184-185
7707RGBT-A2KM-USB-C2	RGBHV/DVI +2 Analog Audio + Bi-di Keyboard and Mouse + USB Coaxial Transmitter, dual coax, TX & RX	184-185
7707RGBT15-A2KM-W	RGBHV/DVI +2 Analog Audio + Bi-di Keyboard and Mouse Fiber Transmitter, single fiber, TX on 1550nm, RX on 1310nm	184-185
7707RGBT15-A2KM-USB-W	RGBHV/DVI/KVM +2 Analog Audio + Bi-di Keyboard and Mouse + USB Fiber Transmitter, single fiber, TX on 1550nm, RX on 1310nm	184-185
7707RGBTxx	RGBHV/DVI Fiber Transmitter, CWDM Laser	184-185
7707RGBTxx-A2	RGBHV/DVI + 2 Analog Audio Fiber Transmitter, CWDM Laser	184-185
7707RGBT-xx-A2KM-F2	RGBHV/DVI/KVM +2 Analog Audio + Bi-di Keyboard and Mouse Fiber Transmitter dual fiber, CWDM Laser	184-185
7707RGBT-xx-A2KM-USB-F2	RGBHV/DVI/KVM +2 Analog Audio + Bi-di Keyboard and Mouse + USB Fiber Transmitter, dual fiber, CWDM Laser	184-185
7707RGBT-Dxxx	RGBHV/DVI Fiber Transmitter, DWDM Laser	184-185
7707RGBT-Dxxx-A2	RGBHV/DVI + 2 Analog Audio Fiber Transmitter, DWDM Laser	184-185
7707RGBT-Dxxx-A2KM-F2	RGBHV/DVI/KVM +2 Analog Audio + Bi-di Keyboard and Mouse Fiber Transmitter, dual fiber, DWDM Laser	184-185
7707RGBT-Dxxx-A2KM-USB-F2	RGBHV/DVI/KVM +2 Analog Audio + Bi-di Keyboard, Mouse and USB Fiber Transmitter, dual fiber, DWDM Laser	184-185
7707SVR-2	Dual S-Video Fiber Receiver, VistaLINK®	183
7707SVT-2	Dual S- Video Fiber Transmitter, 1310nm FP Laser, VistaLINK®	180
7707VAR	SDI with 2 AES Audio Fiber Receiver, VistaLINK® Monitoring	203
7707VAR-A4	SDI with 4 Analog Audio Fiber Receiver VistaLINK® Monitoring	205
7707VAR-HD	HDTV with 4 AES Audio Fiber Receiver, VistaLINK® Monitoring	232
7707VAR-HD-H	HDTV with 4 AES Audio High Sensitivity Fiber Receiver, VistaLINK® Monitoring	232
7707VAT13	SDI with 2 AES Audio Fiber Transmitter, 1310nm, FP Laser, VistaLINK® Monitoring	202
7707VAT15	SDI with 2 AES Audio Fiber Transmitter, 1550nm, DFB Laser, VistaLINK® Monitoring	202
7707VATxx	SDI with 2 AES Audio Fiber Transmitter, CWDM DFB Laser, VistaLINK® Monitoring	202
7707VATDxxx	SDI with 2 AES Audio Fiber Transmitter, DWDM wavelength, VistaLINK®	202
7707VAT13-A4	SDI with 4 Analog Audio Fiber Transmitter, 1310nm, FP Laser, VistaLINK® Monitoring	204
7707VAT15-A4	SDI with 4 Analog Audio Fiber Transmitter, 1550nm, DFB Laser, VistaLINK® Monitoring	204
7707VAT13-HD	HD-SDI with 4 AES Audio Fiber Transmitter, 1310nm, FP Laser, VistaLINK® Monitoring	233
7707VAT15-HD	HD-SDI with 4 AES Audio Fiber Transmitter, 1550nm DFB Laser, VistaLINK® Monitoring	233
7707VATxx-A4	SDI with 4 Analog Audio Fiber Transmitter, CWDM DFB Laser, VistaLINK® Monitoring	204
7707VATxx-HD	HD-SDI with 4 AES Audio Fiber Transmitter, CWDM Laser, VistaLINK® Monitoring	233
7707VATDxxx-HD	HD-SDI with 4 AES Audio Fiber Transmitter, DWDM Laser, VistaLINK® Monitoring	233
7707VATDxxx-A4	SDI with 4 Analog Audio Fiber Transmitter, DWDM DFB Laser, VistaLINK® Monitoring	204
7707VR-2-HD	Dual HD-SDI Demux, Fiber Receiver, VistaLINK®	211
7707VR-2-HD-H	Dual HD-SDI Demux Fiber Receiver, High Sensitivity Input, VistaLINK®	211
7707VR-2-OC12	Dual SDI/ASI/SDTi + Ethernet SONET/SDH Fiber Receiver, 1310nm FP laser, VistaLINK®	265
7707VR-4	Quad SDI/ASI Demux Fiber Receiver, VistaLINK®	207
7707VR-4-H	Quad SDI/ASI Demux Fiber Receiver, High sensitivity RX (-28dBm), VistaLINK®	225
7707VR-4-HS	Quad SD/Dual HD Fiber Receiver	225
7707VR-4-HS-H	Quad SD/Dual HD Demux Fiber Receiver, High sensitivity RX, VistaLINK®	225
7707VR-8	Eight SDI/ASI Demux Fiber Receiver, VistaLINK®	209
7707VR-8-H	Eight SDI/ASI Demux Fiber Receiver, High sensitivity RX (-28dBm), VistaLINK®	209
7707VR-8-OC48	Eight Channel SDI + Ethernet SONET/SDH Fiber Receiver, 1310nm laser, VistaLINK®	262-263
7707VT-2-OC12	Dual SDI/ASI/SDTi + Ethernet SONET/SDH Fiber Transmitter, 1310nm FP laser, VistaLINK®	264
7707VT13-2-HD	Dual HD-SDI Mux Fiber Transmitter, 1310nm FP, VistaLINK®	210
7707VT13-4	Quad SDI/ASI Mux Fiber Transmitter, 1310nm FP, VistaLINK®	206
7707VT-8-OC48	Eight Channel SDI + Ethernet SONET/SDH Fiber Transmitter, 1310nm laser, VistaLINK®	260-261
7707VT-13-8	Eight SDI/ASI Mux Fiber Transmitter, 1310nm FP, VistaLINK®	208
7707VT15-2-HD	Dual HD-SDI Mux Fiber Transmitter, 1550nm DFB Laser	210
7707VT15-4	Quad SDI/ASI Mux Fiber Transmitter, 1550nm DFB, VistaLINK®	206
7707VT-15-8	Eight SDI/ASI Mux Fiber Transmitter, 1550nm DFB, VistaLINK®	208
7707VTxx-2-HD	Dual HD-SDI Mux Fiber Transmitter, CWDM Laser, VistaLINK®	210
7707VTxx-4	Quad SDI/ASI Mux Fiber Transmitter, CWDM Laser, VistaLINK®	206
7707VTDxxx-4	Quad SDI/ASI Mux Fiber Transmitter, DWDM Laser, VistaLINK®	206
7707VT13-4-HS	Quad SD/Dual HD Fiber Transmitter, 1310nm FP, VistaLINK®	224
7707VT15-4-HS	Quad SD/Dual HD Fiber Transmitter, 1550nm DFB, VistaLINK®	224
7707VTxx-4-HS	Quad SD/Dual HD Fiber Transmitter, CWDM Laser, VistaLINK®	224
7707VTDxxx-4-HS	Quad SD/Dual HD Fiber Transmitter, DWDM Laser, VistaLINK®	224
7707VTxx-8	Eight SDI/ASI Mux Fiber Transmitter, CWDM Laser, VistaLINK®	208
7707VTDxxx-2-HD	Dual HD-SDI Mux Fiber Transmitter, DWDM Laser, VistaLINK®	210
7707VTDxxx-8	Eight SDI/ASI Mux Fiber Transmitter, DWDM Laser, VistaLINK®	208
7710ARC	SD Aspect Ratio Converter	96-97
7710ARC-F	SD Aspect Ratio Converter with Fill Input and Keying	96-97
7710DCDA-HD	HD Monitoring Downconverter and Distribution Amplifier (4HD reclocked 1.5Gb/s, selectable 3 SD SDI outputs or 3 composite analog outputs) with closed caption monitoring	98-99
7710NR-HD	HD/SD Noise Reducer with Image Enhancement	101
7710UC-KF	HD Key/Fill Upconverter	100
7710XC-HD	HD Cross Converter with VANC and Embedded Audio support	102-103
7710XC-AES4-HD	HD Cross Converter with VANC, Embedded Audio and discrete AES support	102-103
7710XUC-HD	HD Format Up/Cross Converter	104-105
7710XUC-AES4-HD	HD Format Up/Down/Cross Converter with external AES	104-105
7710XUDC-AES4-HD	HD Format Up/Down/Cross Converter with external AES	104-105
7711UC-HD	HD upconverter (with noise reduction and image enhancement)	106-107
7711UC-AES4-HD	HD upconverter (with noise reduction and image enhancement) and External AES	106-107
7713HDC	Downconverter and Distribution Amplifier	108-109
7714HDC	Downconverter and Distribution Amplifier	110-111
7720AD-A4	SDI AES Audio De-embedder with 2 unbalanced AES outputs and 4 analog audio outputs	123
7720AD-B-A4-LTC	SDI AES Audio De-embedder with 2 balanced AES outputs, 4 analog audio outputs and VITC to LTC Translator	123
7720AD4	SDI AES Audio De-embedder with 4 unbalanced AES outputs (2 audio groups)	123
7720AD4-B	SDI AES Audio De-embedder with 4 balanced AES outputs (2 audio groups) 7720AD-A4 SDI AES Audio De-embedder with 4 analog audio outputs	132-133
7720ADC-A4	Quad Analog Audio to Dual AES Converter	132-133
7720AD8-DD-HD	HD/SD Audio De-embedder & Dolby E/AC-3 Decoder & Re-embedder	124-125
7720AE4	SDI 4 AES Pair Audio Embedder	122
7720AM-AES4	Quad AES Audio Mixer - Shuffler	114
7720DAC-A4	Dual AES to Quad Analog Audio Converter	114
7720DAC-A4-B	Dual AES to Quad Analog Audio Converter with 2 balanced AES inputs	114
7721AD4-HD	HD SDI Audio De-embedded with 4 Unbalanced AES Outputs	117
7721AD8-HD	HD/SD 8 AES (16 Channel) Audio De-embedder	119
7721AD-A4-HD	HD SDI Audio De-embedded with 4 Analog Audio Outputs	117
7721AE-A4	SD Analog Audio Embedder	121
7721AE4-HD	HD 4 AES Pair Audio Embedder	116
7721AE-A4-HD	HD/SD Analog Audio Embedder	117
7721AE8-HD	HD/SD 8 AES (16 Channel) Audio Embedder	118
7721AE8-DE-HD	HD/SD Audio Embedder & Dolby® E Encoder & Re-embedder	126
7721DD4-HD	Quad serial data De-embedder	128
7721DE4-HD	Quad serial data Embedder	127
7725VBI-K-HD	HD/SD VBI Sidechain Bridge/Keyer	156-157

Product Index

7730ADC	Component Analog Video to SDI converter	132-133
7730ADC-A4	Component Analog Video to SDI converter with 4 channel analog audio converter/embedder	132-133
7730ADC-HD	HD Component Analog Video to HD SDI converter	134-135
7730ADC-A4-HD	HD Component Analog Video to HD SDI converter with a 4 analog audio converter/embedder	134-135
7730DAC	SDI D to A Component Analog Video Converter	130-131
7730DAC-A4	SDI D to A Component Analog Video Converter with a four-channel Analog Audio converter/embedder	130-131
7730DAC-HD	HD D to A Component Converter: YPrPb/RGB + Sync via BNC Outputs	129
7732DVP-HD	HD Dual Link Processor	462
7732DVP-3D-HD	HD 3D HD Dual Link Processor	463
7732PFT-HD	HDTV Progressive Format Translator	467
7736CDM	Component Analog Video to SDI decoder OSD and VistaLINK® monitoring, control & fault reporting (Optional frame synchronizer-order +S)	140-141
7736CDM-A4	Component Analog Video to SDI decoder, analog audio to embedded and AES, with OSD and VistaLINK® monitoring, control & fault reporting (Optional frame synchronizer-order +S)	140-141
7736CD2	Dual Component Decoder (Optional frame synchronizer-order +S)	142-143
7736CD2-A4	Dual Component Decoder with 4 analog outputs (Optional frame synchronizer-order +S)	142-143
7736CD2-A8	Dual Component Decoder with 8 analog outputs (Optional frame synchronizer-order +S)	142-143
7736CEM	Component SDI to composite analog video encoder with OSD and VistaLINK® monitoring, control & fault reporting (Optional frame synchronizer available -order +S)	136-137
7736CEM-A4	Component SDI to composite analog video encoder with quad audio DAC (audio source is embedded or from dual unbalanced AES inputs) and OSD and VistaLINK® monitoring, control & fault reporting (Optional frame synchronizer available -order +S)	136-137
7736CE2	Dual Composite Encoder (Optional frame synchronizer-order +S)	138-139
7736CE2-A4	Dual Composite Encoder with 4 analog outputs (Optional frame synchronizer-order +S)	138-139
7736CE2-A8	Dual Composite Encoder with 8 analog outputs (Optional frame synchronizer-order +S)	138-139
7743DLY-HD	HD/SD SDI Video Delay (3.3 sec for HD, 16 sec for SD)	152
7746FSE	SD Frame Synchronizer	144-145
7746FSE-2	Dual Channel SD Frame Synchronizer	144-145
7746FS-EAES4	SD Frame Synchronizer with 4 AES audio pairs and embedded audio processing & AES support	144-145
7746FSE-HD	HD/SD Frame Synchronizer	146-147
7746FS-EAES4-HD	HD/SD Frame Synchronizer with 4 AES audio pairs and embedded audio processing & AES support	146-147
7746FS-EAES8-HD	HD/SD Frame Synchronizer with 8 AES audio pairs and embedded audio processing & AES support	148-149
7746FS-EAES8-DD-HD	HD/SD Frame Synchronizer with 8 AES audio pairs and embedded audio processing & AES support, Dolby E	150-151
7751SRG-HD	HD Tri-Level Sync Generator	306
7750TG	SDI Test Signal Generator	307
7750TG-TS	SMPTE 310M/DVB-ASI Transport Stream Generator	307
7751TG2-HD	Dual HD Test Signal Generator with embedded audio	304
7751TG2-CF-HD	HD Test Signal Generator with Trouble Slide	305
7760AVM2-A (A-B)	SDI Video & Audio Monitor/Conversion with On Screen Display (Single Slot) with Teletext subtitle decoder	56-57
7760AVM2-HD	HD Video & Audio Monitoring	56-57
7760AVM-Lite A & B	SDI Video & Audio Monitoring DAC (A for AES Output; B for AES Input)	58
7760VMS-HD	HD Monitoring Splitter	59
7760AVM-BHP-10	Bulkhead Breakout Panel for 10x7760AVMs (includes 10-3ft cables)	62-63
7760AVM-BHP-5	Bulkhead Breakout Panel for 5x7760AVMs (includes 5-3ft cables)	62-63
7760CCM-HD	SD-SDI/HD-HDI Closed Caption monitor, and EIA608/EIA708 Translator with VistaLINK®	414
7761AVM2-DC	Dual Channel Composite Analog Video & Analog Audio Monitoring	60-61
7761AVM2-SDC	Dual Channel S-Video & Analog Audio Monitoring input and S-Video output	60-61
7761AVM2-SDC-S	Dual S-Video & Analog Audio Monitoring with Dual S-Video Outputs	60-61
7761AVM-BHP-15	Bulkhead Breakout Panel for 15x7761AVM-DCs (includes 15-3ft cables)	60-61
7765AVM-4A-CA	Quattro, Four SDI Video Quad Split Display with Embedded or External AES Audio Monitoring, Composite Analog Output	52-53
7765AVM-4A-HD	Quattro, Four SDI Video Quad Split Display with Embedded or External AES Audio Monitoring, HD-SDI Output	52-53
7765AVM-4A-SD	Quattro, Four SDI Video Quad Split Display with Embedded or External AES Audio Monitoring, SD-SDI Output	52-53
7765AVM-4A-VGA	Quattro, Four SDI Video Quad Split Display with Embedded or External AES Audio Monitoring, Analog RGB Output	52-53
7765AVM-4-CA	Quattro, Four SDI Video Quad Split Display with Embedded Audio Monitoring, Composite Analog Output	52-53
7765AVM-4-HD	Quattro, Four SDI Video Quad Split Display with Embedded Audio Monitoring, HD-SDI Output	52-53
7765AVM-4-SD	Quattro, Four SDI Video Quad Split Display with Embedded Audio Monitoring, SD-SDI Output	52-53
7765AVM-4-VGA	Quattro, Four SDI Video Quad Split Display with Embedded Audio Monitoring, Analog RGB Output	52-53
7765AVM-4A-BHP-7	Bulkhead Breakout Panel for 7x7765AVM-4A (includes 7-3ft cables)	52-53
7766AVM-4A-CA	Analog Quattro Four Composite Analog Video (BNC) and Analog Audio Monitoring with Composite Analog output	54-55
7766AVM-4A-SD	Analog Quattro Four Composite Analog Video (BNC) and Analog Audio Monitoring with SD-SDI output	54-55
7766AVM-4A-VGA	Analog Quattro Four Composite Analog Video (BNC) and Analog Audio Monitoring with Analog RGB output	54-55
7766AVM-S4A-CA	Analog Quattro Four S-Video & Analog Audio Monitoring with Composite Analog output	54-55
7766AVM-S4A-SD	Analog Quattro Four S-Video & Analog Audio Monitoring with SD-SDI output	54-55
7766AVM-S4A-VGA	Analog Quattro Four S-Video & Analog Monitoring with Analog RGB output	54-55
7766AVM-4A-BHP-1	Bulkhead Breakout Panel for 1 7766AVM-4A/S4A card (includes 1-3ft cable)	54-55
7766AVM-4A-BHP-4	Bulkhead Breakout Panel for up to 4 7766AVM-4A/S4A cards (includes 4- 3ft cables)	54-55
7767VIP4-HSN	4 asynchronous HD/SD/NTSC/PAL inputs with embedded audio, one background DVI-I	44-45
7767VIP4-HSN-G	4 asynchronous HD/SD/NTSC/PAL inputs with embedded audio, one background DVI-I & single built-in fiber output	44-45
7767VIP4-SN	4 asynchronous SD/NTSC/PAL inputs with embedded audio, one background DVI-I (DVI-D or RGBHVI)	44-45
7767VIP8-HSN	8 asynchronous HD/SD/NTSC/PAL inputs with embedded audio, one background DVI-I	46-47
7767VIP8-HSN-G	8 asynchronous HD/SD/NTSC/PAL inputs with embedded audio, one background DVI-I & single built-in fiber output	46-47
7767VIP8-SN	8 asynchronous SD/NTSC/PAL inputs with embedded audio, one background DVI-I (DVI-D or RGBHVI)	46-47
7767VIP12-HSN	12 asynchronous HD/SD/NTSC/PAL inputs with embedded audio, one background DVI-I	48-49
7767VIP12-HSN-G	12 asynchronous HD/SD/NTSC/PAL inputs with embedded audio, one background DVI-I & single built-in fiber output	48-49
7767VIP12-SN	12 asynchronous SD/NTSC/PAL inputs with embedded audio, one background DVI-I	48-49
7767VIP-AI-BAL	Discrete balanced AES/EBU audio or Analog audio input breakout panel (2RU)	62-63
7767VIP-AI-U	Discrete unbalanced AES/EBU audio input (4 AES per video input) breakout panel (2RU)	62-63
7767VIP-BHP-AUX	BHP GPI/O and AUX Breakout	62-63
7772MFD-HD	HD JPEG 2000 De-Compression CODEC	298
7772MFC-HD	HD JPEG 2000 Compression CODEC	299
7772MFX-HD	HD JPEG 2000 HD/SD Encoder and decoder	304-305
7772MFX-HD-IP	HD JPEG 2000 HD/SD Encoder and decoder with FEC protected IP Outputs	306
7780TSM-IP	MPEG2/H.264 IP Transport Stream Monitor	294-295
7780TSM-ASI	MPEG2/H.264 ASI Transport Stream Monitor	294-295
7780DLY-ASI	ASI Delay	296
8010TM	SDI Time Code Generator/Reader with Character Inserter	434
8010TM-IRIG	SDI Time Code Master with IRIG Reader	435
8083XDS-AD	Analog & SDI XDS Encoder	418
8084	SDI Closed Caption Encoder	417
8084AD	Analog & SDI Closed Captioning Encoder	417
9000DWDM-D32	32 Ch DWDM Demux, 100Ghz spacing, 1RU enclosure	289
9000DWDM-D40	40 Ch DWDM Demux, 100Ghz spacing, 1RU enclosure	289
9000DWDM-M32	32 Ch DWDM Mux, 100Ghz spacing, 1RU enclosure	289
9000DWDM-M40	40 Ch DWDM Mux, 100Ghz spacing, 1RU enclosure	289
9000EDFA-B,-L & P	Erbium Doped Fiber Amplifiers	282

9000NCP	VistaLINK® Network Control Panel (includes Monitoring Toolkit CD-ROM) (1RU)	70
9000NCP2	VistaLINK® Network Control Panel (includes Monitoring Toolkit CD-ROM) (2RU)	71
9590	SDI Digital Graticule Generator	466
9725LG	SDI Logo Inserter System	22-23
9725LGA	SDI Media Inserter System	22-23
9767VIP8-NGI	1RU 4 asynchronous DVI-I (DVI-D or RGBHV with adapter) inputs and four NTSC/PAL (or S-Video) inputs, one background DVI-I (DVI-D or RGBHV with adapter) input. Single DVI-I (DVI-D or RGBHV with adapter) or one serial monitoring output Includes VistaLINK® VLPRO-C software configuration tool and Maestro-VIP display layout GUI	50-51
AESIMP-1M	In-line transformer with a single BNC to a single male	115
AESIMP-6F6M	AES Impedance Changer for mobile fiber systems	115
AESIMP-12F	12 CH Line Impedance Matching Panel (XLR Female to BNC)	115
AESIMP-12M	12 CH Line Impedance Matching Panel (XRL Male to BNC)	115
AN9725LG	Logo Inserter System	24
CaptionWare	Closed Caption and XDS Configuration Utility	415
CI-0001	RS232/422 Serial Interface Card	407
CI-0003	RS232/422 Control Panel Serial Card	407
CI-0004	Multi Q-Link Card	407
CP-1000A	Intelligent Remote Panel, 1RU 16 buttons	391
CP-1600A & CP1601A	Remote mini XY panel, BPS	392
CP-1604	Remote multi-mode panel, 20 button per source	393
CP-2024A	Intelligent Remote Panel, 1RU 24 buttons	394
CP-2032A	Intelligent Remote Panel, 1RU 32 buttons	395
CP-2048A	Intelligent Remote Panel, 1RU 48 buttons	396
CP-2402	Remote Control Panel	397
CP-2402-LP	Local Control Panel	397
CP-3200A	Remote Control Panel with keypad and display	398
CP-3201	Remote Control Panel, multi-mode, 40 button per source	399
CP-3208	Remote Control Panel, eight destination, 32 button per source	400
CP-6400	Remote Display Panel, XY, keypad	401
CP-6401	Remote multi-mode panel, 80 button per source	402
CP-6402,6404,6406,6408	Remote Control Panel, 2,4,6 & 8 destinations	403
CWDM & DWDM Options	CWDM & DWDM Wavelength Ordering Information	293
ECAS-HD	Camera Adapter for HDCAM Sony cameras	460-461
ECAS-1394-HD	Camera Adapter with 1394A I/O for HDCAM Sony cameras	460-461
ECAS-1394-LEMO-HD	Camera Adapter with 1394A I/O and fibre optic I/O for HDCAM Sony cameras - LEMO fiber connector	460-461
ECAX	Camera Adapter for XDCAM-HD Sony cameras	460-461
ECAX-1 394	Camera Adapter with 1 394A I/O for XDCAM-HD Sony cameras	460-461
ECAX-1 394-LEMO	Camera Adapter with 1 394A I/O and fiber optic I/O for XDCAM-HD Sony cameras-LEMO fiber connector	460-461
ECAP-HD	Camera Adapter for high definition Panasonic cameras	460-461
ECAP-1394-HD	Camera Adapter with 1394A I/O for HD Panasonic cameras	460-461
ECAP-1394-LEMO-HD	Camera Adapter with 1394A I/O and fibre optic I/O for HD Panasonic cameras - LEMO fiber connector	460-461
ECB-LEMO-HD	Base Station for HD camera adapters - LEMO fiber connector	460-461
ECB-CP-LEMO-HD	Base Station for HD camera adapters - with DC camera power (requires ECA-PS Power Converter) - LEMO fiber connector	460-461
ECA-PS	120 Watt output Camera Adapter DC-DC Power Converter - for use with camera adapters with fiber optic I/O and CP version Base Stations	460-461
ECA-PS-160	160 Watt output Camera Adapter DC-DC Power Converter - for use with camera adapters with fiber optic I/O and CP version Base Stations	460-461
EQX26-18X18S	18 input, 18 output SDI/ASI Video Router with single power supply	344-345
EQX26-18X18H	18 input, 18 output HD/SDI/ASI Video Router with single power supply	344-345
EQX26-18x18-3G	18 input, 18 output 3G/HD/SDI/ASI Video Router with single power supply	344-345
EQX26-18x36-3G-F	18 input, 36 output 3G/HD/SDI/ASI Video router with Fiber I/O and single power supply	344-345
EQX16-18X18S	18 input, 18 output SDI/ASI Video Router with single power supply	344-345
EQX16-18X18H	18 input, 18 output HD/SDI/ASI Video Router with single power supply	344-345
EQX16-18x18-3G	18 input, 18 output 3G/HD/SDI/ASI Video Router with single power supply	344-345
EQX16-18x36-3G-F	18 input, 36 output 3G/HD/SDI/ASI Video router with Fiber I/O and single power supply	344-345
HD9010TM	HD Timecode Generator/Reader	436-437
HD9010TM-IRG	HDTV Time Code Master with IRIG-B Reader	438-439
HDSD9045TR	4:4:4/HD/SD VANC Encoder including Keylog Tracker	472-473
HDSD9045TR/5550/UV-3	4:4:4/HD/SD VANC Encoder including Keylog Tracker, KeyKode Decoder and UV-3 Head	472-473
HD9045PVE	4:4:4 HD Production VANC Encoder including Keylog Tracker	474
HD9084	HD DTV Caption Encoder	416
HDSD9155Q	HD SD Afterburner	470-471
HD9626DSK	HD Downstream Keyer	18-19
HD9690	HD Graticule Generator	464-465
HD9690-444	4:4:4 Graticule Generator	464-465
HD9725LG	HDTV Logo Inserter with front panel control / Slate Generator	20-21
HD9725LGA	HDTV Media Keyer with front panel control/Slate Generator and Audio with Audio Support	20-21
HDSD9545DLY-PRO	HD/SD Video and Audio Delay/Protection System with 24 seconds of delay	154-155
HDSD9545DLY-PRO-HD40	HD/SD Video and Audio Delay/Protection System with 40 seconds of delay	154-155
KeyLog Tracker	Telecine Logging & Configuration Mgmt Tool	475
MBL-FCR-TAC4-300	Cable Reel and 300m TAC4, SMF, Hermaphroditic Connectors	462-463
MBL-FCR-TAC4-400	Cable Reel and 400m TAC4, SMF, Hermaphroditic Connectors	462-463
MBL-FCR-TAC4-450	Cable Reel and 450m TAC4, SMF, Hermaphroditic Connectors	462-463
MBL-FCR-TAC4-500	Cable Reel and 500m TAC4, SMF, Hermaphroditic Connectors	462-463
MBL-FCR-TAC4-600	Cable Reel and 600m TAC4, SMF, Hermaphroditic Connectors	462-463
MBL-FS3H-TAC4-3-ST	Tactical Metal Receptacle to ST, 4-Ch, SM, 3 foot length	462-463
MBL-IRC-420	Impact Resistant Transit Case	462-463
MBL-IRCBH+AB	Anton Bauer Impact Resistant Quad Battery Holder for Evertz 7700PCO	462-463
MBL-IRCBP-TAC4-3-ST	Tactical Plastic Receptacle to ST, Delphi Hermaphroditic TAC4, SM, 3 foot length	462-463
Overture™	Overture™ Branding Software	25
PA-SW-708	ProCAP Author Software Only, 1 Station License, Adds 708 to Base	424-425
PA-SW-BASE	ProCAP Author Software Only, 1 Station License, Base CEA-608 Standard	424-425
PA-SW-DVD	ProCAP Author Software Only, 1 Station License, Adds DVD to Base	424-425
PA-SW-FULL	ProCAP Author Software Only, 1 Station License, All Options	424-425
PC-HW	ProCAP Capture Hardware and Third Party Software	424-425
PCT-HW-TC	ProCAP Transfer PCI Timecode Reader Board	424-425
PI-1604A	With four ports supporting 64 buttons/lamps	406
PI-1608A	With eight ports supporting 128 buttons/lamps	406
PT-SW	ProCAP Transfer Software Only, 1 Station License, with 1 year support	424-425
PKG3000MVP-8-SN	8 auto-detecting SD-SDI (with embedded audio as a standard feature) and Composite Analog (NTSC, PAL) video inputs, with frame and frame controller, single power supply and single processor/output display module	33-37
PKG3000MVP-16-SN	16 auto-detecting SD-SDI (with embedded audio as a standard feature) and Composite Analog (NTSC, PAL) video inputs, with frame and frame controller, single power supply and single processor/output display module	33-37
PKG3000MVP-24-SN	24 auto-detecting SD-SDI (with embedded audio as a standard feature) and Composite Analog (NTSC, PAL) video inputs, with frame and frame controller, single power supply and single processor/output display module	33-37
PKG3000MVP-32-SN	32 auto-detecting SD-SDI (with embedded audio as a standard feature) and Composite Analog (NTSC, PAL)	

Product Index

	video inputs, with frame and frame controller, single power supply and single processor/output display module	33-37
PKG3000MVP-40-SN	40 auto-detecting SD-SDI (with embedded audio as a standard feature) and Composite Analog (NTSC, PAL) video inputs, with frame and frame controller, single power supply and single processor/output display module	33-37
PKG3000MVP-48-SN	48 auto-detecting SD-SDI (with embedded audio as a standard feature) and Composite Analog (NTSC, PAL) video inputs, with frame and frame controller, single power supply and single processor/output display module	33-37
PKG3000MVP-56-SN	56 auto-detecting SD-SDI (with embedded audio as a standard feature) and Composite Analog (NTSC, PAL) video inputs, with frame and frame controller, single power supply and single processor/output display module	33-37
PKG3000MVP-64-SN	64 auto-detecting SD-SDI (with embedded audio as a standard feature) and Composite Analog (NTSC, PAL) video inputs, with frame and frame controller, single power supply and single processor/output display module	33-37
PKG3000MVP-72-SN	72 auto-detecting SD-SDI (with embedded audio as a standard feature) and Composite Analog (NTSC, PAL) video inputs, with frame and frame controller, single power supply and single processor/output display module	33-37
PKG7700MFOS	Single Case Mobile fiber optic system (includes one 7700FR-C multi-frame, one Impact Resistant Transit Case, One TAC4 to ST/PC breakout cable, one 300m fiber cable reel	458-459
PKG7700MFOS-2	Dual Case Mobile fiber optic system (includes two 7700FR-C multi-frames, two Impact Resistant Transit Cases, two TAC4 to ST/PC breakout cable, one 300m fiber cable reel	458-459
PKG9625SW	SD Mini Master Control Switcher Package	10-11
PKGHD9625SW	HD Mini Master Control Switcher Package	10-11
PKGXRF6L-32x32:	32x32 RF Routing System	409-410
PKGXRF6L-32x64:	32x64 RF Routing System	409-410
PKGXRF6L-64x64:	64x64 RF Routing System	409-410
PKGXRF6L-128x128:	128x128 RF Routing System	409-410
PKGXRF6L-512x512:	512x512 RF Routing System	409-410
PROCAP	Offline Captioning	420-421
QMC-MCS	Master Control Switcher	1-7
QMC-2-SD-U	SD Master Control Switcher Single channel SDI switcher/mixer unbalanced	1-9
QMC-2-SD-B	SD Master Control Switcher Single channel SDI switcher/mixer balanced	1-9
QMC-2-SD-CH2	Additional Switcher/Mixer Channel	1-9
QMC-2-HD-U	HD Master Control Switcher Single channel HD SDI switcher/mixer unbalanced	1-9
QMC-2-HD-B	HD Master Control Switcher Single channel HD SDI switcher/mixer balanced AES audio	1-9
QMC-2-HD-CH2	Additional Switcher/Mixer Channel	1-9
QT-1616H	16x16 HD/SD router	354-355
QT-3232H	32x32 HD/SD router	354-355
QT-1616S	16x16 SD router	356-357
QT-3232S	32x32 SD router	356-357
QT-1616N	16x16 Analog Video router	358-359
QT-3232N	32x32 Analog Video router	358-359
QT-1616-AA	16x16 Analog Audio router	360-361
QT-3232-AA	32x32 Analog Audio router	360-361
QUATTRO™	Discrete Video and Video Signal Monitoring	41
Q1601, 1602, 0802	HD/SD Analog Video & Audio Routers, 16x1 to 16x2 & 8x2	378-379
Q16-S & Q32-S	SD Video & Embedded Audio Routers 16x16 to 32x32	380-381
Q16-N & Q32-N	Analog Video Routers 16x16 to 32x32	382-383
Q16-AES & Q32-AES	Digital Audio Routers 16x16 to 32x32	384-385
Q16-AA & Q32-AA	Mono & Stereo Analog Audio Routers 16x40 to 32x32	386-387
Q32-PR & Q64-PR	Port-to-Port Data Routers	388
Q16-RR & Q32-RR	Relay Data Routers	389
Q256-SD	SDI Video Router	348
Q6400-N	Analog Video Router	349
Q6400-AA	Analog Audio Router	350-351
Q256-032032-AESB	Q256 32x32 Digital Audio Router (Balanced)	352-353
Q256-032032-AESU	Q256 32x32 Digital Audio Router (Unbalanced)	352-353
S501FR	Standalone Compact High Density Distribution Frame	312
S501FR-RP	Rackmount panel-mounts 3, S501FR enclosures in 1RU rack space	316
S7701FR	Standalone frame (order rear plate, no card) (includes power supply)	64
S7701FR-RP	Rackmount panel-mounts 3, new style S7701FR enclosures in 1RU rack space	64
S7701P	Rear connector plate for Standalone frame (Price applies when ordered separately: discounted when ordered with module)	64
SC-500A	System Controller for small systems	404
SC-1000	System Controller, single processor and single power supply	405
SI-0001	Serial Interface Adapter	407
SI-0004	Q-Link Isolator/Repeater	407
SRF1-16-1x2	16-channel 1x2 splitter/combiner in 1RU chassis	291
SRF1-8-1x4	8-channel 1x4 splitter/combiner in 1RU chassis	291
SRF3-64-1x2	64-channel 1x2 splitter/combiner in 3RU chassis	291
SRF3-32-1x4	32-channel 1x4 splitter/combiner in 3RU chassis	291
TR-3200A	Tally Data Router	390
UV-3	Universal 16/35mm Reader Head	472-473
UVS-3	Universal 16/35mm Reader Head for Sony Telecine	472-473
UVT-3	Universal Touchless 16/35 Reader Head (Consult factory for Cintel Installations)	472-473
UV-TOUCHLESS kit	Touchless option for UV heads	472-473
VLPRO (VistaLINK® PRO)	VistaLINK® PRO SNMP Alarm Monitoring, Email Notification & Configuration (1 client 1 year)	27-32
VLPRO PLUS	VistaLINK® PRO PLUS SNMP Alarm Monitoring, Email Notification & Configuration (1 client 1 year)	27-32
VLPRO PLUS UPGRADE	Upgrade existing VistaLINK® PRO client to VistaLINK® PRO PLUS (1 client 1 year)	27-32
VLPRO-SCH-UPGRADE	Upgrade existing VLPRO to include Automated Configuration & Scheduling software	27-32
VLPRO-WEB1-UPGRADE	Upgrade for existing VLPRO to include remote site VistaLINK® system monitoring	27-32
VLPRO Set-Up &/or Training	VistaLINK® Configuration and Training Session (per diem)	27-32
VLPRO-Ser/Sup/Lic. 1yr	Extra 1yr VistaLINK® PRO-PLUS license & support/client	27-32
VLPRO-Ser/Sup/Lic. 2yr	Extra 2yr VistaLINK® PRO-PLUS license & support/client	27-32
VLPRO-Ser/Sup/Lic. 3yr	Extra 3yr VistaLINK® PRO-PLUS license & support/client	27-32
X-0401H	4x1 HDTV / SDTV video router	362-363
X-0401H-AES4	4x1 HDTV / SDTV video router with 4 levels of AES	362-363
X-0401H-AES4-HES	4x1 HDTV video router with 4 (4x1) AES busses and Embedded SoftSwitch™	362-363
X-0401H-AES4-HSS	4x1 HDTV / SDTV video router with 4 levels of AES with SoftSwitch™	362-363
X-0401X-PANEL	Additional remote control panel (Works in addition to front control panel)	362-363
X-0401S	4x1 SDTV video router	370-371
X-0401S-AES4	4x1 SDTV video router with 4 levels of AES	370-371
X-0401S-AES4-SS	4x1 SDTV video router with 4 levels of AES with SoftSwitch™	370-371
X-0401S-ATSC	4x1 SDI video router with 4 (4x1) AES busses (reclocked)	370-371
X-0601H-444	6x1 HDTV Dual Link Router with Quad 6x1 AES Audio	364-365
X-0601H-444-AES4	6x1 Dual Link HDTV video router with 4 (6x1) AES busses (includes 1 AES breakout panel)	364-365
X-0808-OO	8x8 Optical Router with 8 1310nm Optical Outputs	413
X-0808-OOCWDM	8x8 Optical Router with 8 CWDM (1470nm-1610nm) optical outputs	413
X-1201H	12x1 HDTV video router	366-367
X-1201H-AES	12x1 HDTV video router with 2 (12 x 1) AES busses (includes 1 AES breakout panel)	366-367
X-1201H-AES4	12x1 HDTV video router with 4(12 x 1) AES audio busses (includes 2 AES breakout panels)	366-367

X-1202H	12x2 HDTV video router	368-369
X-1202H-AES	12x2 HDTV video router with 2 (12 x 2) AES busses (includes 1 AES breakout panel)	368-369
X-1202H-AES4	12x2 HDTV video router with 4 (12 x 2) AES audio busses (includes 2 AES breakout panels)	368-369
X-120XH-PANEL	Additional remote control panel (Works in addition to front control panel)	368-369
X-1201S	12x1 SDI video router	372-373
X-1201S-AES	12x1 SDI video router with 2 (12 x 1) AES busses (includes 1 AES breakout panel)	372-373
X-1201S-AES4	12x1 SDI video router with 4 (12 x 1) AES audio busses (includes 2 AES breakout panels)	372-373
X-1202S	12x2 SDI video router	374-375
X-1202S-AES	12x2 SDI video router with 2 (12 x 2) AES busses (includes 1 AES breakout panel)	374-375
X-1202S-AES4	12x2 SDI video router with 4(12 x 2) AES audio busses (includes 2 AES breakout panels)	374-375
X-120XS-PANEL	Additional remote control panel (Works in addition to front control panel)	374-375
X-1201ABO	Unbalanced AES Audio Breakout Panel (for all 1201 series routers)	370-371
X-1201ABOB	Balanced AES Audio Breakout Panel (For all 1200 series routers)	370-371
X-1201ABOB-BP	Balanced AES (with Bypass Relays) Audio Breakout Panels (for all 1201 series routers)	370-371
X-1201ABO-BP	Unbalanced AES (with Bypass Relays) Audio Breakout Panel (For all 1201 series routers)	370-371
X-1202ABO	Unbalanced AES Audio Breakout Panel (for all 1202 series routers)	372-373
X-1202ABOB	Balanced AES Audio Breakout Panel (For all 1202 series routers)	372-373
X-1202ABOB-BP	Balanced AES (with Bypass Relays) Audio Breakout Panels (for all 1202 series routers)	372-373
X-1202ABO-BP	Unbalanced AES (with Bypass Relays) Audio Breakout Panel (For all 1202 series routers)	372-373
X-1616G	16x16 G-Link Router, 16 Electrical Inputs, 16 Electrical Outputs	412
X-1616G-F	16x16 G-Link Router, 16 Electrical Inputs, 16 Fiber Outputs	412
X-1616-OO13	16x16 Optical Router with 16 1310nm optical outputs	413
X-1616-OOCWDM	16x16 Optical Router with 16 CWDM (1270nm-1610nm) optical outputs	413
X-3232-EO13	32x32 Electrical/optical Router with 16 1310nm optical outputs	411
X-3232-EOCWDM	32x32 Electrical/optical Router with 16 CWDM (1270nm-1610nm) optical outputs	411
X-3232G	32x32 G-Link Router, 32 Electrical Inputs, 32 Electrical Outputs	412
X-3232G-F	32x16 G-Link Router, 32 Electrical Inputs, 16 Electrical Outputs	412
XE4-3232S	Xenon 4RU 32x32 to 64x64 Standard Definition Router	346-347
XE4-3232H	Xenon 4RU 32x32 to 64x64 HD Router	346-347
XE8-3232S	Xenon 8RU 32x32 to 128x128 Serial Video Router	346-347
XE8-3232H	Xenon 8RU 32x32 to 128x128 Hi-Def Video Router	346-347
X-NCP2	Router Control Panel	376
XRF1-16x16	1RU 16x16 RF Router	408
XRF1-16x16-LNB	1RU 16x16 RF Router with LNB power supply	408

Warranty & Liability Page

Evertz warrants all of its products manufactured by Evertz against defects in materials and workmanship for a period of one (1) year from the date of the original purchase. If you transfer ownership, this warranty is automatically transferred to the new owner and remains in effect for the original (1) year period.

During the warranty period, we will repair or, at our option, replace at no charge any unit that proves to be defective, provided it is returned after proper authorizationm, with shipping prepaid to an identified Evertz repair center.

This warranty is expressed in lieu of all other warranties including implied warranties of merchntability or fitness. In no event will Evertz be liable for any special incidental or consequential damages.

Evertz's liability under this warranty shall be limited solely to the cost of any necessary repairs to replacements of or refunds of Buyer's purchase price for the Products, components thereof or replacement parts thereof, and Evertz assumes no risk, and shall not in any case be liable for any special, incidental or consequential damages, or any other indirect damages arising from a breach of warranty or contract, negligence or any other legal theory including - without limitation - loss of goodwill, profits or revenue, loss of use of the Products or any associated equipment, cost of capital, cost of any substitute, facilities or services, down-time costs, or claims of any party dealing with Buyer for such damages.

EQX & Xenon Routers

SD/HD/3Gbps Multi-Format Routers - from 32x32 up to 576x576

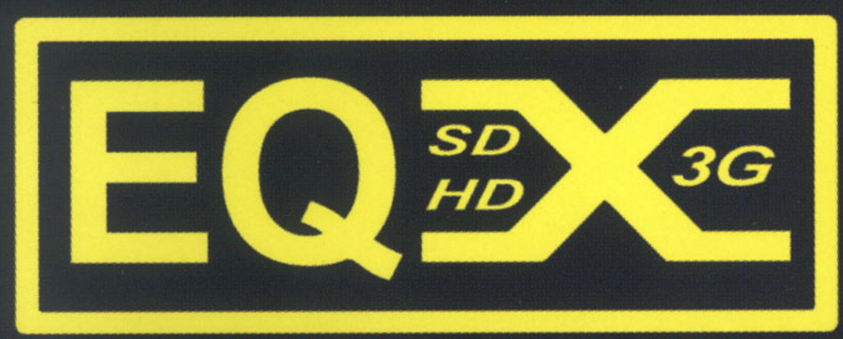

3Gb/s ROUTING

Quartz offers powerful and highly flexible 'Signal Processing' routers essential to your broadcast, production or AV facility. The EQX routing platform can handle up to 576x576 in a single frame. The Xenon is available in 4RU or 8RU with matrix sizes ranging from 32x32 to 128x128.

Corporate Head Office
5288 John Lucas Drive
Burlington, Ontario
Canada, L7L 5Z9
905.335.3700
1.877.995.3700
www.evertz.com

World Wide Sales
sales@evertz.com

Western U.S. Sales
uswestsales@evertz.com

U.S. West Coast Sales
818 558 3910
LAsales@evertz.com

Washington D.C. Sales
703 330 8600
dcsales@evertz.com

New York Sales
newyorksales@evertz.com

UK Sales / Quartz
+44 (0) 118 935 0200
uksales@evertz.com

Asia Pacific Sales
asiapacificsales@evertz.com

2007/2008 Broadcast Pages